REV.	ECN NO.	DATE	SIGN	DESCRIPTION
B	LEN-8B0363	2008/09/17	Shin	Add Note
C	LEN1540245	2014/12/23	Jinhai	Change Logo

ALTW CONFIDENTIAL 2014-12-23 R&D DEPT.

ALTW DCC. DEPT. CONFIDENTIAL 2015.05.04 ISSUED

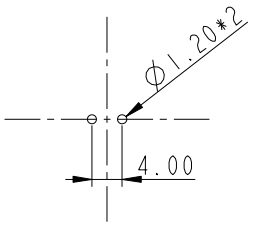

2Pin Male Connector
Male Pin PCB Layout

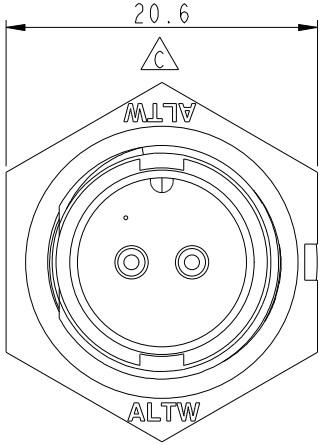

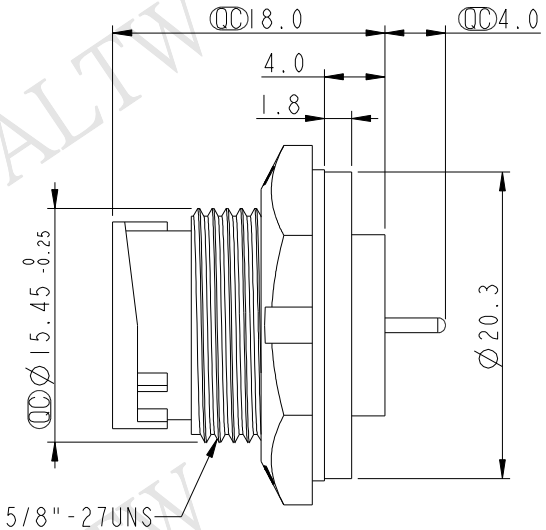

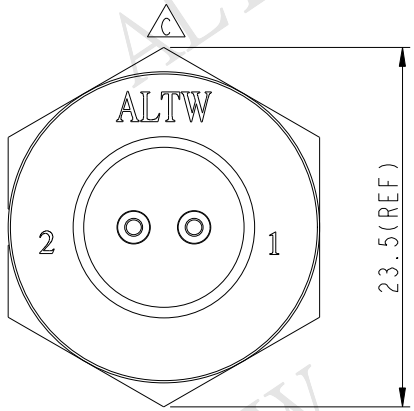

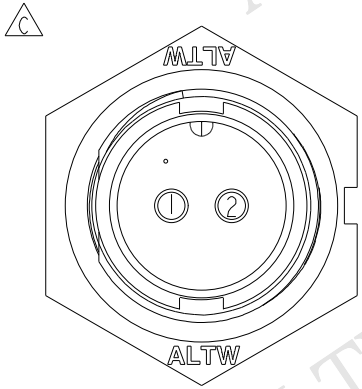

Pin Assignments
Front View

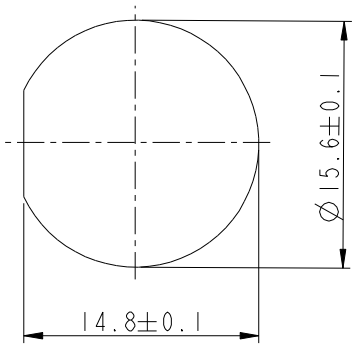

Recommended Panel Cut-out

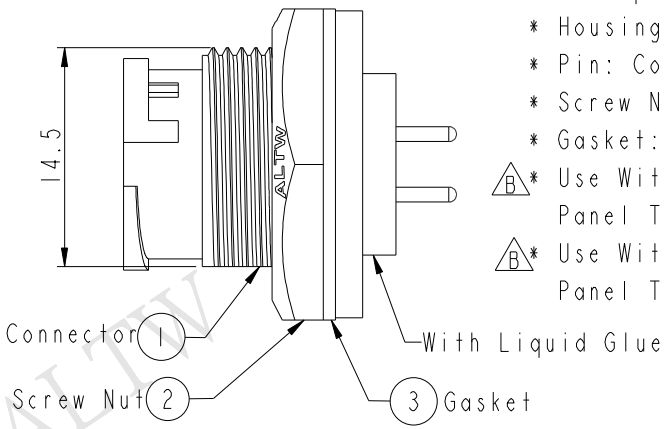

Note:
* QC Important Dimension To Check.
* Waterproof Rate: IP67
* Housing: Nylon+GF, Black
* Pin: Copper Alloy, Gold Plated
* Screw Nut: Nylon+GF, Black
* Gasket: EPDM, Black
* B Use With Waterproof Cap Or Dust Cap
  Panel Thickness Max: 3.0mm
* B Use Without Waterproof Cap Or Dust Cap
  Panel Thickness Max: 4.5mm

UNIT: mm

TOLERANCE
.X ±0.25
.XX ±0.1
.XXX ±0.05
ANGLES ±1°

TITLE	Standard Panel Lock 2Pin M Conn M Pin		
SCALE 2:1	SIZE A4	SHEET 1 OF 1	
REV. C	WC-REV. A.2	QC: Inspection item	

Amphenol LTW
安費諾亮泰企業股份有限公司

ITEM NO BD-02PMMP-LC7001	DRAWN BY Jinhai	DATE 2014-12-23
DWG NO BD-02PMMP-LC7001	CHECKED BY Tom	DATE 2014-12-23
CUSTOMER ALTW	APPROVED BY Jerry	DATE 2014-12-23

FMW10702-01-02A1

THIS DOCUMENT IS SUBJECT TO CHANGE WITHOUT NOTICE. IT IS CONFIDENTIAL AND A PROPERTY OF Amphenol LTW. DISCLOSURE TO THIRD PARTY HAS TO BE AUTHORIZED BY Amphenol LTW.