S34MS08G2 NAND Flash Memory for Embedded

8 Gb, 4-Bit ECC, x8 I/O and 1.8V V_{CC}

Data Sheet *(Advance Information)*

Notice to Readers: This document states the current technical specifications regarding the Spansion product(s) described herein. Each product described herein may be designated as Advance Information, Preliminary, or Full Production. See *Notice On Data Sheet Designations* for definitions.

Publication Number S34MS08G2 **Revision** 02 **Issue Date** September 25, 2014

Notice On Data Sheet Designations

Spansion Inc. issues data sheets with Advance Information or Preliminary designations to advise readers of product information or intended specifications throughout the product life cycle, including development, qualification, initial production, and full production. In all cases, however, readers are encouraged to verify that they have the latest information before finalizing their design. The following descriptions of Spansion data sheet designations are presented here to highlight their presence and definitions.

Advance Information

The Advance Information designation indicates that Spansion Inc. is developing one or more specific products, but has not committed any design to production. Information presented in a document with this designation is likely to change, and in some cases, development on the product may discontinue. Spansion Inc. therefore places the following conditions upon Advance Information content:

> "This document contains information on one or more products under development at Spansion Inc. The information is intended to help you evaluate this product. Do not design in this product without contacting the factory. Spansion Inc. reserves the right to change or discontinue work on this proposed product without notice."

Preliminary

The Preliminary designation indicates that the product development has progressed such that a commitment to production has taken place. This designation covers several aspects of the product life cycle, including product qualification, initial production, and the subsequent phases in the manufacturing process that occur before full production is achieved. Changes to the technical specifications presented in a Preliminary document should be expected while keeping these aspects of production under consideration. Spansion places the following conditions upon Preliminary content:

> "This document states the current technical specifications regarding the Spansion product(s) described herein. The Preliminary status of this document indicates that product qualification has been completed, and that initial production has begun. Due to the phases of the manufacturing process that require maintaining efficiency and quality, this document may be revised by subsequent versions or modifications due to changes in technical specifications."

Combination

Some data sheets contain a combination of products with different designations (Advance Information, Preliminary, or Full Production). This type of document distinguishes these products and their designations wherever necessary, typically on the first page, the ordering information page, and pages with the DC Characteristics table and the AC Erase and Program table (in the table notes). The disclaimer on the first page refers the reader to the notice on this page.

Full Production (No Designation on Document)

When a product has been in production for a period of time such that no changes or only nominal changes are expected, the Preliminary designation is removed from the data sheet. Nominal changes may include those affecting the number of ordering part numbers available, such as the addition or deletion of a speed option, temperature range, package type, or V_{IO} range. Changes may also include those needed to clarify a description or to correct a typographical error or incorrect specification. Spansion Inc. applies the following conditions to documents in this category:

> "This document states the current technical specifications regarding the Spansion product(s) described herein. Spansion Inc. deems the products to have been in sufficient production volume such that subsequent versions of this document are not expected to change. However, typographical or specification corrections, or modifications to the valid combinations offered may occur."

Questions regarding these document designations may be directed to your local sales office.

S34MS08G2 NAND Flash Memory for Embedded

8 Gb, 4-Bit ECC, x8 I/O and 1.8V V_{CC}

Data Sheet *(Advance Information)*

General Description

The Spansion® S34MS08G2 8-Gb NAND is offered in 1.8V_{CC} with x8 I/O interface. This document contains information for the S34MS08G2 device, which is a dual-die stack of two S34MS04G2 die. For detailed specifications, please refer to the discrete die data sheet: S34MS01G2_04G2.

Distinctive Characteristics

- **Density**
  - 8 Gb (4 Gb x 2)
- **Architecture (For each 4 Gb device)**
  - Input / Output Bus Width: 8-bits
  - Page Size: (2048 + 128) bytes; 128-byte spare area
  - Block Size: 64 Pages or (128k + 8k) bytes
  - Plane Size
    - 2048 Blocks per Plane or (256M + 16M) bytes
  - Device Size
    - 2 Planes per Device or 512 Mbyte
- **NAND Flash Interface**
  - Open NAND Flash Interface (ONFI) 1.0 compliant
  - Address, Data and Commands multiplexed
- **Supply Voltage**
  - 1.8V device: V_{CC} = 1.7V ~ 1.95V
- **Security**
  - One Time Programmable (OTP) area
  - Serial number (unique ID)
  - Hardware program/erase disabled during power transition
- **Additional Features**
  - Supports Multiplane Program and Erase commands
  - Supports Copy Back Program
  - Supports Multiplane Copy Back Program
  - Supports Read Cache
- **Electronic Signature**
  - Manufacturer ID: 01h
- **Operating Temperature**
  - Industrial: -40°C to 85°C

Performance

- **Page Read / Program**
  - Random access: 30 µs (Max)
  - Sequential access: 45 ns (Min)
  - Program time / Multiplane Program time: 300 µs (Typ)
- **Block Erase / Multiplane Erase**
  - Block Erase time: 3.5 ms (Typ)
- **Reliability**
  - 100,000 Program / Erase cycles (Typ) (with 4-bit ECC per 528 bytes)
  - 10 Year Data retention (Typ)
  - Blocks zero and one are valid and will be valid for at least 1000 program-erase cycles with ECC
- **Package Options**
  - Lead Free and Low Halogen
  - 63-Ball BGA 9 x 11 x 1 mm

Publication Number S34MS08G2 **Revision** 02 **Issue Date** September 25, 2014

Table of Contents

1. Connection Diagram

Figure 1.1 63-BGA Contact, x8 Device, Single CE (Top View)

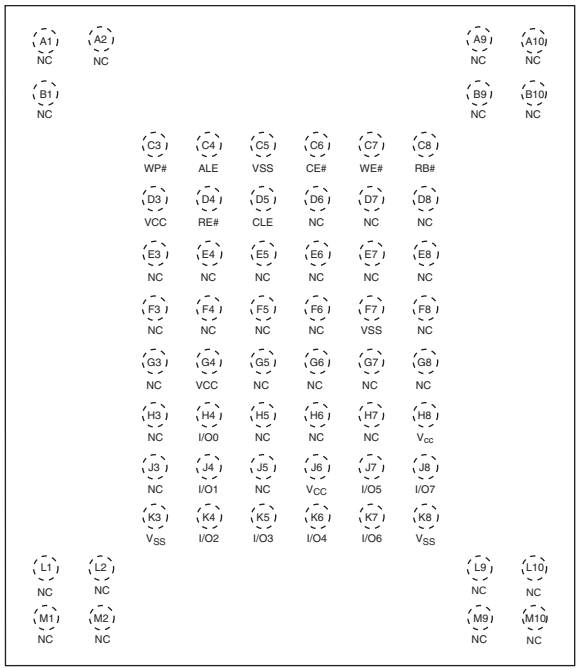

Note:

1. *These pins should be connected to power supply or ground (as designated) following the ONFI specification, however they might not be bonded internally.*

2. Pin Description

Table 2.1 Pin Description

Pin Name	Description
I/O0 - I/O7	**Inputs/Outputs**. The I/O pins are used for command input, address input, data input, and data output. The I/O pins float to High-Z when the device is deselected or the outputs are disabled.
CLE	**Command Latch Enable.** This input activates the latching of the I/O inputs inside the Command Register on the rising edge of Write Enable (WE#).
ALE	**Address Latch Enable.** This input activates the latching of the I/O inputs inside the Address Register on the rising edge of Write Enable (WE#).
CE#	**Chip Enable.** This input controls the selection of the device. When the device is not busy CE# low selects the memory.
WE#	**Write Enable.** This input latches Command, Address and Data. The I/O inputs are latched on the rising edge of WE#.
RE#	**Read Enable.** The RE# input is the serial data-out control, and when active drives the data onto the I/O bus. Data is valid t_{REA} after the falling edge of RE# which also increments the internal column address counter by one.
WP#	**Write Protect.** The WP# pin, when low, provides hardware protection against undesired data modification (program / erase).
R/B#	**Ready Busy**. The Ready/Busy output is an Open Drain pin that signals the state of the memory.
VCC	**Supply Voltage**. The V_{CC} supplies the power for all the operations (Read, Program, Erase). An internal lock circuit prevents the insertion of Commands when V_{CC} is less than V_{LKO}.
VSS	**Ground.**
NC	**Not Connected.**

Notes:

1. *A 0.1 µF capacitor should be connected between the V_{CC} Supply Voltage pin and the V_{SS} Ground pin to decouple the current surges from the power supply. The PCB track widths must be sufficient to carry the currents required during program and erase operations.*
2. *An internal voltage detector disables all functions whenever V_{CC} is below 1.1V to protect the device from any involuntary program/erase during power transitions.*

3. Block Diagrams

Figure 3.1 Functional Block Diagram — 8 Gb

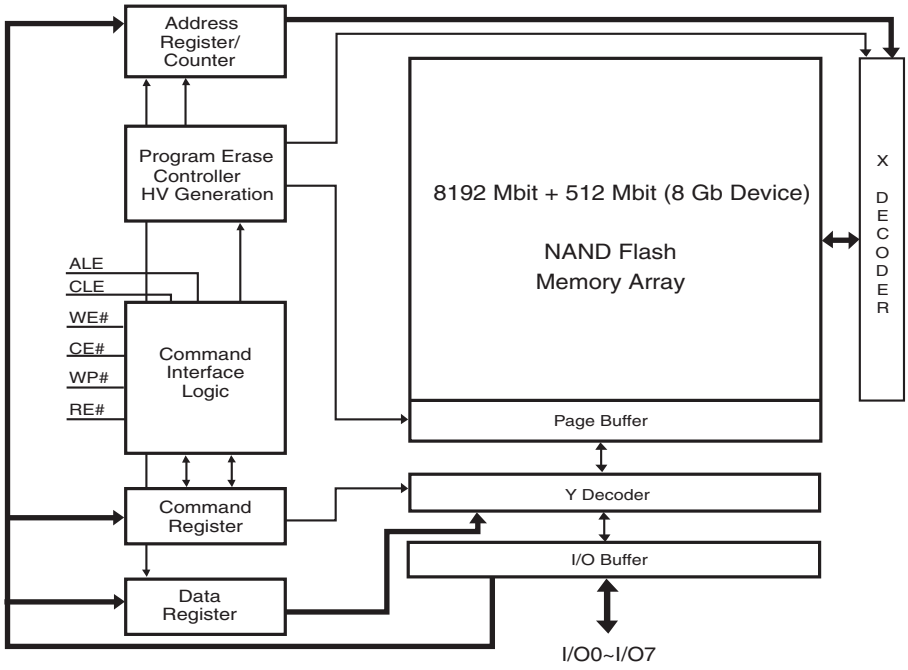

Figure 3.2 Block Diagram — 1 CE (4 Gb x 8)

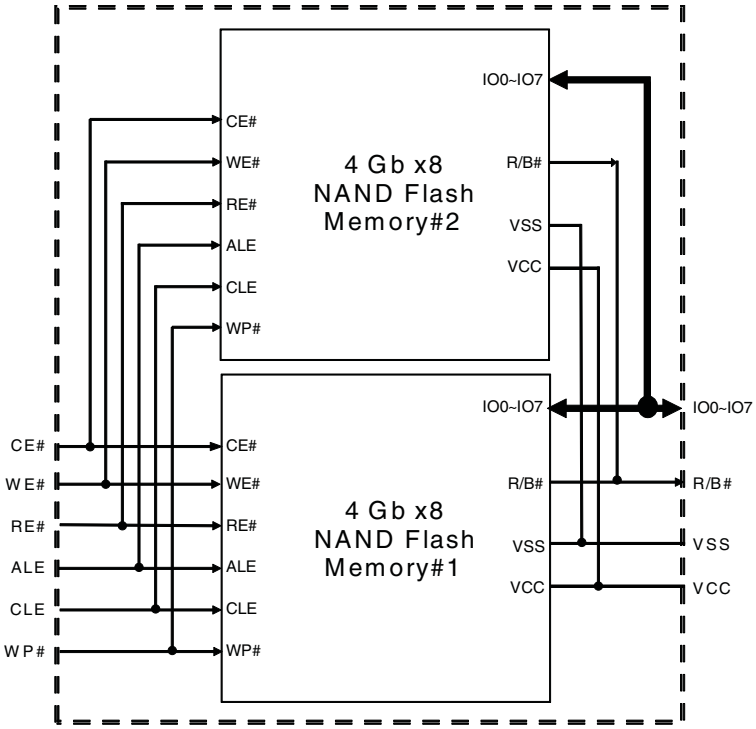

4. Addressing

Table 4.1 Address Cycle Map

Bus Cycle	I/O0	I/O1	I/O2	I/O3	I/O4	I/O5	I/O6	I/O7
1st / Col. Add. 1	A0 (CA0)	A1 (CA1)	A2 (CA2)	A3 (CA3)	A4 (CA4)	A5 (CA5)	A6 (CA6)	A7 (CA7)
2nd / Col. Add. 2	A8 (CA8)	A9 (CA9)	A10 (CA10)	A11 (CA11)	Low	Low	Low	Low
3rd / Row Add. 1	A12 (PA0)	A13 (PA1)	A14 (PA2)	A15 (PA3)	A16 (PA4)	A17 (PA5)	A18 (PLA0)	A19 (BA0)
4th / Row Add. 2	A20 (BA1)	A21 (BA2)	A22 (BA3)	A23 (BA4)	A24 (BA5)	A25 (BA6)	A26 (BA7)	A27 (BA8)
5th / Row Add. 3 (6)	A28 (BA9)	A29 (BA10)	A30 (BA11)	Low	Low	Low	Low	Low

Notes:

1. *CAx = Column Address bit.*
2. *PAx = Page Address bit.*
3. *PLA0 = Plane Address bit zero.*
4. *BAx = Block Address bit.*
5. *Block address concatenated with page address and plane address = actual page address, also known as the row address.*
6. *A30 for 8 Gb (4 Gb x 2 – DDP) (1CE).*

For the address bits, the following rules apply:

- A0 - A11: column address in the page
- A12 - A17: page address in the block
- A18: plane address (for multiplane operations) / block address (for normal operations)
- A19 - A30: block address

5. Read Status Enhanced

Read Status Enhanced is used to retrieve the status value for a previous operation in the following cases:

- In the case of concurrent operations on a multi-die stack.

  When two dies are stacked to form a dual-die package (DDP), it is possible to run one operation on the first die, then activate a different operation on the second die, for example: Erase while Read, Read while Program, etc.
- In the case of multiplane operations in the same die.

6. Read ID

The device contains a product identification mode, initiated by writing 90h to the command register, followed by an address input of 00h.

Note: If you want to execute Read Status command (0x70) after Read ID sequence, you should input dummy command (0x00) before Read Status command (0x70).

For the S34MS08G2 device, five read cycles sequentially output the manufacturer code (01h), and the device code and 3rd, 4th, and 5th cycle ID, respectively. The command register remains in Read ID mode until further commands are issued to it.

Table 6.1 Read ID for Supported Configurations

Density	Org	V_{CC}	1st	2nd	3rd	4th	5th
4 Gb	x8	1.8V	01h	ACh	90h	15h	56h
8 Gb (4 Gb x 2 – DDP with one CE#)	x8	1.8V	01h	A3h	D1h	15h	5Ah

Figure 6.1 Read ID Operation Timing — 8 Gb

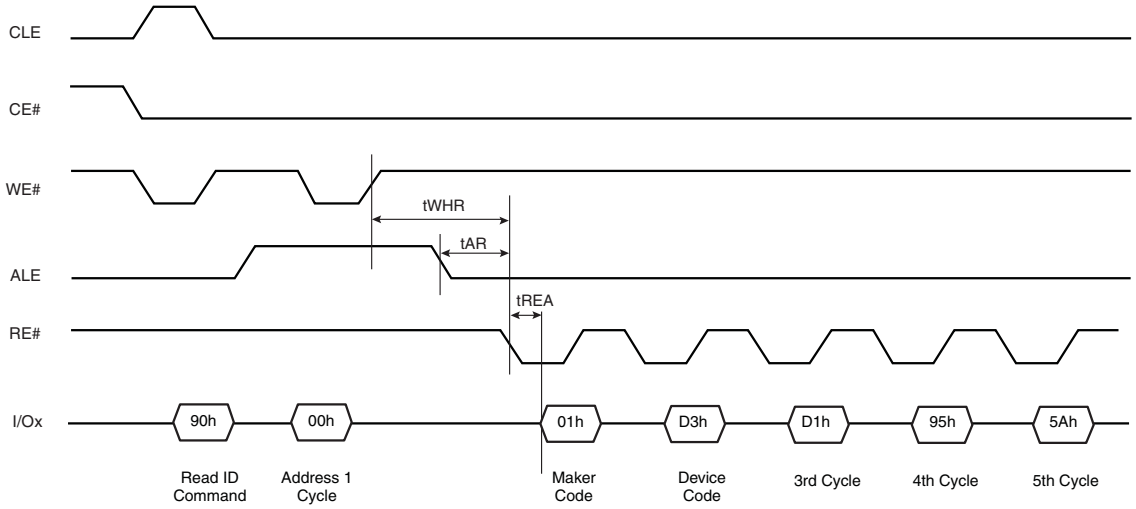

5th ID Data

Table 6.2 Read ID Byte 5 Description

	Description	I/O7	I/O6 I/O5 I/O4	I/O3 I/O2	I/O1 I/O0
ECC Level	1 bit / 512 bytes				0 0
	2 bit / 512 bytes				0 1
	4 bit / 512 bytes				1 0
	8 bit / 512 bytes				1 1
Plane Number	1			0 0	
	2			0 1	
	4			1 0	
	8			1 1	
Plane Size (without spare area)	64 Mb		0 0 0		
	128 Mb		0 0 1		
	256 Mb		0 1 0		
	512 Mb		0 1 1		
	1 Gb		1 0 0		
	2 Gb		1 0 1		
	4 Gb		1 1 0		
Reserved		0			

6.1 Read Parameter Page

The device supports the ONFI Read Parameter Page operation, initiated by writing ECh to the command register, followed by an address input of 00h. The command register remains in Parameter Page mode until further commands are issued to it. Table 6.3 explains the parameter fields.

Table 6.3 Parameter Page Description (Sheet 1 of 2)

Byte	O/M	Description	Values
Revision Information and Features Block			
0-3	M	Parameter page signature Byte 0: 4Fh, “O” Byte 1: 4Eh, “N” Byte 2: 46h, “F” Byte 3: 49h, “I”	4Fh, 4Eh, 46h, 49h
4-5	M	Revision number 2-15 Reserved (0) 1 1 = supports ONFI version 1.0 0 Reserved (0)	02h, 00h
6-7	M	Features supported 5-15 Reserved (0) 4 1 = supports odd to even page Copyback 3 1 = supports interleaved operations 2 1 = supports non-sequential page programming 1 1 = supports multiple LUN operations 0 1 = supports 16-bit data bus width	1Eh, 00h
8-9	M	Optional commands supported 6-15 Reserved (0) 5 1 = supports Read Unique ID 4 1 = supports Copyback 3 1 = supports Read Status Enhanced 2 1 = supports Get Features and Set Features 1 1 = supports Read Cache commands 0 1 = supports Page Cache Program command	3Bh, 00h
10-31		Reserved (0)	00h
Manufacturer Information Block			
32-43	M	Device manufacturer (12 ASCII characters)	53h, 50h, 41h, 4Eh, 53h, 49h, 4Fh, 4Eh, 20h, 20h, 20h, 20h
44-63	M	Device model (20 ASCII characters)	53h, 33h, 34h, 4Dh, 53h, 30h, 38h, 47h, 32h, 20h, 20h, 20h, 20h, 20h, 20h, 20h, 20h, 20h, 20h, 20h
64	M	JEDEC manufacturer ID	01h
65-66	O	Date code	00h
67-79		Reserved (0)	00h
Memory Organization Block			
80-83	M	Number of data bytes per page	00h, 08h, 00h, 00h
84-85	M	Number of spare bytes per page	80h, 00h
86-89	M	Number of data bytes per partial page	00h, 00h, 00h, 00h
90-91	M	Number of spare bytes per partial page	00h, 00h
92-95	M	Number of pages per block	40h, 00h, 00h, 00h
96-99	M	Number of blocks per logical unit (LUN)	00h, 20h, 00h, 00h
100	M	Number of logical units (LUNs)	01h
101	M	Number of address cycles 4-7 Column address cycles 0-3 Row address cycles	23h
102	M	Number of bits per cell	01h
103-104	M	Bad blocks maximum per LUN	A3h, 00h
105-106	M	Block endurance	01h, 05h
107	M	Guaranteed valid blocks at beginning of target	01h
108-109	M	Block endurance for guaranteed valid blocks	01h, 03h

Table 6.3 Parameter Page Description (Sheet 2 of 2)

Byte	O/M	Description	Values
110	M	Number of programs per page	04h
111	M	Partial programming attributes 5-7 Reserved 4 1 = partial page layout is partial page data followed by partial page spare 1-3 Reserved 0 1 = partial page programming has constraints	00h
112	M	Number of bits ECC correctability	04h
113	M	Number of interleaved address bits 4-7 Reserved (0) 0-3 Number of interleaved address bits	01h
114	O	Interleaved operation attributes 4-7 Reserved (0) 3 Address restrictions for program cache 2 1 = program cache supported 1 1 = no block address restrictions 0 Overlapped / concurrent interleaving support	04h
115-127		Reserved (0)	00h
Electrical Parameters Block			
128	M	I/O pin capacitance	0Ah
129-130	M	Timing mode support 6-15 Reserved (0) 5 1 = supports timing mode 5 4 1 = supports timing mode 4 3 1 = supports timing mode 3 2 1 = supports timing mode 2 1 1 = supports timing mode 1 0 1 = supports timing mode 0, shall be 1	03h, 00h
131-132	O	Program cache timing mode support 6-15 Reserved (0) 5 1 = supports timing mode 5 4 1 = supports timing mode 4 3 1 = supports timing mode 3 2 1 = supports timing mode 2 1 1 = supports timing mode 1 0 1 = supports timing mode 0	03h, 00h
133-134	M	t_{PROG} Maximum page program time (µs)	BCh, 02h
135-136	M	t_{BERS} Maximum block erase time (µs)	10h, 27h
137-138	M	t_R Maximum page read time (µs)	1Eh, 00h
139-140	M	t_{CCS} Minimum Change Column setup time (ns)	C8h, 00h
141-163		Reserved (0)	00h
Vendor Block			
164-165	M	Vendor specific Revision number	00h
166-253		Vendor specific	00h
254-255	M	Integrity CRC	18h, C2h
Redundant Parameter Pages			
256-511	M	Value of bytes 0-255	Repeat Value of bytes 0-255
512-767	M	Value of bytes 0-255	Repeat Value of bytes 0-255
768+	O	Additional redundant parameter pages	FFh

Note:
1. "O" Stands for Optional, "M" for Mandatory.

7. Electrical Characteristics

7.1 Valid Blocks

Table 7.1 Valid Blocks

Device	Symbol	Min	Typ	Max	Unit
S34MS04G2	N_{VB}	4016	—	4096	Blocks
S34MS08G2	N_{VB}	8032 (1)	—	8192	Blocks

Note:
1. *Each 4 Gb has maximum 80 bad blocks.*

7.2 DC Characteristics

Table 7.2 DC Characteristics and Operating Conditions

Parameter		Symbol	Test Conditions	Min	Typ	Max	Units
Power On Current		I_{CC0}	FFh command input after power on	—	—	50 per device	mA
Operating Current	Sequential Read	I_{CC1}	$t_{RC} = t_{RC}$ (min) CE# = V_{IL}, I_{OUT} = 0 mA	—	15	30	mA
	Program	I_{CC2}	Normal	—	15	30	mA
			Cache	—	15	30	mA
	Erase	I_{CC3}	—	—	15	30	mA
Standby Current, (TTL)		I_{CC4}	CE# = V_{IH}, WP# = 0V/Vcc	—	—	1	mA
Standby Current, (CMOS)		I_{CC5}	CE# = V_{CC}-0.2, WP# = 0/V_{CC}	—	10	50	µA
Input Leakage Current		I_{LI}	V_{IN} = 0 to V_{CC}(max)	—	—	±10	µA
Output Leakage Current		I_{LO}	V_{OUT} = 0 to V_{CC}(max)	—	—	±10	µA
Input High Voltage		V_{IH}	—	V_{CC} x 0.8	—	V_{CC} + 0.3	V
Input Low Voltage		V_{IL}	—	-0.3	—	V_{CC} x 0.2	V
Output High Voltage		V_{OH}	I_{OH} = -400 µA	2.4	—	—	V
Output Low Voltage		V_{OL}	I_{OL} = 2.1 mA	—	—	0.4	V
Output Low Current (R/B#)		$I_{OL(R/B\#)}$	V_{OL} = 0.4V	8	10	—	mA
V_{CC} Supply Voltage (erase and program lockout)		V_{LKO}	—	—	1.8	—	V

Notes:
1. *All V_{CCQ} and V_{CC} pins, and V_{SS} and V_{SSQ} pins respectively are shorted together.*
2. *Values listed in this table refer to the complete voltage range for V_{CC} and V_{CCQ} and to a single device in case of device stacking.*
3. *All current measurements are performed with a 0.1 µF capacitor connected between the V_{CC} Supply Voltage pin and the V_{SS} Ground pin.*
4. *Standby current measurement can be performed after the device has completed the initialization process at power up.*

7.3 Pin Capacitance

Table 7.3 Pin Capacitance (TA = 25°C, f=1.0 MHz)

Parameter	Symbol	Test Condition	Min	Max	Unit
Input	C_{IN}	V_{IN} = 0V	—	10	pF
Input / Output	C_{IO}	V_{IL} = 0V	—	10	pF

Note:
1. *For the stacked devices version the Input is 10 pF x [number of stacked chips] and the Input/Output is 10 pF x [number of stacked chips].*

7.4 Power Consumptions and Pin Capacitance for Allowed Stacking Configurations

When multiple dies are stacked in the same package, the power consumption of the stack will increase according to the number of chips. As an example, the standby current is the sum of the standby currents of all the chips, while the active power consumption depends on the number of chips concurrently executing different operations.

When multiple dies are stacked in the same package the pin/ball capacitance for the single input and the single input/output of the combo package must be calculated based on the number of chips sharing that input or that pin/ball.

8. Physical Interface

8.1 Physical Diagram

8.1.1 63-Pin Ball Grid Array (BGA)

Figure 8.1 VLD063 — 63-Pin BGA, 11 mm x 9 mm Package

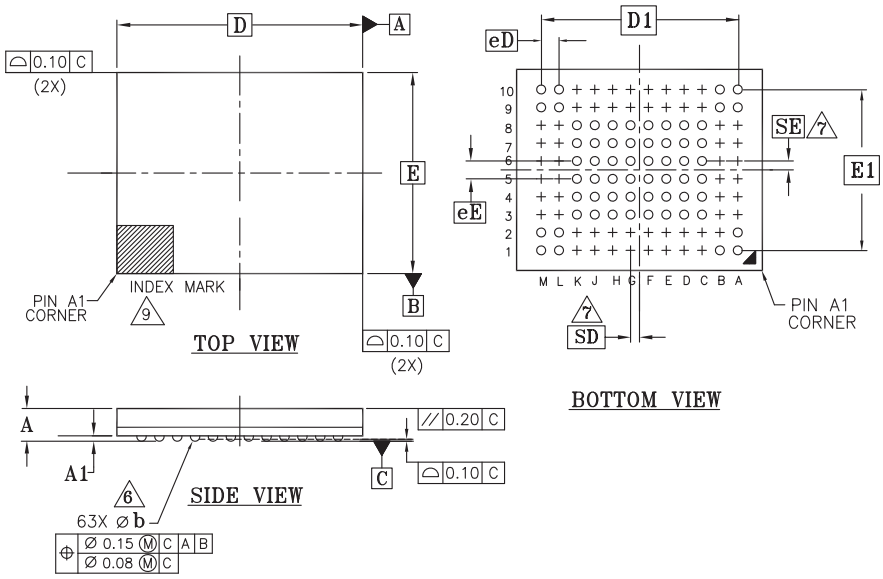

PACKAGE	VLD 063			
JEDEC	M0-207(M)			
	11.00 mm x 9.00 mm PACKAGE			
SYMBOL	MIN	NOM	MAX	NOTE
A	---	---	1.00	PROFILE
A1	0.25	---	---	BALL HEIGHT
D	11.00 BSC.			BODY SIZE
E	9.00 BSC.			BODY SIZE
D1	8.80 BSC.			MATRIX FOOTPRINT
E1	7.20 BSC.			MATRIX FOOTPRINT
MD	12			MATRIX SIZE D DIRECTION
ME	10			MATRIX SIZE E DIRECTION
n	63			BALL COUNT
ø b	0.40	0.45	0.50	BALL DIAMETER
eE	0.80 BSC.			BALL PITCH
eD	0.80 BSC.			BALL PITCH
SD	0.40 BSC.			SOLDER BALL PLACEMENT
SE	0.40 BSC.			SOLDER BALL PLACEMENT
	A3-A8,B2-B8,C1,C2,C9,C10 D1,D2,D9,D10,E1,E2,E9,E10 F1,F2,F9,F10,G1,G2,G9,G10 H1,H2,H9,H10,J1,J2,J9,J10 K1,K2,K9,K10 L3-L8,M3-M8			DEPOPULATED SOLDER BALLS

NOTES:

1. DIMENSIONING AND TOLERANCING METHODS PER ASME Y14.5M-1994.
2. ALL DIMENSIONS ARE IN MILLIMETERS.
3. BALL POSITION DESIGNATION PER JEP95, SECTION 3, SPP-020.
4. e REPRESENTS THE SOLDER BALL GRID PITCH.
5. SYMBOL "MD" IS THE BALL MATRIX SIZE IN THE "D" DIRECTION.

   SYMBOL "ME" IS THE BALL MATRIX SIZE IN THE "E" DIRECTION.

   n IS THE TOTAL NUMBER OF POPULATED SOLDER BALL POSITIONS FOR MATRIX SIZE MD X ME.

6. DIMENSION "b" IS MEASURED AT THE MAXIMUM BALL DIAMETER IN A PLANE PARALLEL TO DATUM C.
7. "SD" AND "SE" ARE MEASURED WITH RESPECT TO DATUMS A AND B AND DEFINE THE POSITION OF THE CENTER SOLDER BALL IN THE OUTER ROW.

   WHEN THERE IS AN ODD NUMBER OF SOLDER BALLS IN THE OUTER ROW "SD" OR "SE" = 0.

   WHEN THERE IS AN EVEN NUMBER OF SOLDER BALLS IN THE OUTER ROW, "SD" = eD/2 AND "SE" = eE/2.

8. "+" INDICATES THE THEORETICAL CENTER OF DEPOPULATED BALLS.
9. A1 CORNER TO BE IDENTIFIED BY CHAMFER, LASER OR INK MARK, METALLIZED MARK INDENTATION OR OTHER MEANS.

g5013 \ 16-038.28 \ 6.5.13

9. Ordering Information

The ordering part number is formed by a valid combination of the following:

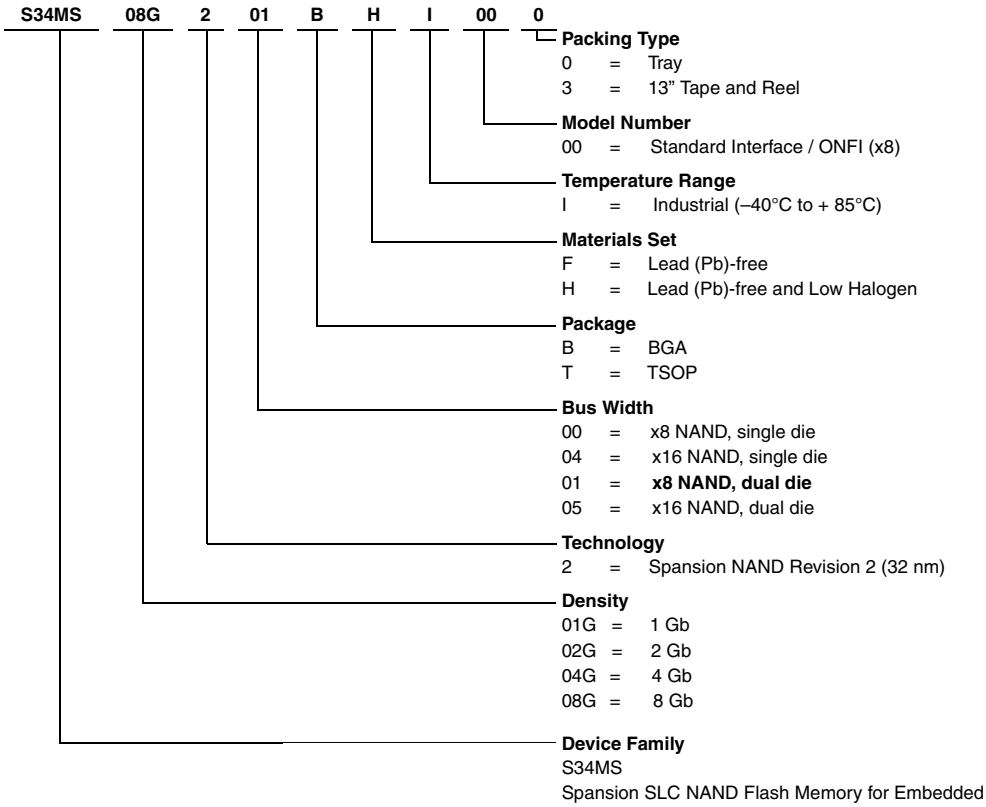

Valid Combinations

Valid Combinations list configurations planned to be supported in volume for this device. Consult your local sales office to confirm availability of specific valid combinations and to check on newly released combinations.

Valid Combinations								
Device Family	Density	Technology	Bus Width	Package Type	Temperature Range	Additional Ordering Options	Packing Type	Package Description
S34MS	08G	2	01	BH	I	00	0, 3	BGA

10. Revision History

Section	Description
Revision 01 (August 4, 2014)	
	Initial release
Revision 02 (September 25, 2014)	
Read Parameter Page	Parameter Page Description table: updated values for bytes 96-99, 100, 103-104, 254-255

Colophon

The products described in this document are designed, developed and manufactured as contemplated for general use, including without limitation, ordinary industrial use, general office use, personal use, and household use, but are not designed, developed and manufactured as contemplated (1) for any use that includes fatal risks or dangers that, unless extremely high safety is secured, could have a serious effect to the public, and could lead directly to death, personal injury, severe physical damage or other loss (i.e., nuclear reaction control in nuclear facility, aircraft flight control, air traffic control, mass transport control, medical life support system, missile launch control in weapon system), or (2) for any use where chance of failure is intolerable (i.e., submersible repeater and artificial satellite). Please note that Spansion will not be liable to you and/or any third party for any claims or damages arising in connection with above-mentioned uses of the products. Any semiconductor devices have an inherent chance of failure. You must protect against injury, damage or loss from such failures by incorporating safety design measures into your facility and equipment such as redundancy, fire protection, and prevention of over-current levels and other abnormal operating conditions. If any products described in this document represent goods or technologies subject to certain restrictions on export under the Foreign Exchange and Foreign Trade Law of Japan, the US Export Administration Regulations or the applicable laws of any other country, the prior authorization by the respective government entity will be required for export of those products.

Trademarks and Notice

The contents of this document are subject to change without notice. This document may contain information on a Spansion product under development by Spansion. Spansion reserves the right to change or discontinue work on any product without notice. The information in this document is provided as is without warranty or guarantee of any kind as to its accuracy, completeness, operability, fitness for particular purpose, merchantability, non-infringement of third-party rights, or any other warranty, express, implied, or statutory. Spansion assumes no liability for any damages of any kind arising out of the use of the information in this document.