2.5A SINGLE CHANNEL CURRENT-LIMITED POWER SWITCH

Description

The AP2501 and AP2511 are single channel current-limited integrated high-side power switches optimized for Universal Serial Bus (USB) and other hot-swap applications. The family of devices complies with USB standards and is available with both polarities of Enable input.

The devices have fast short-circuit response time for improved overall system robustness, and have integrated output discharge function to ensure completely controlled discharging of the output voltage capacitor. They provide a complete protection solution for applications subject to heavy capacitive loads and the prospect of short circuit, and offer reverse current blocking, over-current, over-temperature and short-circuit protection, as well as controlled rise time and under-voltage lockout functionality. A 7ms deglitch capability on the open-drain Flag output prevents false over-current reporting and does not require any external components.

All devices are available in SO-8, MSOP-8, MSOP-8EP, U-DFN3030-8 and U-DFN2020-6 packages.

Pin Assignments

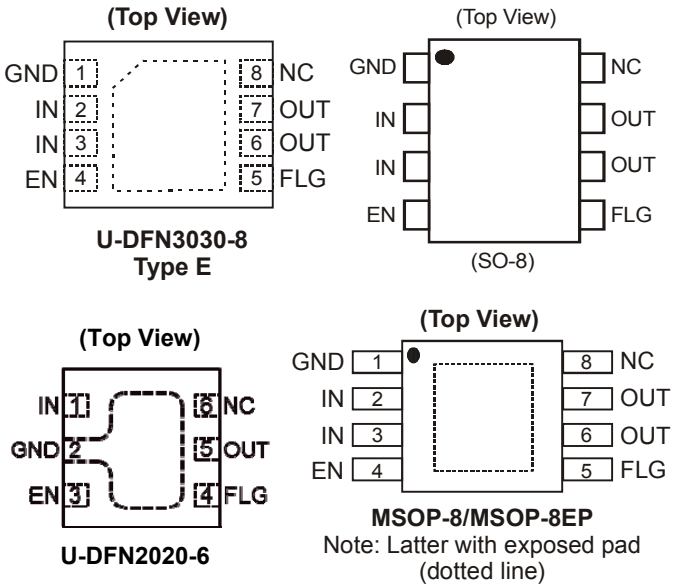

Features

- Single channel current-limited power switch
- Output discharge function
- Fast short-circuit response time: 2µs
- 3.7A accurate current limiting (typ)
- Reverse current blocking
- 70mΩ on-resistance (typ)
- Input voltage range: 2.7V – 5.5V
- Built-in soft-start with 0.6ms typical rise time
- Over-current and thermal protection
- Fault report (FLG) with blanking time (7ms typ)
- ESD protection: 2kV HBM, 200V MM
- Active low (AP2501) or active high (AP2511) enable
- Ambient temperature range: -40°C to +85°C
- SO-8, MSOP-8, MSOP-8EP, U-DFN3030-8 and U-DFN2020-6: Available in “Green” Molding Compound (No Br, Sb)
  - **Lead-Free Finish; RoHS Compliant (Notes 1 & 2)**
  - **Halogen and Antimony Free. “Green” Device (Note 3)**
- UL Recognized, File Number E322375
- IEC60950-1 CB Scheme Certified

Applications

- LCD TVs & Monitors
- Set-Top-Boxes, Residential Gateways
- Laptops, Desktops, Servers, e-Readers
- Printers, Docking Stations, HUBs

Notes:
1. EU Directive 2002/95/EC (RoHS) & 2011/65/EU (RoHS 2) compliant. All applicable RoHS exemptions applied.
2. See http://www.diodes.com/quality/lead_free.html for more information about Diodes Incorporated’s definitions of Halogen- and Antimony-free, "Green" and Lead-free.
3. Halogen- and Antimony-free "Green” products are defined as those which contain <900ppm bromine, <900ppm chlorine (<1500ppm total Br + Cl) and <1000ppm antimony compounds.

© Diodes Incorporated

Typical Applications Circuit

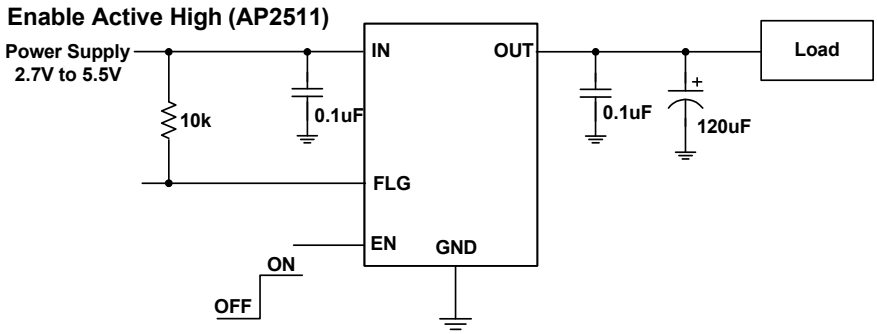

Available Options

Part Number	Channel	Enable Pin (EN)	Recommended Maximum Continuous Load Current (A)	Typical Current Limit (A)	Package
AP2501	1	Active Low	2.5A	3.7A	SO-8 MSOP-8 MSOP-8EP U-DFN3030-8 U-DFN2020-6
AP2511	1	Active High			

Pin Descriptions

Pin Name	Pin Number			Function
	MSOP-8EP, U-DFN3030-8	SO-8, MSOP-8	U-DFN2020-6	
GND	1	1	2	Ground
IN	2, 3	2, 3	1	Voltage Input Pin. Connect a 0.1μF or larger ceramic capacitor from IN to GND as close as possible. (all IN pins must be tied together externally)
EN	4	4	3	Enable Input. Active low (AP2501) or active high (AP2511).
FLG	5	5	4	Over-temperature and over-current fault reporting with 7ms deglitch; active low open-drain output. FLG is disabled for 7ms after turn-on.
OUT	6, 7	6, 7	5	Voltage Output Pin (all OUT pins must be tied together externally)
NC	8	8	6	No internal connection; recommend tie to OUT pins.
Exposed Pad	Exposed Pad	Not applicable	Exposed Pad	Exposed pad. It should be externally connected to GND and thermal mass for enhanced thermal impedance. It should not be used as electrical ground conduction path.

© Diodes Incorporated

Functional Block Diagram

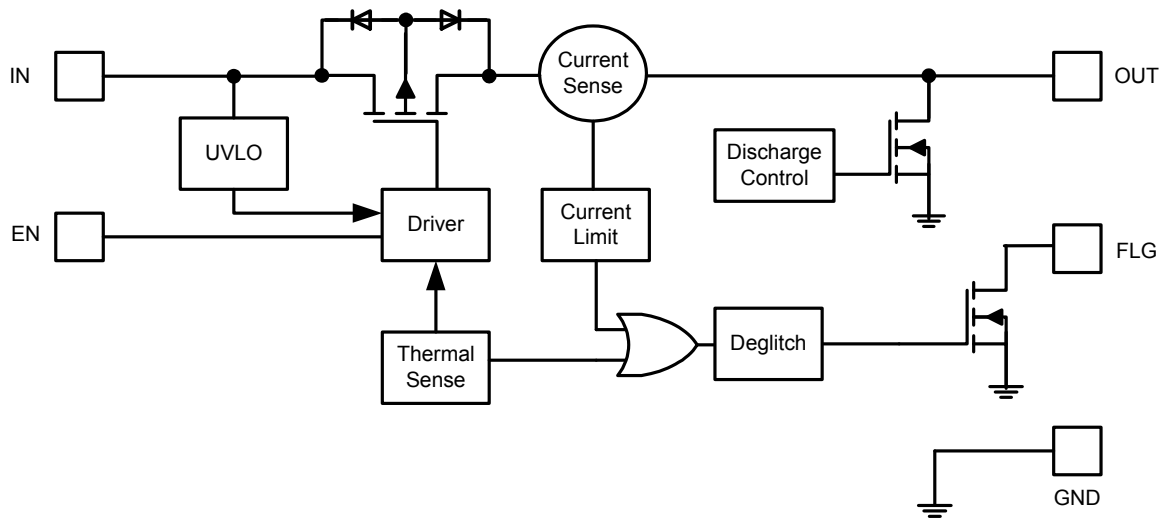

Absolute Maximum Ratings (@T_A = +25°C, unless otherwise specified.)

Symbol	Parameter	Rating	Unit
ESD HBM	Human Body Model ESD Protection	2	kV
ESD MM	Machine Model ESD Protection	200	V
V_{IN}	Input Voltage (Note 4)	-0.3 to +6.5	V
V_{OUT}	Output Voltage (Note 4)	-0.3 to 6.5 or V_{IN} +0.3	V
V_{EN} , V_{FLG}	Enable Voltage (Note 4)	-0.3 to 6.5 or V_{IN} +0.3	V
I_{LOAD}	Maximum Continuous Load Current	Internal Limited	A
T_{JMAX}	Maximum Junction Temperature	150	°C
T_{ST}	Storage Temperature Range (Note 5)	-65 to +150	°C

Notes: 4. All voltages referred to GND pin. Maximums are the lower of V_{IN} + 0.3 and 6.5V
5. UL Recognized Rating from -30°C to +70°C (Diodes qualified T_{ST} from -65°C to +150°C)

Caution: Stresses greater than the 'Absolute Maximum Ratings' specified above, may cause permanent damage to the device. These are stress ratings only; functional operation of the device at these or any other conditions exceeding those indicated in this specification is not implied. Device reliability may be affected by exposure to absolute maximum rating conditions for extended periods of time.

Semiconductor devices are ESD sensitive and may be damaged by exposure to ESD events. Suitable ESD precautions should be taken when handling and transporting these devices

Recommended Operating Conditions (@T_A = +25°C, unless otherwise specified.)

Symbol	Parameter	Min	Max	Unit
V_{IN}	Input voltage	2.7	5.5	V
I_{OUT}	Output Current	0	2.5	A
V_{IH}	High-Level Input Voltage on EN	2.0	V_{IN}	V
V_{IL}	Low-Level Input Voltage on EN	0	0.8	V
T_A	Operating Ambient Temperature (Note 6),	-40	+85	°C

Note: 6. $T_{A(MAX)}$ = +70°C if V_{IN} ≤ 4.1V and I_{OUT} = 2.5A to keep device from going into thermal protection.

© Diodes Incorporated

Electrical Characteristics (@ T_A = +25°C, V_{IN} = +5.0V, C_{IN} = 0.1µF, C_L = 1µF,unless otherwise specified.)

Symbol	Parameter	Conditions (Note 7)		Min	Typ	Max	Unit
V_{UVLO}	Input UVLO	V_{IN} rising		1.6	2.0	2.4	V
ΔV_{UVLO}	Input UVLO Hysteresis	V_{IN} decreasing			50		mV
I_{SHDN}	Input Shutdown Current	Disabled, OUT = open			0.1	1.0	µA
I_Q	Input Quiescent Current	Enabled, OUT = open			60	100	µA
I_{LEAK}	Input Leakage Current	Disabled, OUT grounded			0.1	1.0	µA
I_{REV}	Reverse Leakage Current	Disabled, V_{IN} = 0V, V_{OUT} = 5V, I_{REV} at V_{IN}			0.01	1.00	µA
$R_{DS(ON)}$	Switch on-resistance	V_{IN} = 5V, I_{OUT} = 1A	T_A = 25°C		70	78	mΩ
			-40°C ≤ T_A ≤ 85°C			105	
		V_{IN} = 3.3V, I_{OUT} = 1A	T_A = 25°C		90	108	
			-40°C ≤ T_A ≤ 85°C			135	
I_{LIMIT}	Over-Load Current Limit (Note 7)	V_{IN} = 5V, V_{OUT} = 4.5V	-40°C≤ T_A ≤85°C	2.8	3.7	4.6	A
I_{TRIG}	Current limiting trigger threshold	Output Current Slew rate (<100A/s)			3.7		A
I_{SHORT}	Short-Circuit Current Limit	Enabled into short circuit			3.7		A
T_{SHORT}	Short-Circuit Response Time	V_{OUT} = 0V to I_{OUT} = I_{LIMIT} (OUT shorted to ground)			2		µs
V_{IL}	EN Input Logic Low Voltage	V_{IN} = 2.7V to 5.5V				0.8	V
V_{IH}	EN Input Logic High Voltage	V_{IN} = 2.7V to 5.5V		2			V
$I_{LEAK-EN}$	EN Input leakage	V_{IN} = 5V, V_{EN} = 0V and 5.5V			0.01	1.00	µA
I_{LEAK-O}	Output leakage current	Disabled, V_{OUT} = 0V			0.5	1	µA
$T_{D(ON)}$	Output turn-on delay time	C_L = 1µF, R_{LOAD} = 5Ω			0.1		ms
T_R	Output turn-on rise time	C_L = 1µF, R_{LOAD} = 5Ω			0.6	1.5	ms
$T_{D(OFF)}$	Output turn-off delay time	C_L = 1µF, R_{LOAD} = 5Ω			0.1		ms
T_F	Output turn-off fall time	C_L = 1µF, R_{LOAD} = 5Ω			0.05	0.10	ms
R_{FLG}	FLG output FET on-resistance	I_{FLG} = 10mA			20	40	Ω
I_{FOH}	FLG Off Current	V_{FLG} = 5V			0.01	1.00	µA
T_{BLANK}	FLG Blanking Time	Assertion or deassertion due to overcurrent and over-temperature condition		4	7	15	ms
T_{DIS}	Discharge time	C_L= 1µF, V_{IN} = 5V, disabled to V_{OUT} < 0.5V			0.6		ms
R_{DIS}	Discharge resistance (Note 8)	V_{IN} = 5V, disabled, I_{OUT} = 1mA			100		Ω
T_{SHDN}	Thermal Shutdown Threshold	Enabled			140		°C
T_{HYS}	Thermal Shutdown Hysteresis				20		°C
θ_{JA}	Thermal Resistance Junction-to-Ambient	SO-8 (Note 9)			96		°C/W
		MSOP-8 (Note 9)			130		°C/W
		MSOP-8EP (Note 10)			92		°C/W
		U-DFN3030-8 (Note 10)			84		°C/W
		U-DFN2020-6 (Note 11)			90		°C/W

Notes:
7. Pulse-testing techniques maintain junction temperature close to ambient temperature; thermal effects must be taken into account separately.
8. The discharge function is active when the device is disabled (when enable is de-asserted or during power-up power-down when V_{IN} < V_{UVLO}). The discharge function offers a resistive discharge path for the external storage capacitor for limited time.
9. Device mounted on 2” x 2” FR-4 substrate PCB, 2oz copper, with minimum recommended pad layout.
10. Device mounted on 2” x 2” FR-4 substrate PCB, 2oz copper, with minimum recommended pad on top layer and thermal vias to bottom layer ground plane.
11. Device mounted on 1"x1" FR-4 substrate PCB, 2oz copper, with minimum recommended padon top layer and thermal vias to bottom layer ground

© Diodes Incorporated

Typical Performance Characteristics

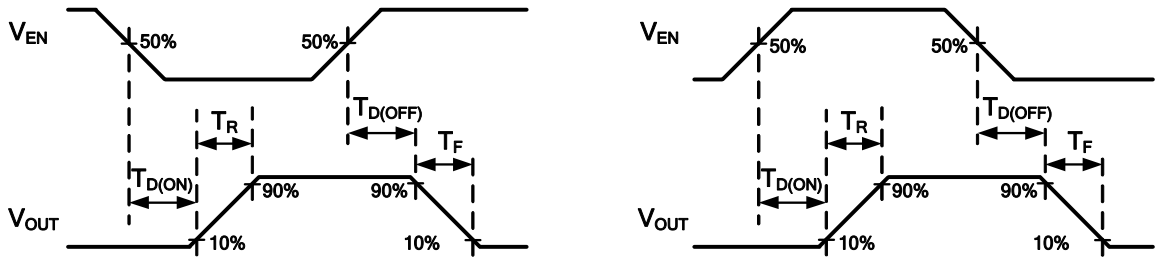

Figure 1 Voltage Waveforms: AP2501 (left), AP2511 (right)

All Enable Plots are for Enable Active Low

Turn-On Delay and Rise Time

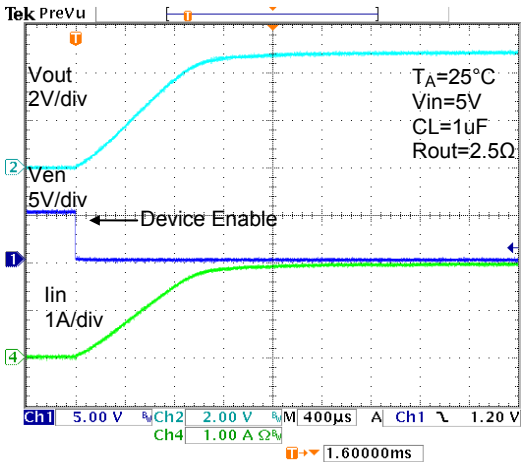

Turn-Off Delay and Fall Time

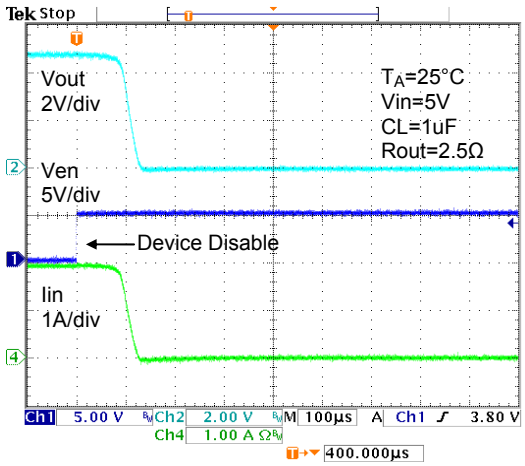

Turn-On Delay and Rise Time

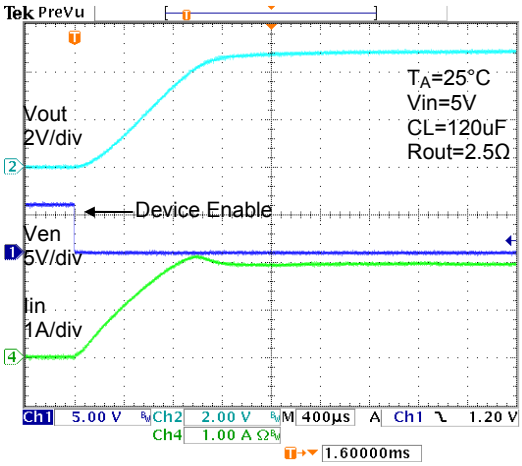

Turn-Off Delay and Fall Time

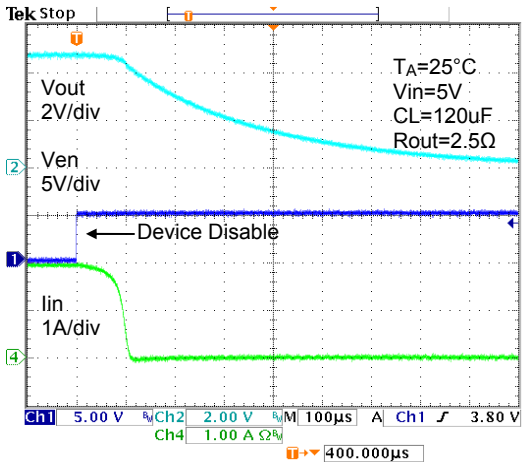

© Diodes Incorporated

Typical Performance Characteristics (cont.)

Device Enabled Into Short-Circuit

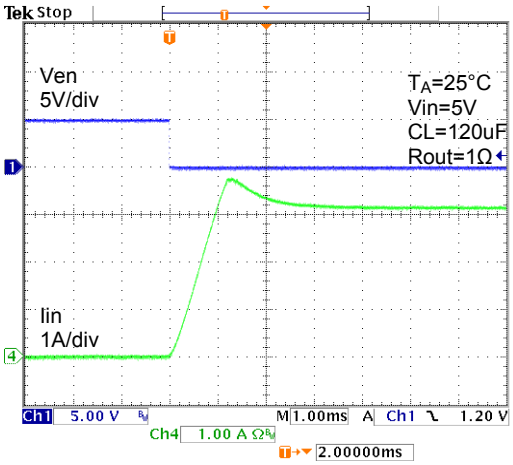

Inrush Current

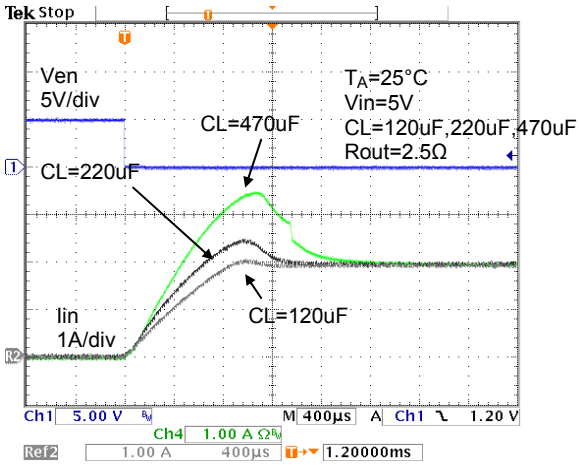

Full-Load to Short-Circuit Transient Response

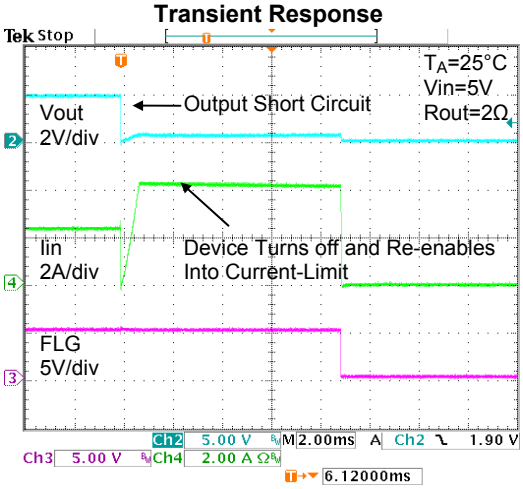

Short-Circuit to Full-Load Recovery Response

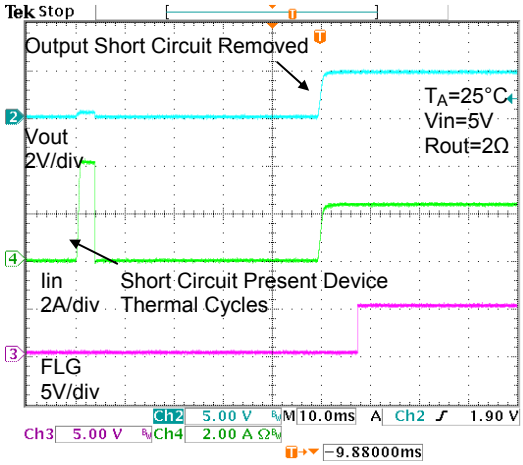

No-Load to Short-Circuit Transient Response

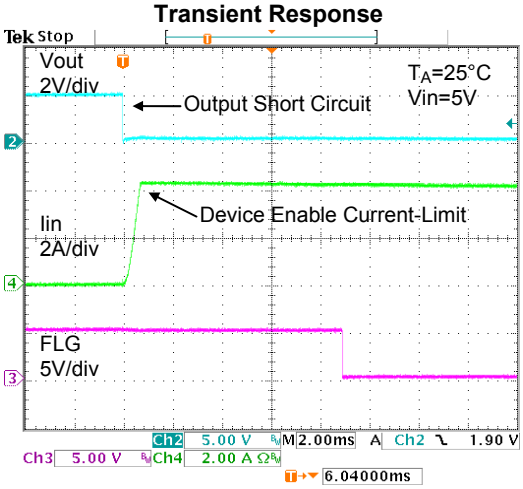

Short-Circuit to No-Load Recovery Response

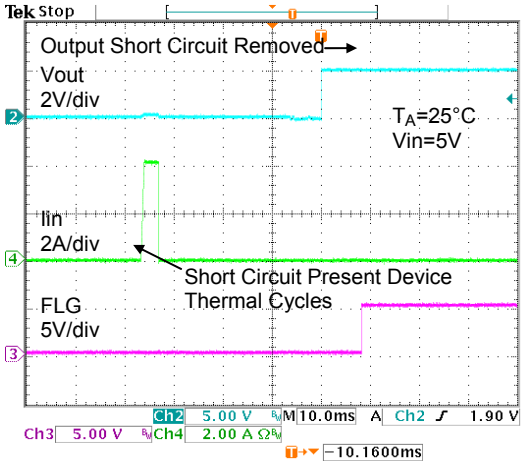

© Diodes Incorporated

Typical Performance Characteristics (cont.)

Power ON

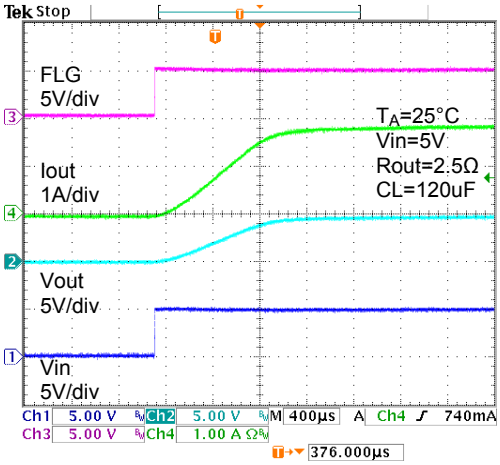

Short-Circuit with Blanking Time and Recovery

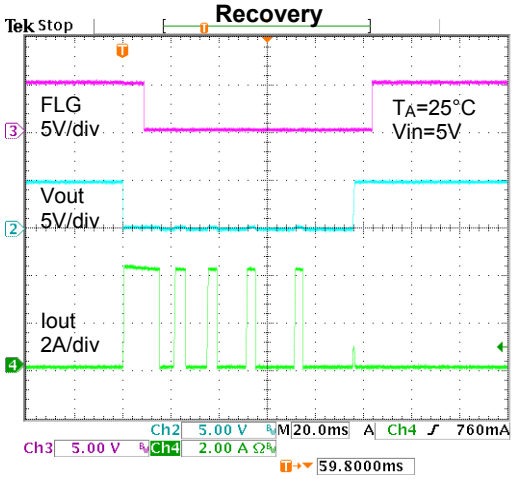

UVLO Increasing

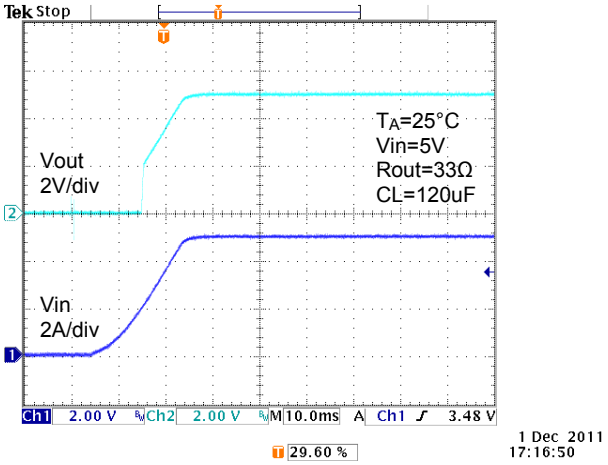

UVLO Decreasing

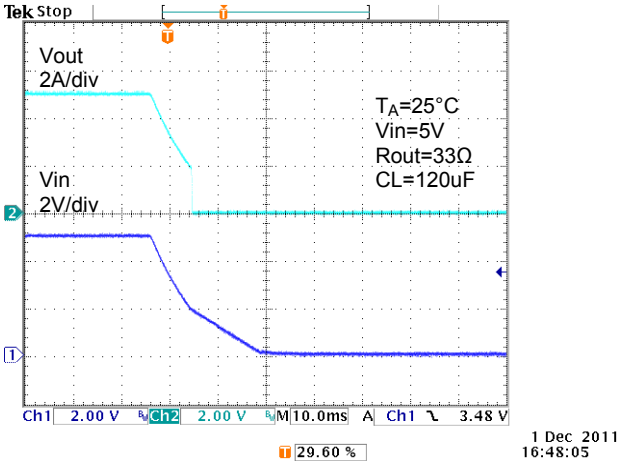

© Diodes Incorporated

Typical Performance Characteristics (cont.)

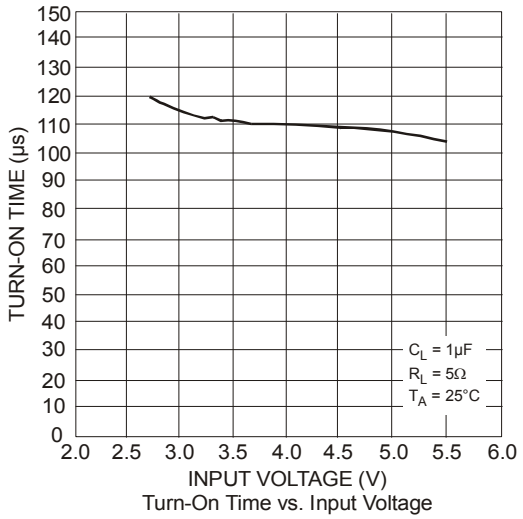

Turn-On Time vs. Input Voltage

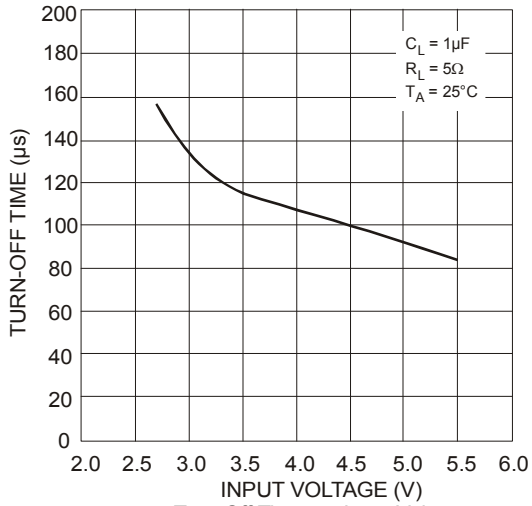

Turn-Off Time vs. Input Voltage

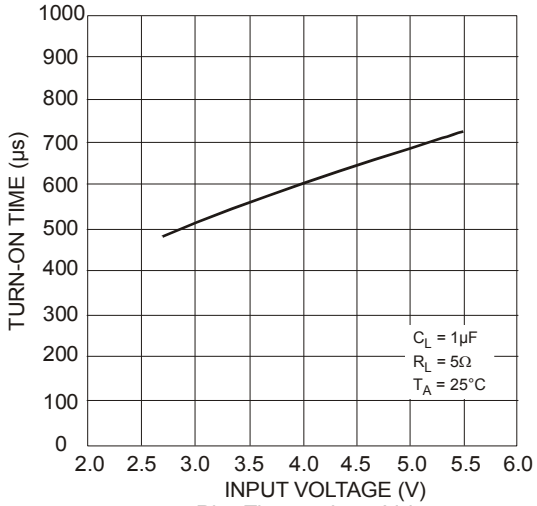

Rise Time vs. Input Voltage

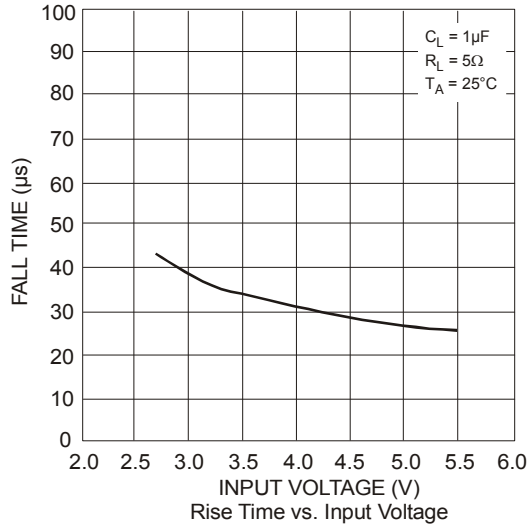

Rise Time vs. Input Voltage

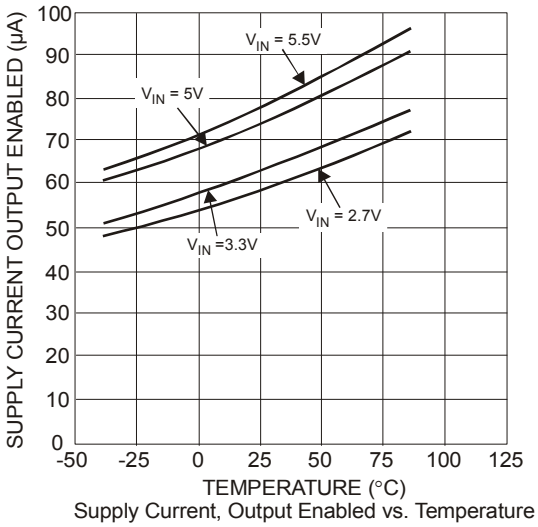

Supply Current, Output Enabled vs. Temperature

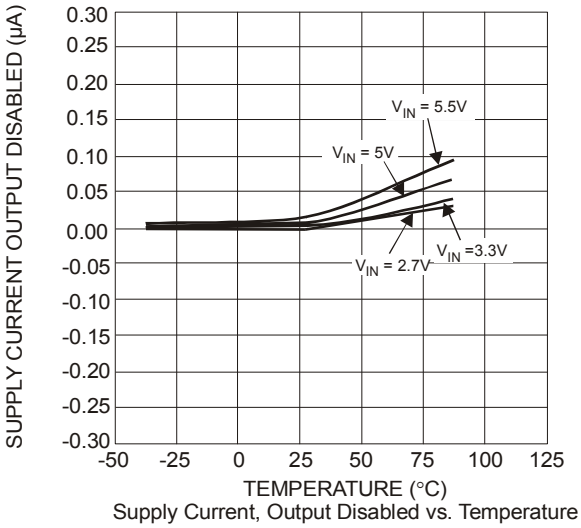

Supply Current, Output Disabled vs. Temperature

© Diodes Incorporated

Typical Performance Characteristics (cont.)

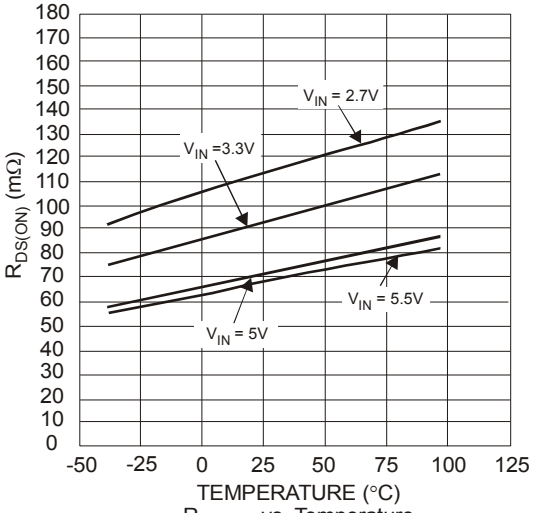

$R_{DS(ON)}$ vs. Temperature

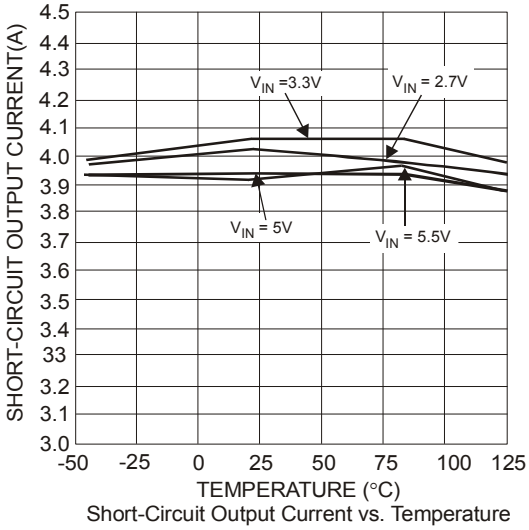

Short-Circuit Output Current vs. Temperature

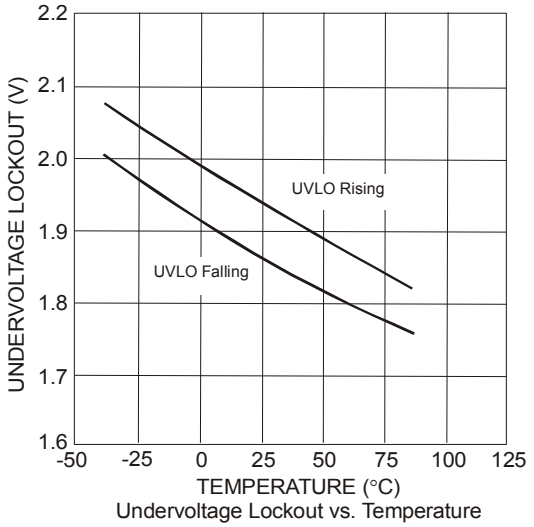

Undervoltage Lockout vs. Temperature

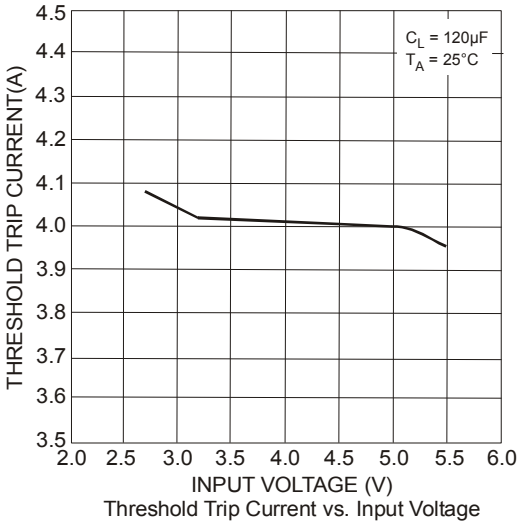

Threshold Trip Current vs. Input Voltage

© Diodes Incorporated

Application Note

Power Supply Considerations

A 0.1μF to 2.2μF X7R or X5R ceramic bypass capacitor placed between IN and GND, close to the device, is recommended. When an external power supply is used, or an additional ferrite bead is added to the input, high inrush current may cause voltage spikes higher than the device maximum input rating during short circuit condition. In this case a 2.2μF or bigger capacitor is recommended. Placing a high-value electrolytic capacitor on the input and output pin(s) is recommended when the output load is heavy. This precaution reduces power-supply transients that may cause ringing on the input. Additionally, bypassing the output with a 0.1μF to 1.0μF ceramic capacitor improves the immunity of the device to short circuit transients.

Over-Current and Short Circuit Protection

An internal sensing FET is employed to check for over-current conditions. Unlike current-sense resistors, sense FETs do not increase the series resistance of the current path. When an over-current condition is detected, the device maintains a constant output current and reduces the output voltage accordingly. Complete shutdown occurs only if the fault stays long enough to activate thermal limiting.

Three possible overload conditions can occur. In the first condition, the output has been shorted to GND before the device is enabled or before VIN has been applied. The AP2501/AP2511 senses the short circuit and immediately clamps output current to a certain safe level namely I_{LIMIT}.

In the second condition, an output short or an overload occurs while the device is enabled. At the instance the overload occurs, higher inrush current may flow for a very short period of time before the current limit function can react. The input capacitor(s) rapidly discharge through the device, activating current limit circuitry. Protection is achieved by momentarily opening the P-MOS high-side power switch and then gradually turning it on. After the current limit function has tripped (reached the over-current trip threshold), the device switches into current limiting mode and the current is clamped at I_{LIMIT}.

In the third condition, the load has been gradually increased beyond the recommended operating current. The current is permitted to rise until the current-limit threshold (I_{TRIG}) is reached or until the thermal limit of the device is exceeded. The AP2501/AP2511 is capable of delivering current up to the current-limit threshold without damaging the device. Once the threshold has been reached, the device switches into its current limiting mode and is set at I_{LIMIT}.

FLG Response

When an over-current or over-temperature shutdown condition is encountered, the FLG open-drain output goes active low after a nominal 7-ms deglitch timeout. The FLG output remains low until both over-current and over-temperature conditions are removed.

Connecting a heavy capacitive load to the output of the device can cause a momentary over-current condition, which does not trigger the FLG due to the 7-ms deglitch timeout. The AP2501/AP2511 is designed to eliminate false over-current reporting without the need of external components to remove unwanted pulses.

Power Dissipation and Junction Temperature

The low on-resistance of the internal MOSFET allows the small surface-mount packages to pass large current. Using the maximum operating ambient temperature (T_A) and $R_{DS(ON)}$, the power dissipation can be calculated by:

$$P_D = R_{DS(ON)} \times I^2$$

Finally, calculate the junction temperature:

$$T_J = P_D \times R_{\theta JA} + T_A$$

Where:

T_A = Ambient temperature °C
$R_{\theta JA}$ = Thermal resistance
P_D = Total power dissipation

Thermal Protection

Thermal protection prevents the IC from damage when heavy-overload or short-circuit faults are present for extended periods of time. The AP2501/AP2511 implements a thermal sensing to monitor the operating junction temperature of the power distribution switch. Once the die temperature rises to approximately 140°C due to excessive power dissipation in an over-current or short-circuit condition the internal thermal sense circuitry turns the power switch off, thus preventing the power switch from damage. Hysteresis is built into the thermal sense circuit allowing the device to cool down approximately 20°C before the switch turns back on. The switch continues to cycle in this manner until the load fault or input power is removed. The FLG open-drain output is asserted when an over-temperature shutdown or over-current occurs with 7-ms deglitch.

© Diodes Incorporated

Application Note (cont.)

Under-voltage Lockout (UVLO)

Under-voltage lockout function (UVLO) keeps the internal power switch from being turned on until the power supply has reached at least 2V, even if the switch is enabled. Whenever the input voltage falls below approximately 2V, the power switch is quickly turned off. This facilitates the design of hot-insertion systems where it is not possible to turn off the power switch before input power is removed.

Discharge Function

The discharge function of the device is active when enable is disabled or de-asserted. The discharge function with the N-MOS power switch implementation is activated and offers a resistive discharge path for the external storage capacitor. This is designed for discharging any residue of the output voltage when either no external output resistance or load resistance is present at the output.

Ordering Information

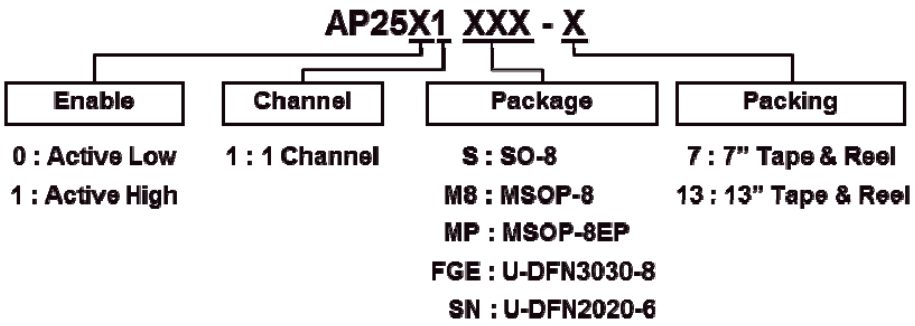

Part Number	Package Code	Packaging	7"/13" Tape and Reel	
			Quantity	Part Number Suffix
AP25X1S-13	S	SO-8	2500/Tape & Reel	-13
AP25X1M8-13	M8	MSOP-8	2500/Tape & Reel	-13
AP25X1MP-13	MP	MSOP-8EP	2500/Tape & Reel	-13
AP25X1FGE-7	FGE	U-DFN3030-8	3000/Tape & Reel	-7
AP25X1SN-7	SN	U-DFN2020-6	3000/Tape & Reel	-7

Marking Information

(1) SO-8

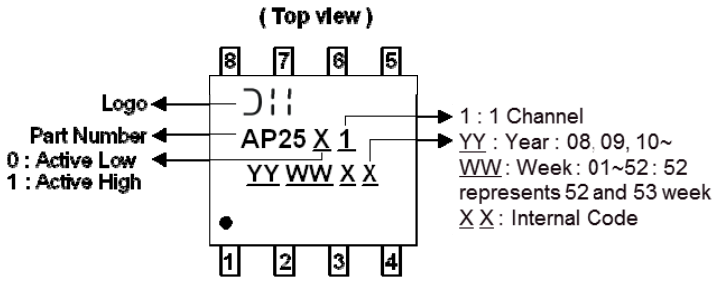

© Diodes Incorporated

Marking Information (cont.)

(2) MSOP-8

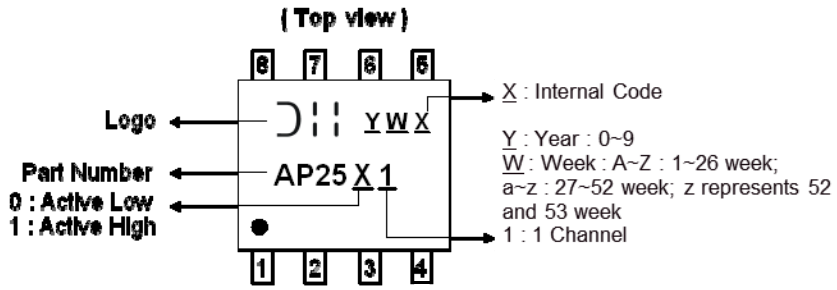

(3) MSOP-8EP

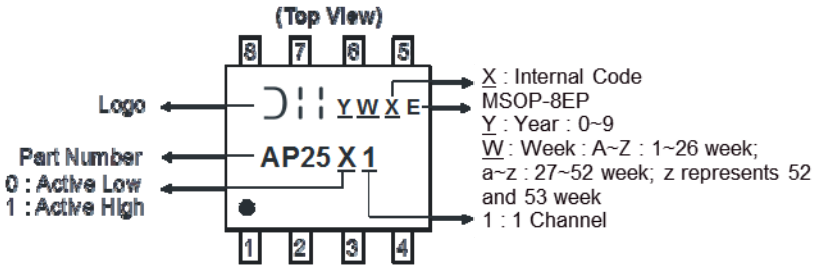

(4) U-DFN3030-8

(Top View)

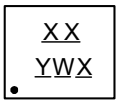

XX : Identification Code
Y : Year : 0~9
W : Week : A~Z : 1~26 week;
a~z : 27~52 week; z represents 52 and 53 week
X : A~Z : Internal Code

Part Number	Package	Identification Code
AP2501FGE-7	U-DFN3030-8	BP
AP2511FGE-7	U-DFN3030-8	BR

(5) U-DFN2020-6

(Top View)

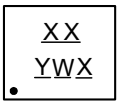

XX : Identification Code
Y : Year : 0~9
W : Week : A~Z : 1~26 week;
a~z : 27~52 week; z represents 52 and 53 week
X : A~Z : Internal Code

Part Number	Package	Identification Code
AP2501SN-7	U-DFN2020-6	DP
AP2511SN-7	U-DFN2020-6	DR

© Diodes Incorporated

Package Outline Dimensions (All dimensions in mm.)

Please see AP02002 at http://www.diodes.com/datasheets/ap02002.pdf for latest version.

1. Package type: SO-8

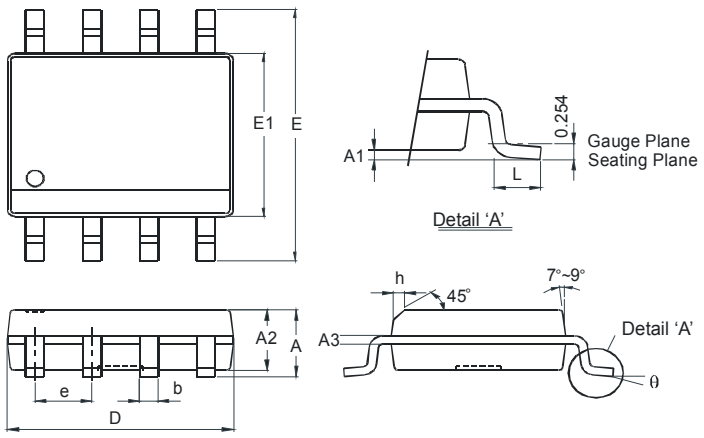

SO-8		
Dim	**Min**	**Max**
A	-	1.75
A1	0.10	0.20
A2	1.30	1.50
A3	0.15	0.25
b	0.3	0.5
D	4.85	4.95
E	5.90	6.10
E1	3.85	3.95
e	1.27 Typ	
h	-	0.35
L	0.62	0.82
θ	0°	8°
All Dimensions in mm		

2. Package type: MSOP-8

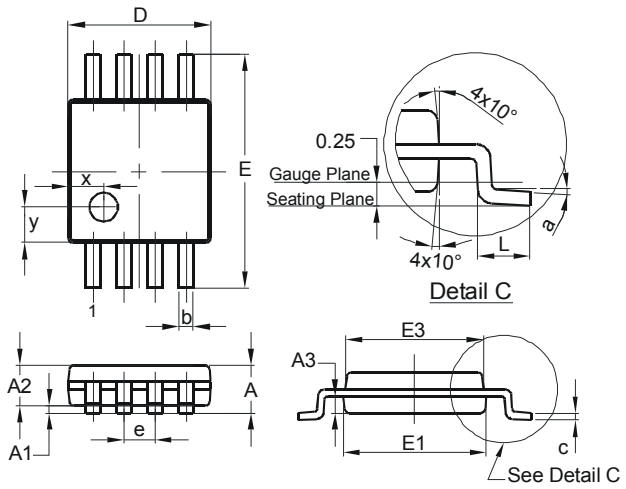

MSOP-8			
Dim	**Min**	**Max**	**Typ**
A	-	1.10	-
A1	0.05	0.15	0.10
A2	0.75	0.95	0.86
A3	0.29	0.49	0.39
b	0.22	0.38	0.30
c	0.08	0.23	0.15
D	2.90	3.10	3.00
E	4.70	5.10	4.90
E1	2.90	3.10	3.00
E3	2.85	3.05	2.95
e	-	-	0.65
L	0.40	0.80	0.60
a	0°	8°	4°
x	-	-	0.750
y	-	-	0.750
All Dimensions in mm			

© Diodes Incorporated

Package Outline Dimensions (cont.) (All dimensions in mm.)

Please see AP02002 at http://www.diodes.com/datasheets/ap02002.pdf for latest version.

3. Package type: MSOP-8EP

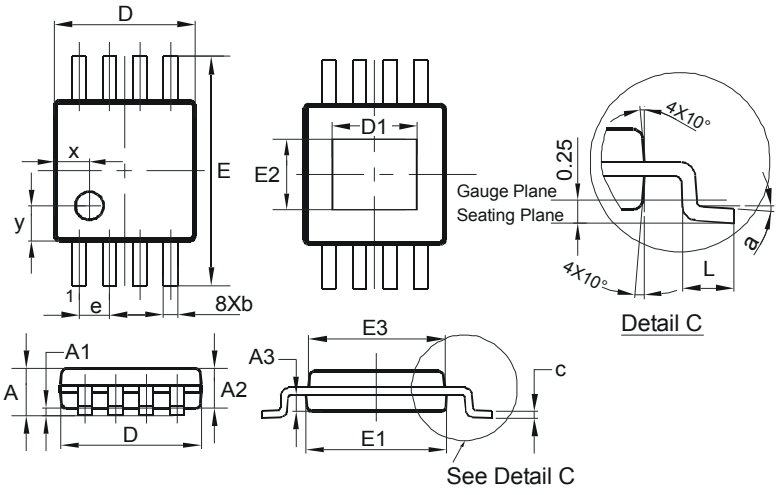

MSOP-8EP			
Dim	**Min**	**Max**	**Typ**
A	-	1.10	-
A1	0.05	0.15	0.10
A2	0.75	0.95	0.86
A3	0.29	0.49	0.39
b	0.22	0.38	0.30
c	0.08	0.23	0.15
D	2.90	3.10	3.00
D1	1.60	2.00	1.80
E	4.70	5.10	4.90
E1	2.90	3.10	3.00
E2	1.30	1.70	1.50
E3	2.85	3.05	2.95
e	-	-	0.65
L	0.40	0.80	0.60
a	0°	8°	4°
x	-	-	0.750
y	-	-	0.750
All Dimensions in mm			

4. Package type: U-DFN3030-8 Type E

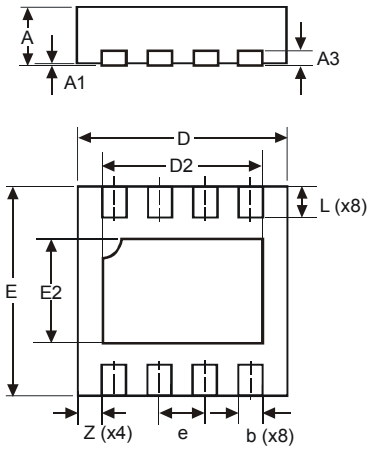

U-DFN3030-8 Type E			
Dim	**Min**	**Max**	**Typ**
A	0.57	0.63	0.60
A1	0	0.05	0.02
A3	–	–	0.15
b	0.20	0.30	0.25
D	2.95	3.05	3.00
D2	2.15	2.35	2.25
E	2.95	3.05	3.00
e	–	–	0.65
E2	1.40	1.60	1.50
L	0.30	0.60	0.45
Z	–	–	0.40
All Dimensions in mm			

5. Package type: U-DFN2020-6

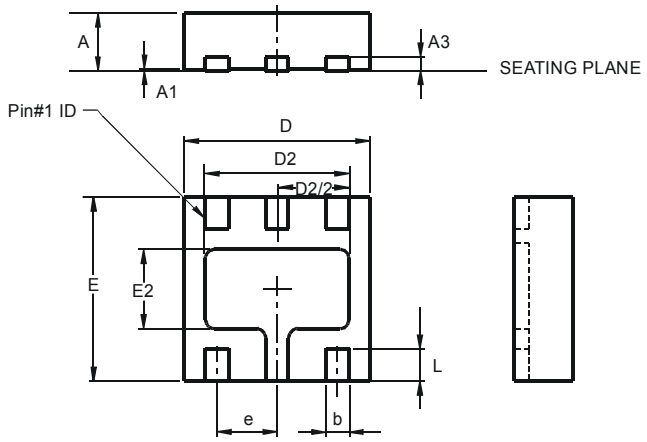

U-DFN2020-6			
Dim	**Min**	**Max**	**Typ**
A	0.57	0.63	0.60
A1	0	0.05	0.03
A3	—	—	0.15
b	0.20	0.30	0.25
D	1.95	2.075	2.00
D2	1.45	1.65	1.55
e	—	—	0.65
E	1.95	2.075	2.00
E2	0.76	0.96	0.86
L	0.30	0.40	0.35
All Dimensions in mm			

© Diodes Incorporated

Suggested Pad Layout

Please see AP02001 at http://www.diodes.com/datasheets/ap02001.pdf for the latest version.

(1) Package type: SO-8

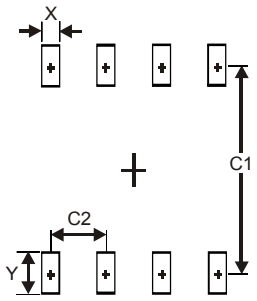

Dimensions	Value (in mm)
X	0.60
Y	1.55
C1	5.4
C2	1.27

(2) Package type: MSOP-8

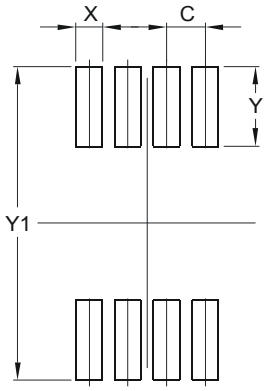

Dimensions	Value (in mm)
C	0.650
X	0.450
Y	1.350
Y1	5.300

(3) Package type: MSOP-8EP

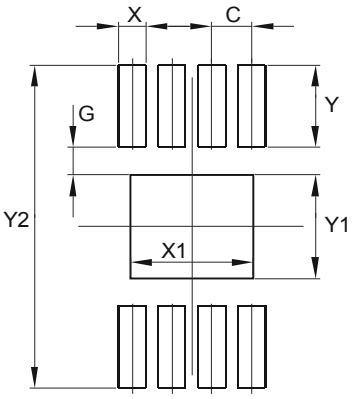

Dimensions	Value (in mm)
C	0.650
G	0.450
X	0.450
X1	2.000
Y	1.350
Y1	1.700
Y2	5.300

© Diodes Incorporated

Suggested Pad Layout (cont.)

Please see AP02001 at http://www.diodes.com/datasheets/ap02001.pdf for the latest version.

(4) Package type: U-DFN3030-8 Type E

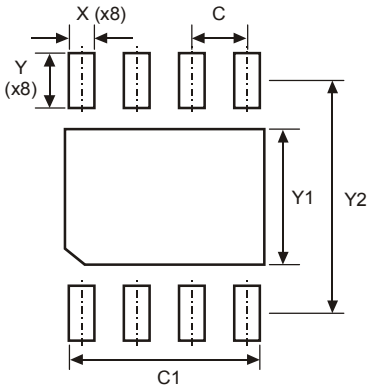

Dimensions	Value (in mm)
C	0.65
C1	2.35
X	0.30
Y	0.65
Y1	1.60
Y2	2.75

(5) Package type: U-DFN2020-6

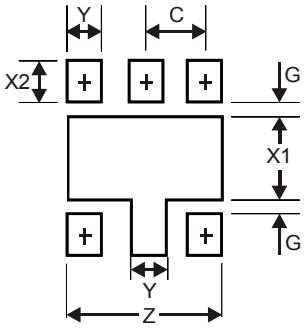

Dimensions	Value (in mm)
Z	1.67
G	0.15
X1	0.90
X2	0.45
Y	0.37
C	0.65

© Diodes Incorporated

Taping Orientation (Note 12)

For U-DFN2020-6 and U-DFN3030-8 Type E

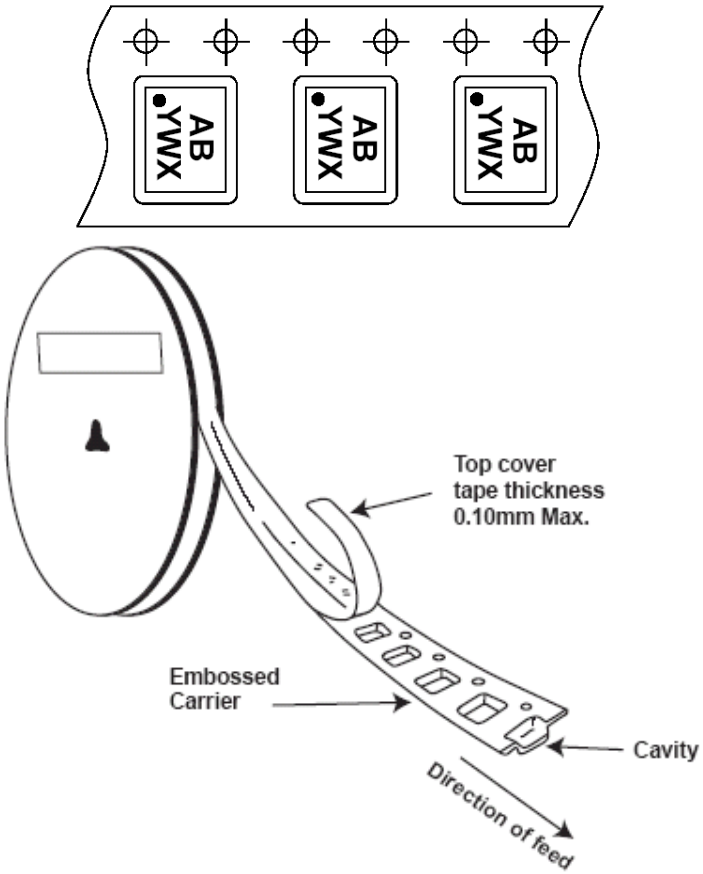

Note: 12. The taping orientation of the other package type can be found on our website at http://www.diodes.com/datasheets/ap02007.pdf

© Diodes Incorporated

IMPORTANT NOTICE

DIODES INCORPORATED MAKES NO WARRANTY OF ANY KIND, EXPRESS OR IMPLIED, WITH REGARDS TO THIS DOCUMENT, INCLUDING, BUT NOT LIMITED TO, THE IMPLIED WARRANTIES OF MERCHANTABILITY AND FITNESS FOR A PARTICULAR PURPOSE (AND THEIR EQUIVALENTS UNDER THE LAWS OF ANY JURISDICTION).

Diodes Incorporated and its subsidiaries reserve the right to make modifications, enhancements, improvements, corrections or other changes without further notice to this document and any product described herein. Diodes Incorporated does not assume any liability arising out of the application or use of this document or any product described herein; neither does Diodes Incorporated convey any license under its patent or trademark rights, nor the rights of others. Any Customer or user of this document or products described herein in such applications shall assume all risks of such use and will agree to hold Diodes Incorporated and all the companies whose products are represented on Diodes Incorporated website, harmless against all damages.

Diodes Incorporated does not warrant or accept any liability whatsoever in respect of any products purchased through unauthorized sales channel. Should Customers purchase or use Diodes Incorporated products for any unintended or unauthorized application, Customers shall indemnify and hold Diodes Incorporated and its representatives harmless against all claims, damages, expenses, and attorney fees arising out of, directly or indirectly, any claim of personal injury or death associated with such unintended or unauthorized application.

Products described herein may be covered by one or more United States, international or foreign patents pending. Product names and markings noted herein may also be covered by one or more United States, international or foreign trademarks.

This document is written in English but may be translated into multiple languages for reference. Only the English version of this document is the final and determinative format released by Diodes Incorporated.

LIFE SUPPORT

Diodes Incorporated products are specifically not authorized for use as critical components in life support devices or systems without the express written approval of the Chief Executive Officer of Diodes Incorporated. As used herein:

A. Life support devices or systems are devices or systems which:

1. are intended to implant into the body, or
2. support or sustain life and whose failure to perform when properly used in accordance with instructions for use provided in the labeling can be reasonably expected to result in significant injury to the user.

B. A critical component is any component in a life support device or system whose failure to perform can be reasonably expected to cause the failure of the life support device or to affect its safety or effectiveness.

Customers represent that they have all necessary expertise in the safety and regulatory ramifications of their life support devices or systems, and acknowledge and agree that they are solely responsible for all legal, regulatory and safety-related requirements concerning their products and any use of Diodes Incorporated products in such safety-critical, life support devices or systems, notwithstanding any devices- or systems-related information or support that may be provided by Diodes Incorporated. Further, Customers must fully indemnify Diodes Incorporated and its representatives against any damages arising out of the use of Diodes Incorporated products in such safety-critical, life support devices or systems.

Copyright © 2013, Diodes Incorporated

www.diodes.com