Futaba

Product leaflet

Command-type TFT-LCD Module
3.5 inch standard product

RoHS

■ Features

This TFT-LCD module/control board displays content, including stored JPEG images and text with internal fonts, by way of a simple command set.

■ Specifications

Item ＼ Series		LC011BA	LC011BD	LC011BB	LC011BE
LCD panel	Display size class[inch]	3.5			
	Pixels [dot]	320 × 240 (QVGA)			
	Active area [W×H mm]	70.08 x 52.56			
	Luminance [c/m^2]	400		320	
	Viewing angles [deg]	Bottom = 70, Top = 50, Left = 70, Right = 70			
	Backlight type	LED			
	LED lifetime [h] ※1	min. 20,000			
Interface		USB 2.0 Full Speed	RS232C (115.2kbps max.)	USB 2.0 Full Speed	RS232C (115.2kbps max.)
Touch panel	Type	–		resistive	
	Active area [W×H mm]	–		76.5 × 62.9	
	Surface durability [touches]	–		1,000,000	
	Surface hardness	–		3H	
Character		Japanese (kanji, katakana, hiragana, alphanumeric)			
Font code		FA UD Gothic-R			
Internal memory for screen images	Full screen JPEGs	50 (256 kB / 1 JPEG)			
	Partial screen JPEGs	200 (64 kB / 1 JPEG)			
Supply voltage [V]		5.0			
Power consumption [W]		2.0			
Operating temperature [℃]		-10 ～ +60			
Storage temperature [℃]		-30 ～ +70			
Operating temperature [%RH]	no condensation	10 ～ 90			
Storage temperature [%RH]	no condensation	10 ～ 90			
Outer dimensions [W×H×T mm]		92 × 67 × 14.5		92 × 67 × 15.7	
Weight [g]		approx. 60			

※1: LED lifetime = hours for the module luminance to decrease to 50% of original measured brightness at Ta = 25℃.

■ Appearance, outer dimensions

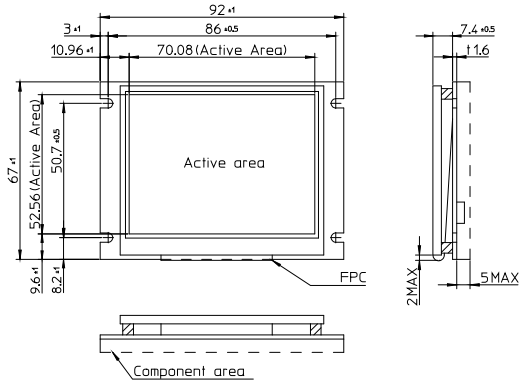

LC011BA, BD (w/o touch panel)

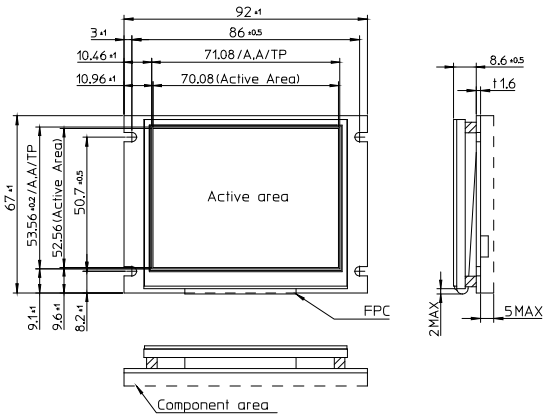

LC011BB, BE (with touch panel)

<Contact>
Futaba Corporation Makuhari Marketing & Sales Center Makuhari Techno-Garden B6, 1-3 Nakase, Mihama-ku, Chiba, 261-8555, Japan
TEL : 81-43-296-5112 FAX : 81-43-296-5122
URL http://www.futaba.co.jp/

September 2017