STB20NM60-1 - STP20NM60FP
STB20NM60 - STP20NM60 - STW20NM60

N-channel 600V - 0.25Ω - 20A - TO-247 - TO-220/FP - D^2/I^2PAK
MDmesh™ Power MOSFET

Features

Type	V_{DSS}	$R_{DS(on)}$	I_D
STP20NM60	600V	< 0.29Ω	20A
STP20NM60FP	600V	< 0.29Ω	20A
STB20NM60	600V	< 0.29Ω	20A
STB20NM60-1	600V	< 0.29Ω	20A
STW20NM60	600V	< 0.29Ω	20A

- High dv/dt and avalanche capabilities
- 100% avalanche tested
- Low input capacitance and gate charge
- Low gate input resistance

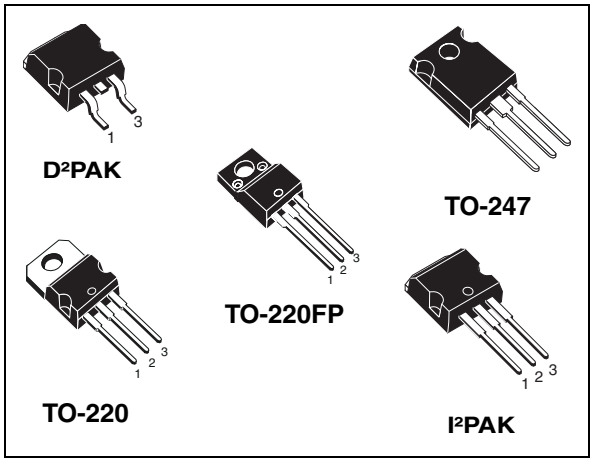

Applications

- Switching applications

Description

The MDmesh™ is a new revolutionary Power MOSFET technology that associates the multiple drain process with the company's PowerMESH™ horizontal layout. The resulting product has an outstanding low on-resistance, impressively high dv/dt and excellent avalanche characteristics. The adoption of the company's proprietary strip technique yields overall dynamic performance that is significantly better than that of similar competition's products.

Figure 1. Internal schematic diagram

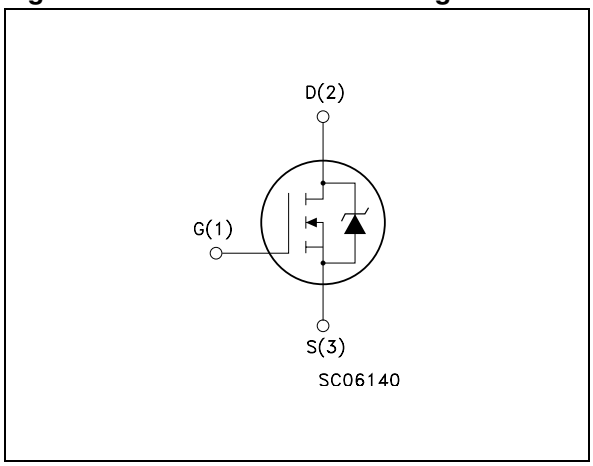

Table 1. Device summary

Part number	Marking	Package	Packaging
STP20NM60	P20NM60	TO-220	Tube
STP20NM60FP	P20NM60FP	TO-220FP	Tube
STB20NM60T4	B20NM60	D²PAK	Tape & reel
STB20NM60-1	B20NM60-1	I²PAK	Tube
STW20NM60	W20NM60	TO-247	Tube

Contents

1 Electrical ratings 3

2 Electrical characteristics 4

2.1 Electrical characteristics (curves) 6

3 Test circuit 9

4 Package mechanical data 10

5 Packaging mechanical data 16

6 Revision history 17

1 Electrical ratings

Table 2. Absolute maximum ratings

Symbol	Parameter	Value		Unit
		TO-220/D²PAK I²PAK/TO-247	TO-220FP	
V_{DS}	Drain-source voltage (V_{GS} = 0)	600		V
V_{GS}	Gate- source voltage	±30		V
I_D	Drain current (continuous) at T_C = 25°C	20	20 (1)	A
I_D	Drain current (continuous) at T_C = 100°C	12.6	12.6 (1)	A
I_{DM} (2)	Drain current (pulsed)	80	80 (1)	A
P_{TOT}	Total dissipation at T_C = 25°C	192	45	W
	Derating factor	1.5	0.36	W/°C
dv/dt (3)	Peak diode recovery voltage slope	15		V/ns
V_{ISO}	Insulation withstand voltage (RMS) from all three leads to external heat sink (t=1s;T_C=25°C)	--	2500	V
T_{stg}	Storage temperature	-65 to 150		°C
T_j	Max. operating junction temperature	150		°C

1. Limited only by maximum temperature allowed
2. Pulse width limited by safe operating area
3. $I_{SD} \leq 20A$, di/dt $\leq 400A/\mu s$, $V_{DD} \leq V_{(BR)/DSS}$, $Tj \leq T_{JMAX}$

Table 3. Thermal resistance

Symbol	Parameter	TO-220/D²PAK I²PAK/TO-247	TO-220FP	Unit
Rthj-case	Thermal resistance junction-case max	0.65	2.8	°C/W
Rthj-amb	Thermal resistance junction-ambient max	62.5		°C/W
T_l	Maximum lead temperature for soldering purpose	300		°C

Table 4. Avalanche data

Symbol	Parameter	Max. value	Unit
I_{AS}	Avalanche current, repetitive or not-repetitive (pulse width limited by T_j max)	10	A
E_{AS}	Single pulse avalanche energy (starting T_j = 25 °C, I_D = I_{AS}, V_{DD} = 50 V)	650	mJ

2 Electrical characteristics

(T_{CASE}=25°C unless otherwise specified)

Table 5. On/off states

Symbol	Parameter	Test conditions	Min.	Typ.	Max.	Unit
$V_{(BR)DSS}$	Drain-source breakdown voltage	I_D = 250 µA, V_{GS} = 0	600			V
I_{DSS}	Zero gate voltage drain current (V_{GS} = 0)	V_{DS} = Max rating V_{DS}= Max rating, @125°C			1 10	µA µA
I_{GSS}	Gate-body leakage current (V_{DS} = 0)	V_{GS} = ± 30V			±100	nA
$V_{GS(th)}$	Gate threshold voltage	V_{DS} = V_{GS}, I_D = 250 µA	3	4	5	V
$R_{DS(on)}$	Static drain-source on resistance	V_{GS} = 10V, I_D = 10 A		0.25	0.29	Ω

Table 6. Dynamic

Symbol	Parameter	Test conditions	Min.	Typ.	Max.	Unit
g_{fs} (1)	Forward transconductance	V_{DS} > $I_{D(on)}$ x $R_{DS(on)max}$, I_D = 10 A		11		S
C_{iss} C_{oss} C_{rss}	Input capacitance Output capacitance Reverse transfer capacitance	V_{DS} = 25V, f = 1 MHz, V_{GS} = 0		1500 350 35		pF pF pF
$C_{oss\ eq.}$ (2)	Equivalent output capacitance	V_{GS} = 0V, V_{DS} = 0V to 480 V		215		pF
Q_g Q_{gs} Q_{gd}	Total gate charge Gate-source charge Gate-drain charge	V_{DD} = 480 V, I_D = 20 A, V_{GS} = 10V *(see Figure 16)*		39 10 20	54	nC nC nC
R_g	Gate input resistance	f = 1 MHz Gate DC bias=0 Test signal level = 20 mV open drain		1.6		Ω

1. Pulsed: Pulse duration = 300 µs, duty cycle 1.5 %
2. $C_{oss\ eq.}$ is defined as a constant equivalent capacitance giving the same charging time as C_{oss} when V_{DS} increases from 0 to 80% V_{DSS}.

Table 7. Switching times

Symbol	Parameter	Test conditions	Min.	Typ.	Max.	Unit
$t_{d(on)}$ t_r $t_{d(off)}$ t_f	Turn-on delay time Rise time Turn-off delay time Fall time	V_{DD} = 300 V, I_D = 10 A R_G = 4.7Ω V_{GS} = 10 V *(see Figure 15)*		25 20 42 11		ns ns ns ns

Table 8. Source drain diode

Symbol	Parameter	Test conditions	Min	Typ.	Max	Unit
I_{SD} I_{SDM} (1)	Source-drain current Source-drain current (pulsed)				20 80	A A
V_{SD} (2)	Forward on voltage	I_{SD} = 20 A, V_{GS} = 0			1.5	V
t_{rr} Q_{rr} I_{RRM}	Reverse recovery time Reverse recovery charge Reverse recovery current	I_{SD} =20A, di/dt=100A/µs, V_{DD} = 60 V *(see Figure 20)*		390 5 25		ns µC A
t_{rr} Q_{rr} I_{RRM}	Reverse recovery time Reverse recovery charge Reverse recovery current	I_{SD} =20A, di/dt=100A/µs, T_j = 150°C, V_{DD} = 60 V *(see Figure 20)*		510 6.5 26		ns µC A

1. Pulse width limited by safe operating area
2. Pulsed: Pulse duration = 300 µs, duty cycle 1.5 %

2.1 Electrical characteristics (curves)

Figure 2. Safe operating area for TO-220 / D²PAK / I²PAK

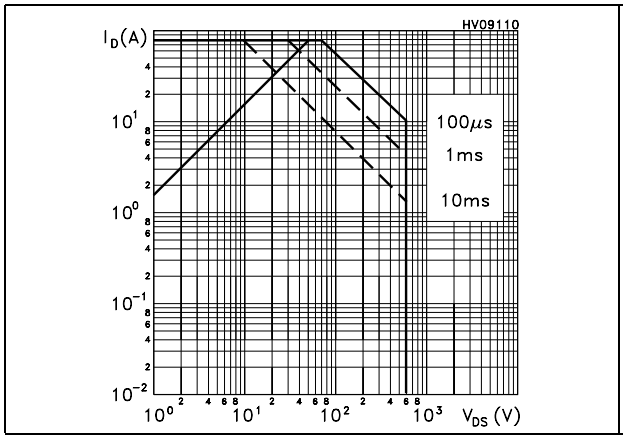

Figure 3. Thermal impedance for TO-220 / D²PAK / I²PAK

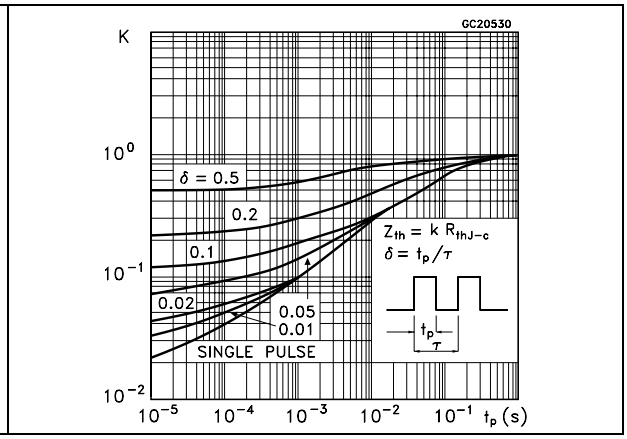

Figure 4. Safe operating area for TO-220FP

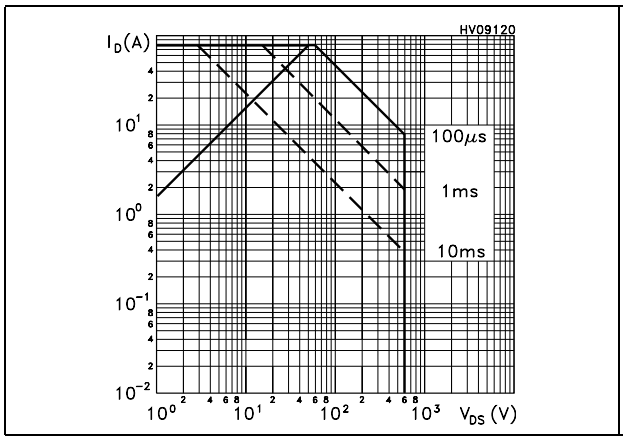

Figure 5. Thermal impedance for TO-220FP

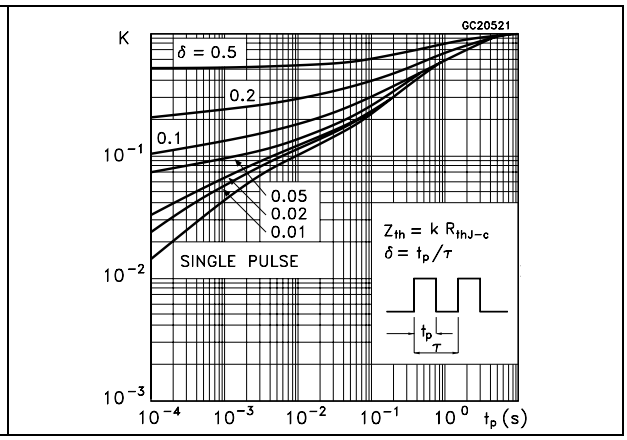

Figure 6. Output characterisics

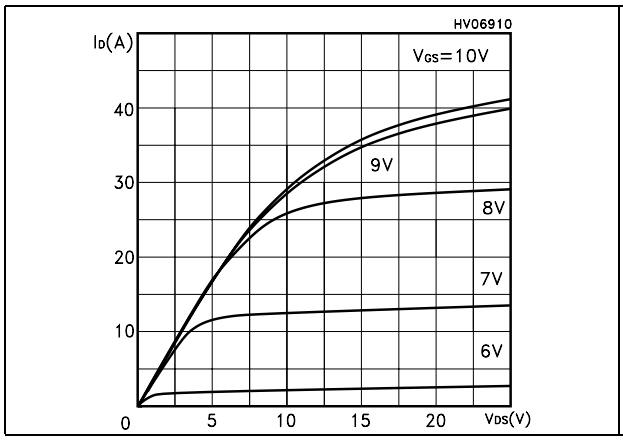

Figure 7. Transfer characteristics

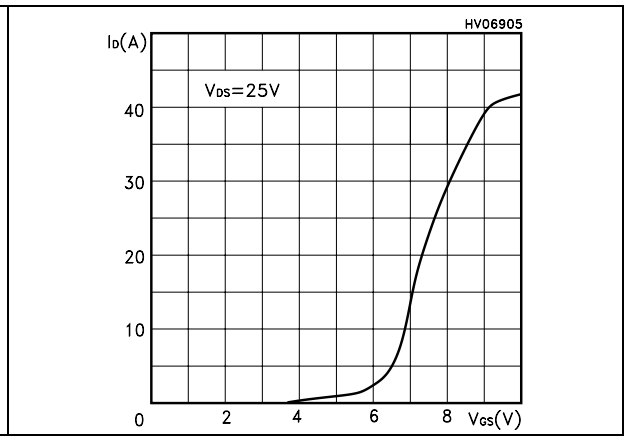

Figure 8. Transconductance

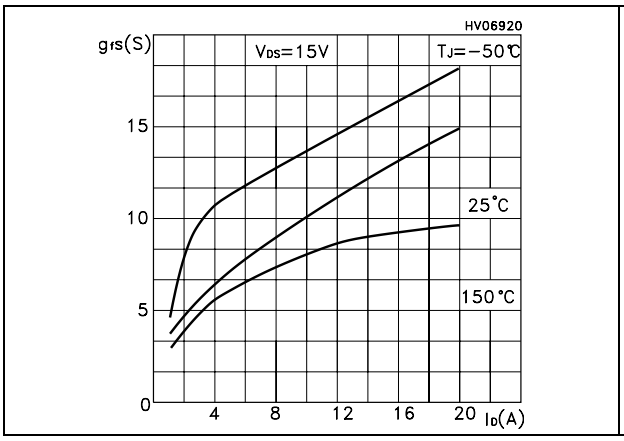

Figure 9. Static drain-source on resistance

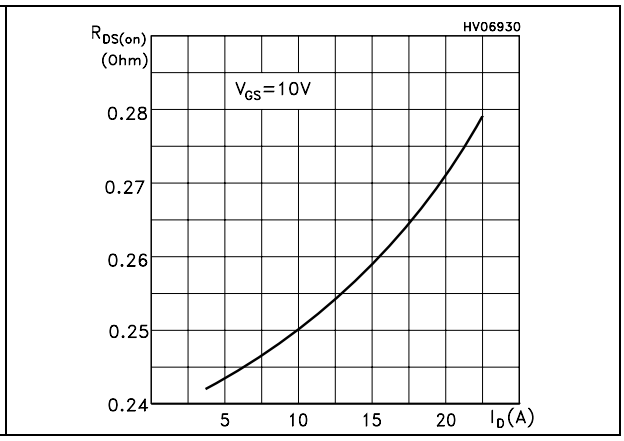

Figure 10. Gate charge vs gate-source voltage

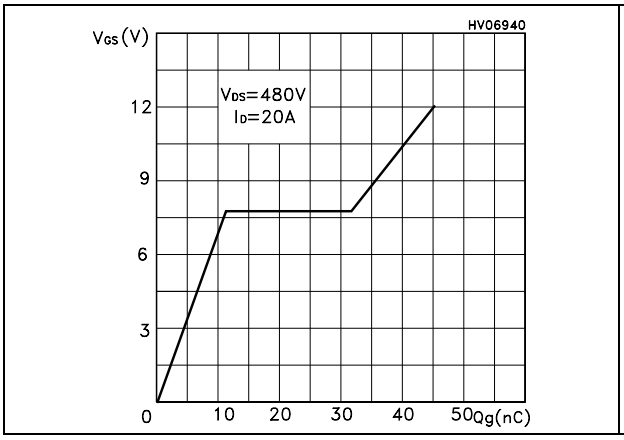

Figure 11. Capacitance variations

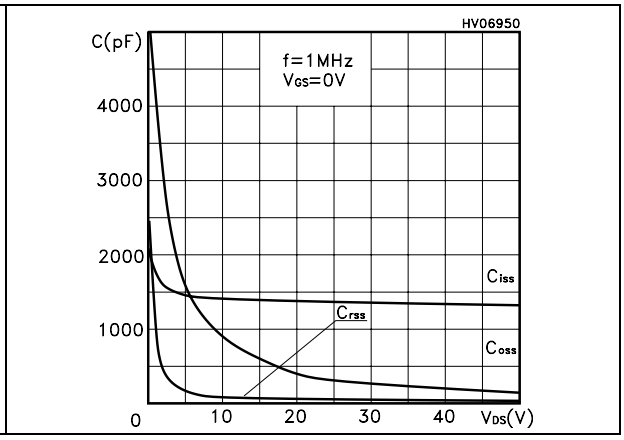

Figure 12. Normalized gate threshold voltage vs temperature

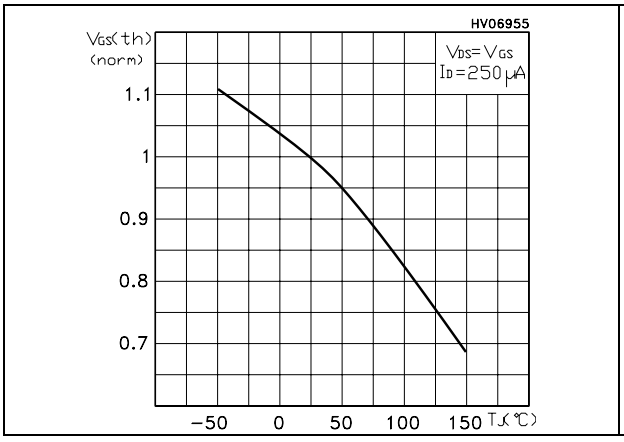

Figure 13. Normalized on resistance vs temperature

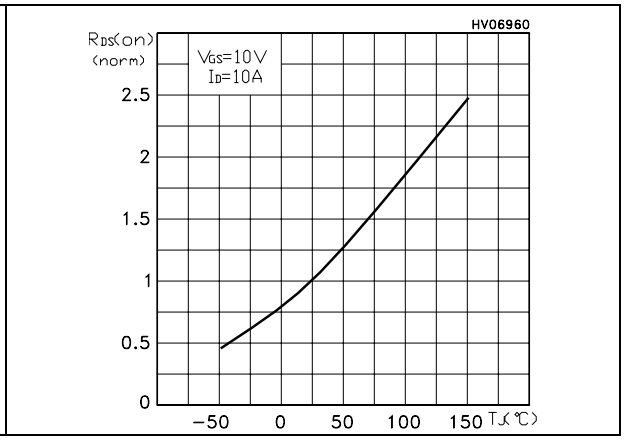

Figure 14. Source-drain diode forward characteristics

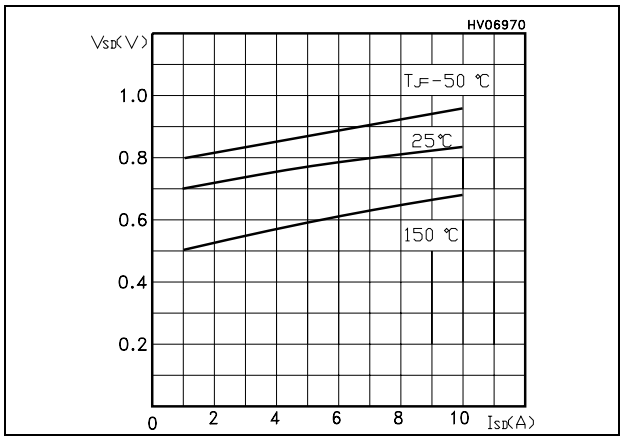

3 Test circuit

Figure 15. Switching times test circuit for resistive load

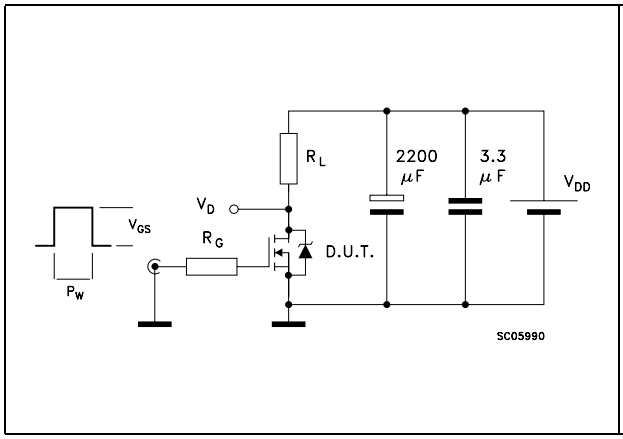

Figure 16. Gate charge test circuit

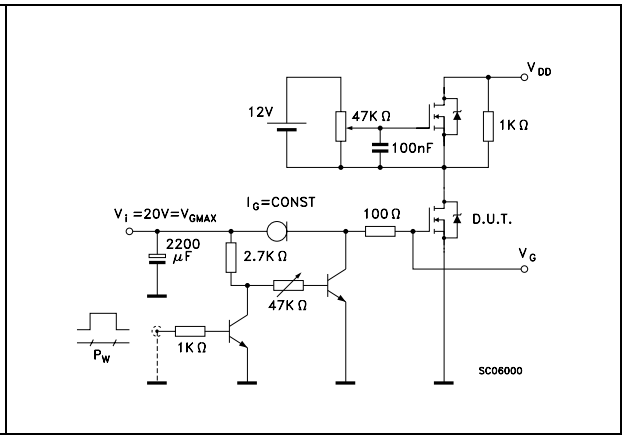

Figure 17. Test circuit for inductive load switching and diode recovery times

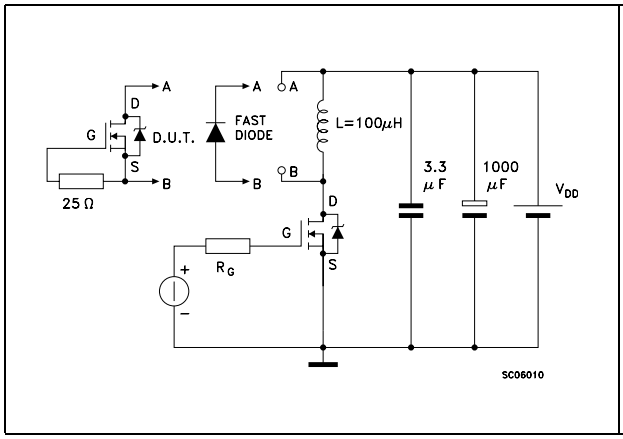

Figure 18. Unclamped inductive load test circuit

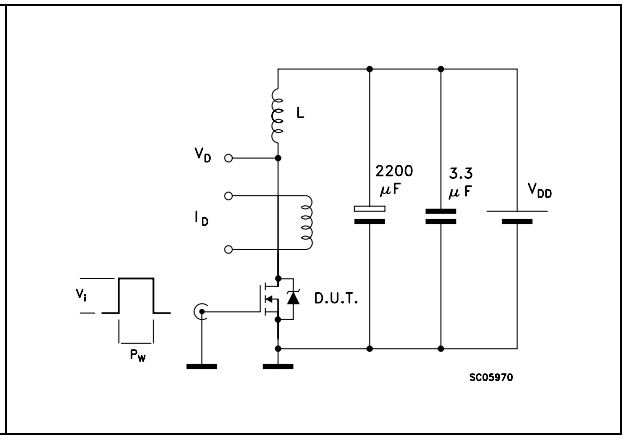

Figure 19. Unclamped inductive waveform

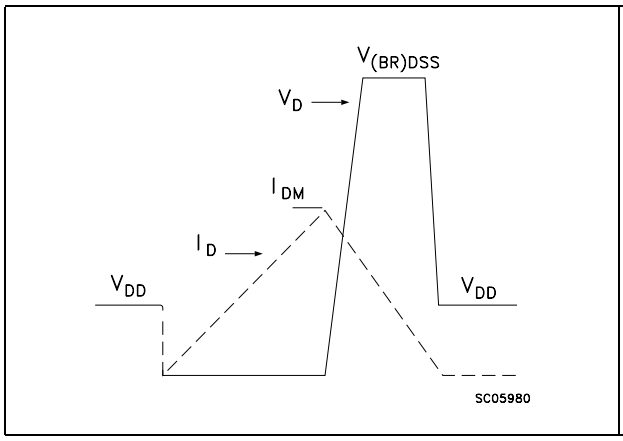

Figure 20. Switching time waveform

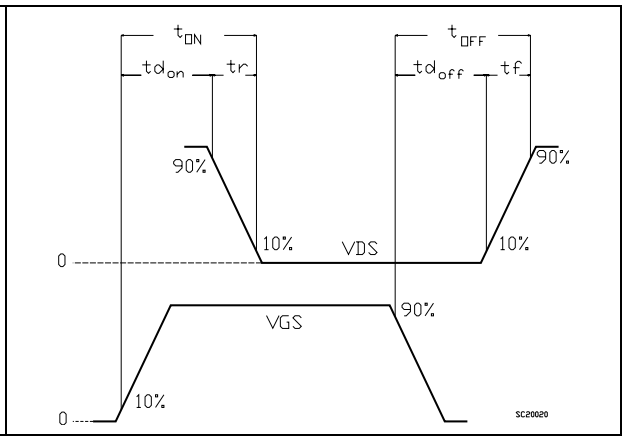

4 Package mechanical data

In order to meet environmental requirements, ST offers these devices in ECOPACK® packages. These packages have a Lead-free second level interconnect . The category of second level interconnect is marked on the package and on the inner box label, in compliance with JEDEC Standard JESD97. The maximum ratings related to soldering conditions are also marked on the inner box label. ECOPACK is an ST trademark. ECOPACK specifications are available at: *www.st.com*

TO-247 MECHANICAL DATA

DIM.	mm.			inch		
	MIN.	TYP	MAX.	MIN.	TYP.	MAX.
A	4.85		5.15	0.19		0.20
A1	2.20		2.60	0.086		0.102
b	1.0		1.40	0.039		0.055
b1	2.0		2.40	0.079		0.094
b2	3.0		3.40	0.118		0.134
c	0.40		0.80	0.015		0.03
D	19.85		20.15	0.781		0.793
E	15.45		15.75	0.608		0.620
e		5.45			0.214	
L	14.20		14.80	0.560		0.582
L1	3.70		4.30	0.14		0.17
L2		18.50			0.728	
øP	3.55		3.65	0.140		0.143
øR	4.50		5.50	0.177		0.216
S		5.50			0.216	

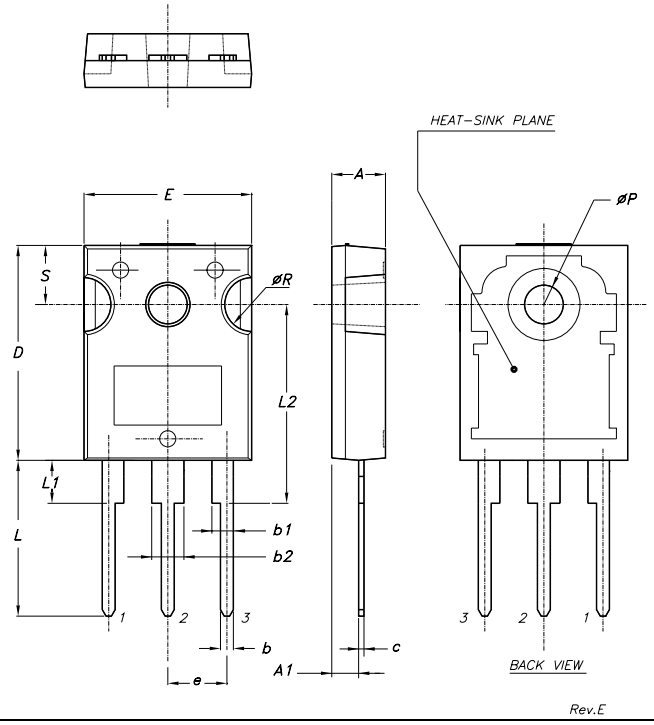

TO-220 MECHANICAL DATA

DIM.	mm.			inch		
	MIN.	TYP	MAX.	MIN.	TYP.	MAX.
A	4.40		4.60	0.173		0.181
b	0.61		0.88	0.024		0.034
b1	1.15		1.70	0.045		0.066
c	0.49		0.70	0.019		0.027
D	15.25		15.75	0.60		0.620
E	10		10.40	0.393		0.409
e	2.40		2.70	0.094		0.106
e1	4.95		5.15	0.194		0.202
F	1.23		1.32	0.048		0.052
H1	6.20		6.60	0.244		0.256
J1	2.40		2.72	0.094		0.107
L	13		14	0.511		0.551
L1	3.50		3.93	0.137		0.154
L20		16.40			0.645	
L30		28.90			1.137	
øP	3.75		3.85	0.147		0.151
Q	2.65		2.95	0.104		0.116

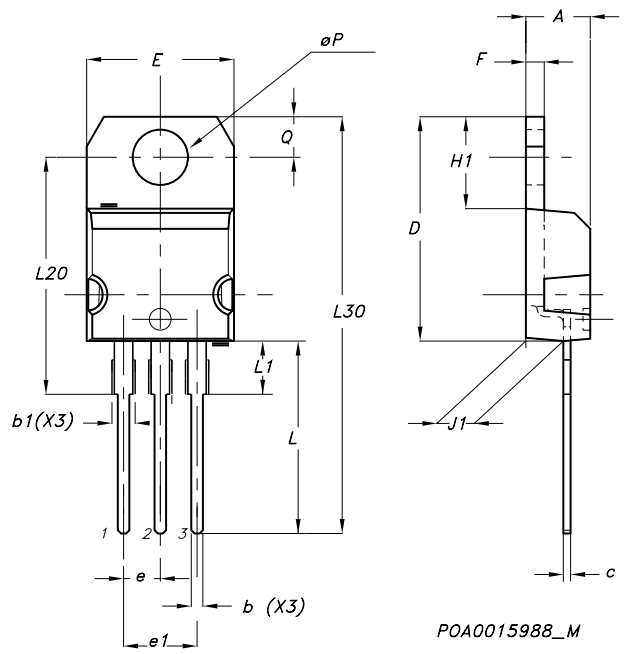

TO-262 (I^2PAK) MECHANICAL DATA

DIM.	mm.			inch		
	MIN.	TYP	MAX.	MIN.	TYP.	MAX.
A	4.40		4.60	0.173		0.181
A1	2.40		2.72	0.094		0.107
b	0.61		0.88	0.024		0.034
b1	1.14		1.70	0.044		0.066
c	0.49		0.70	0.019		0.027
c2	1.23		1.32	0.048		0.052
D	8.95		9.35	0.352		0.368
e	2.40		2.70	0.094		0.106
e1	4.95		5.15	0.194		0.202
E	10		10.40	0.393		0.410
L	13		14	0.511		0.551
L1	3.50		3.93	0.137		0.154
L2	1.27		1.40	0.050		0.055

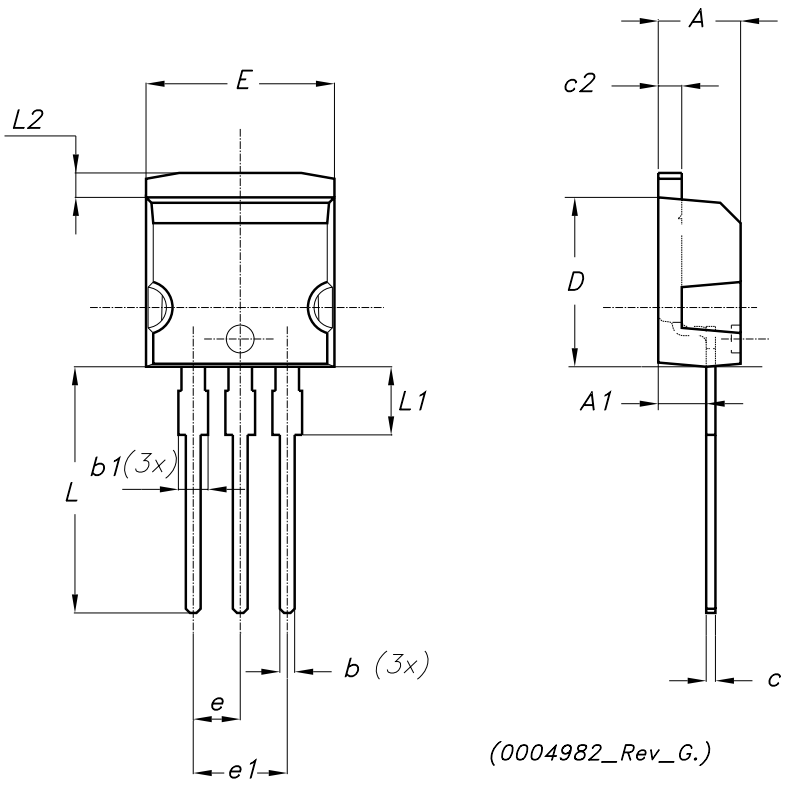

TO-220FP MECHANICAL DATA

DIM.	mm.			inch		
	MIN.	TYP	MAX.	MIN.	TYP.	MAX.
A	4.4		4.6	0.173		0.181
B	2.5		2.7	0.098		0.106
D	2.5		2.75	0.098		0.108
E	0.45		0.7	0.017		0.027
F	0.75		1	0.030		0.039
F1	1.15		1.7	0.045		0.067
F2	1.15		1.7	0.045		0.067
G	4.95		5.2	0.195		0.204
G1	2.4		2.7	0.094		0.106
H	10		10.4	0.393		0.409
L2		16			0.630	
L3	28.6		30.6	1.126		1.204
L4	9.8		10.6	.0385		0.417
L5	2.9		3.6	0.114		0.141
L6	15.9		16.4	0.626		0.645
L7	9		9.3	0.354		0.366
Ø	3		3.2	0.118		0.126

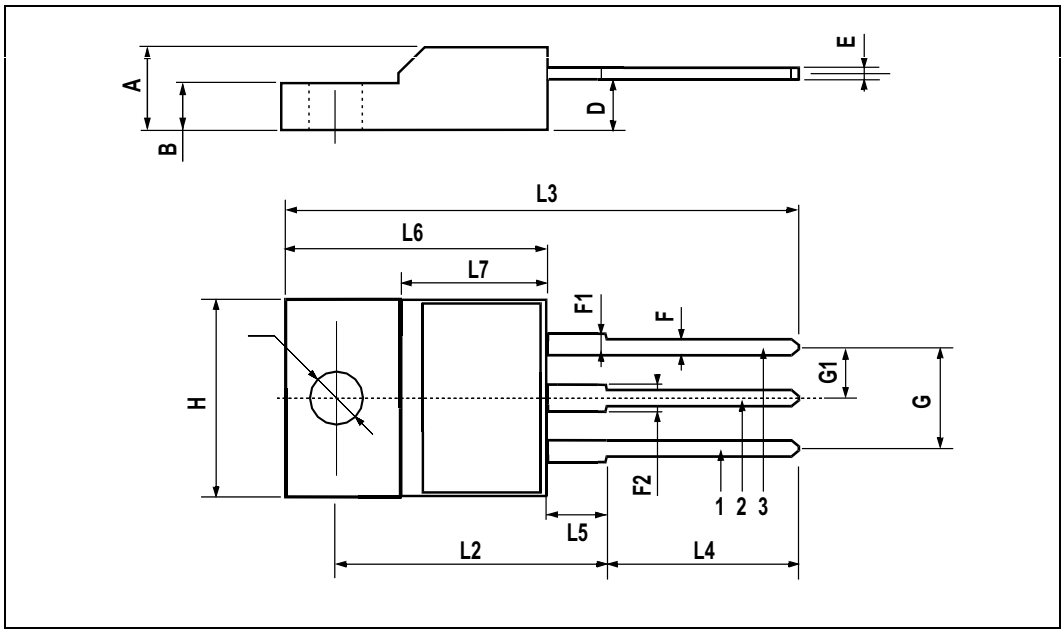

D^2PAK MECHANICAL DATA

DIM.	mm.			inch		
	MIN.	TYP	MAX.	MIN.	TYP.	MAX.
A	4.4		4.6	0.173		0.181
A1	2.49		2.69	0.098		0.106
A2	0.03		0.23	0.001		0.009
B	0.7		0.93	0.027		0.036
B2	1.14		1.7	0.044		0.067
C	0.45		0.6	0.017		0.023
C2	1.23		1.36	0.048		0.053
D	8.95		9.35	0.352		0.368
D1		8			0.315	
E	10		10.4	0.393		
E1		8.5			0.334	
G	4.88		5.28	0.192		0.208
L	15		15.85	0.590		0.625
L2	1.27		1.4	0.050		0.055
L3	1.4		1.75	0.055		0.068
M	2.4		3.2	0.094		0.126
R		0.4			0.015	
V2	0º		4º			

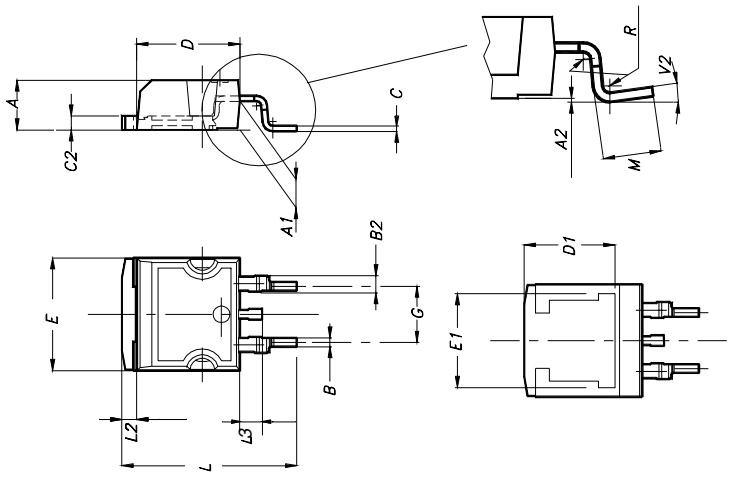

5 Packaging mechanical data

D²PAK FOOTPRINT

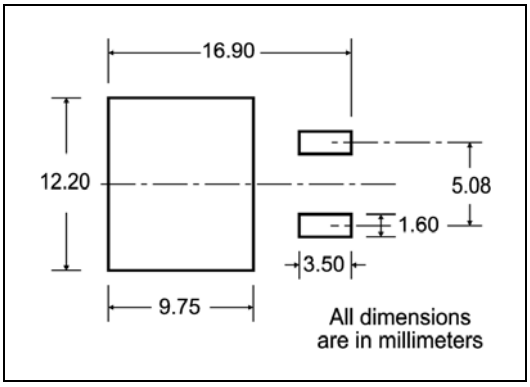

TAPE AND REEL SHIPMENT

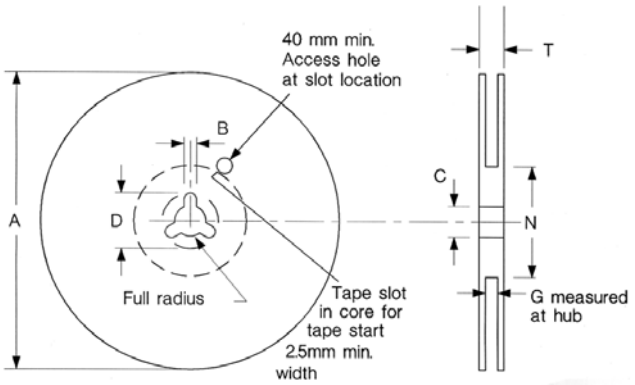

REEL MECHANICAL DATA

DIM.	mm		inch	
	MIN.	MAX.	MIN.	MAX.
A		330		12.992
B	1.5		0.059	
C	12.8	13.2	0.504	0.520
D	20.2		0795	
G	24.4	26.4	0.960	1.039
N	100		3.937	
T		30.4		1.197

BASE QTY	BULK QTY
1000	1000

TAPE MECHANICAL DATA

DIM.	mm		inch	
	MIN.	MAX.	MIN.	MAX.
A0	10.5	10.7	0.413	0.421
B0	15.7	15.9	0.618	0.626
D	1.5	1.6	0.059	0.063
D1	1.59	1.61	0.062	0.063
E	1.65	1.85	0.065	0.073
F	11.4	11.6	0.449	0.456
K0	4.8	5.0	0.189	0.197
P0	3.9	4.1	0.153	0.161
P1	11.9	12.1	0.468	0.476
P2	1.9	2.1	0.075	0.082
R	50		1.574	
T	0.25	0.35	0.0098	0.0137
W	23.7	24.3	0.933	0.956

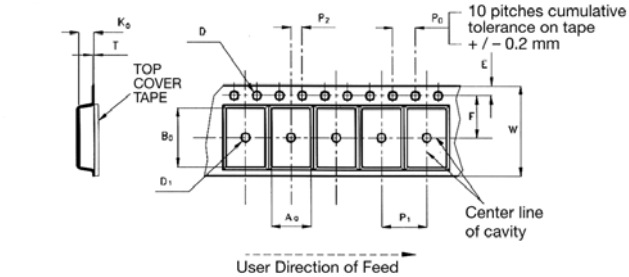

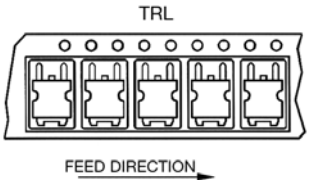

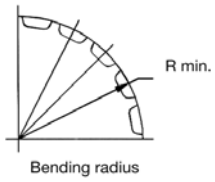

* on sales type

6 Revision history

Table 9. Document revision history

Date	Revision	Changes
26-Jul-2004	8	First Release
17-Feb-2005	9	Insert the TO-247 package
25-Oct-2006	10	The document has been reformatted
18-Dec-2006	11	Text updates on *Table 5.*
27-Aug-2007	12	Updated *Figure 2* and *Figure 4*

Please Read Carefully:

Information in this document is provided solely in connection with ST products. STMicroelectronics NV and its subsidiaries (“ST”) reserve the right to make changes, corrections, modifications or improvements, to this document, and the products and services described herein at any time, without notice.

All ST products are sold pursuant to ST’s terms and conditions of sale.

Purchasers are solely responsible for the choice, selection and use of the ST products and services described herein, and ST assumes no liability whatsoever relating to the choice, selection or use of the ST products and services described herein.

No license, express or implied, by estoppel or otherwise, to any intellectual property rights is granted under this document. If any part of this document refers to any third party products or services it shall not be deemed a license grant by ST for the use of such third party products or services, or any intellectual property contained therein or considered as a warranty covering the use in any manner whatsoever of such third party products or services or any intellectual property contained therein.

UNLESS OTHERWISE SET FORTH IN ST’S TERMS AND CONDITIONS OF SALE ST DISCLAIMS ANY EXPRESS OR IMPLIED WARRANTY WITH RESPECT TO THE USE AND/OR SALE OF ST PRODUCTS INCLUDING WITHOUT LIMITATION IMPLIED WARRANTIES OF MERCHANTABILITY, FITNESS FOR A PARTICULAR PURPOSE (AND THEIR EQUIVALENTS UNDER THE LAWS OF ANY JURISDICTION), OR INFRINGEMENT OF ANY PATENT, COPYRIGHT OR OTHER INTELLECTUAL PROPERTY RIGHT.

UNLESS EXPRESSLY APPROVED IN WRITING BY AN AUTHORIZED ST REPRESENTATIVE, ST PRODUCTS ARE NOT RECOMMENDED, AUTHORIZED OR WARRANTED FOR USE IN MILITARY, AIR CRAFT, SPACE, LIFE SAVING, OR LIFE SUSTAINING APPLICATIONS, NOR IN PRODUCTS OR SYSTEMS WHERE FAILURE OR MALFUNCTION MAY RESULT IN PERSONAL INJURY, DEATH, OR SEVERE PROPERTY OR ENVIRONMENTAL DAMAGE. ST PRODUCTS WHICH ARE NOT SPECIFIED AS "AUTOMOTIVE GRADE" MAY ONLY BE USED IN AUTOMOTIVE APPLICATIONS AT USER’S OWN RISK.

Resale of ST products with provisions different from the statements and/or technical features set forth in this document shall immediately void any warranty granted by ST for the ST product or service described herein and shall not create or extend in any manner whatsoever, any liability of ST.

ST and the ST logo are trademarks or registered trademarks of ST in various countries.

Information in this document supersedes and replaces all information previously supplied.

The ST logo is a registered trademark of STMicroelectronics. All other names are the property of their respective owners.

© 2007 STMicroelectronics - All rights reserved

STMicroelectronics group of companies

Australia - Belgium - Brazil - Canada - China - Czech Republic - Finland - France - Germany - Hong Kong - India - Israel - Italy - Japan - Malaysia - Malta - Morocco - Singapore - Spain - Sweden - Switzerland - United Kingdom - United States of America

www.st.com