THIS DRAWING IS UNPUBLISHED. RELEASED FOR PUBLICATION ,19 .
© COPYRIGHT 19 BY AMP INCORPORATED. ALL RIGHTS RESERVED.

LOC	DIST
AJ	16

REVISIONS

P	LTR	DESCRIPTION	DATE	DWN	APVD
	T	REV PER OU20-0563-00	19OCT00	MO	JL

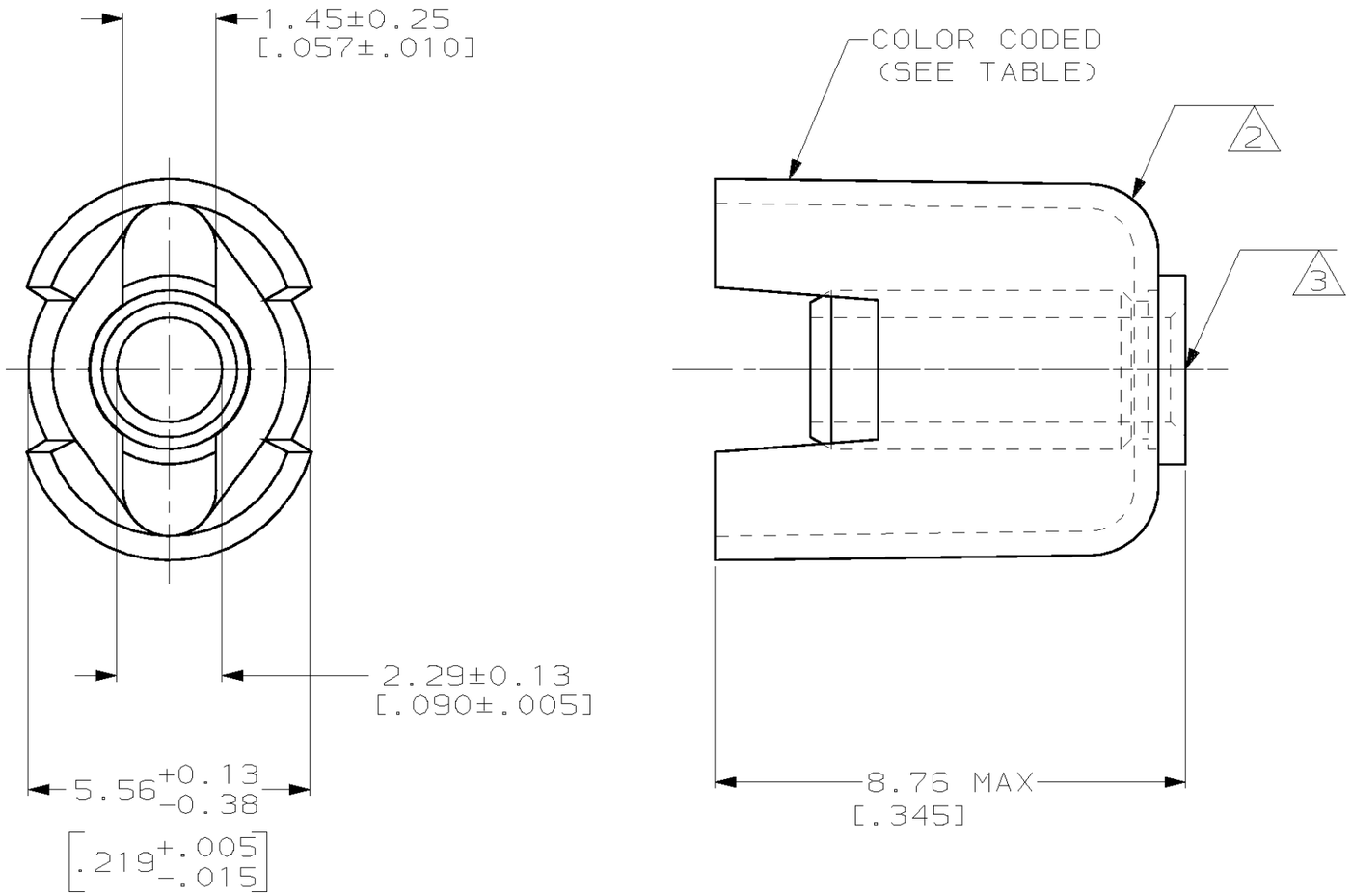

1 ZINC PLATE PER QQ-Z-325
2 COPPER PER QQ-C-576
3 BRASS PER ASTM-B-16
4 TIN PLATE PER MIL-T-10727

INSULATION DIA: 1.50-2.16
[.059-.085]

	WEIGHT	COLOR	FINISH	PART NUMBER
	.0212 OZ	AS PLATED	4	2-323931-2
OBSOLETE	–	AS PLATED	4	2-323931-1
	.0212 OZ	AS PLATED	1	323931

THIS DRAWING IS A CONTROLLED DOCUMENT.

DIMENSIONS: mm [INCHES]

TOLERANCES UNLESS OTHERWISE SPECIFIED:
0 PLC ±-
1 PLC ±-
2 PLC ±-
3 PLC ±-
4 PLC ±-
ANGLES ±-

MATERIAL SEE NOTES
FINISH SEE NOTES

DWN J.L.GROFT 1-3-97
CHK S.W.BURKHOLDER 1-3-97
APVD S.W.BURKHOLDER 1-3-97
PRODUCT SPEC –
APPLICATION SPEC –
WEIGHT –

AMP Incorporated
Harrisburg, PA 17105-3608

NAME
FERRULE ASSEMBLY, TERMASHIELD

SIZE A3 | CAGE CODE 00779 | DRAWING NO C-323931

CUSTOMER DRAWING

SCALE 10:1 | SHEET 1 OF 1 | REV T

AMP 1470-19 REV 23FEB95

19-OCT-00 08:29:23 amp06572 /home/amp06572/edmmod