GC4210 – GC4275

CONTROL DEVICES – HIGH SPEED PIN DIODES

RoHS Compliant e4 RoHS

DESCRIPTION

The GC4200 series are high speed (cathode base) PIN diodes made with high resistivity epitaxial silicon material. These diodes are passivated with silicon dioxide for high stability and reliability and have been proven by thousands of device hours in high reliability systems.

These devices can withstand storage temperatures from -65°C to +200°C and will operate over the range from -55°C to +150°C. All devices meet or exceed military environmental specifications of MIL-PRF-19500. The GC4200 series will operate with as little as +10 mA forward bias.

This series of diodes meets RoHS requirements per EU Directive 2002/95/EC. The standard terminal finish is gold unless otherwise specified. Consult the factory if you have special requirements.

APPLICATIONS

The GC4200 series can be used in RF circuits as an on/off element, as a switch, or as a current controlled resistor in attenuators extending over the frequency range from UHF through Ku band.

Switch applications include high speed switches (ECM systems), TR switches, channel or antenna selection switches (telecommunications), duplexers (radar) and digital phase shifters (phased arrays).

The GC4200 series are also used as passive and active limiters for low to moderate RF power levels.

Attenuator type applications include amplitude modulators, AGC attenuators, power levelers and level set attenuators.

ABSOLUTE MAXIMUM RATINGS AT 25º C (UNLESS OTHERWISE SPECIFIED)

Rating	Symbol	Value	Unit
Maximum Leakage Current @80% of Minimum Rated V_B	I_R	0.5	uA
Storage Temperature	T_{STG}	-65 to +200	ºC
Operating Temperature	T_{OP}	-55 to +150	ºC

KEY FEATURES

- Available as packaged devices or as chips for hybrid applications
- Low Loss
- Suitable for application to 18Ghz
- High Speed
- Low Insertion Loss
- High Isolation
- RoHS Compliant [1]

[1] Most of our devices are supplied with Gold plated terminations. Other terminal finishes are available on request. Consult factory for details.

APPLICATIONS/BENEFITS

- RF / Microwave Switching
- Duplexers
- Digital Phase Shifting
- Phase Array Radar

IMPORTANT: For the most current data, consult *MICROSEMI*'s website: ***www.MICROSEMI.com***

Specifications are subject to change, consult factory for the latest information.

These devices are ESD sensitive and must be handled use using ESD precautions.

Copyright © 2006

Microsemi
Microwave Products
75 Technology Drive, Lowell, MA. 01851, 978-442-5600, Fax: 978-937-3748

RoHS Compliant e4 RoHS

DEVICE ELECTRICAL PARAMETERS @ 25°C (unless otherwise specified)					
Model Number [1]	**V_b(V)** I_R=10µA **(Min)**	**C_j (pF)** [2] @V_R=10V **(Max)**	**R_s(Ω)** [3] @20 mA **(Max)**	**T_L(nS)** I_R=6mA/I_F=10mA **(Typ)**	Thermal Resistance **θ (˚C/W) (Max)**
GC4270	70	0.06	1.5	100	80
GC4271	70	0.10	1.0	100	70
GC4272	70	0.20	0.8	100	70
GC4273	70	0.30	0.7	100	60
GC4274	70	0.40	0.6	100	50
GC4275	70	0.50	0.5	100	40
GC4210	100	0.06	1.5	200	80
GC4211	100	0.10	1.0	200	70
GC4212	100	0.20	0.75	200	70
GC4213	100	0.30	0.6	200	60
GC4214	100	0.40	0.5	200	50
GC4215	100	0.50	0.35	200	40
GC4220	250	0.06	2.5	500	80
GC4221	250	0.10	2.0	500	70
GC4222	250	0.20	1.5	500	70
GC4223	250	0.30	1.0	500	60
GC4224	250	0.40	0.8	500	50
GC4225	250	0.50	0.6	500	40

Notes:
1. This series of devices is available in standard case styles 00, 30, and 35. Many other styles are available on request.
2. Capacitance is measured at 1 MHz.
3. Resistance is measured AT 1 GHz using transmission loss techniques.

The junction capacitance specified is for a 00 (chip) package style. Standard wafer evaluation and characterization is completed using a style 30 package. Diodes are available in many case styles. Each type offers performance trade-offs. The proper choice of package style depends on the end application and operating environment. Consult factory for assistance. Reverse polarity diodes (NIP) and higher voltage PIN and NIP diodes are also available. (See data sheets for GC4300, GC4400, and GC4500 series respectively.)

Copyright © 2006
Rev.: 2009-02-19

Microsemi
Microwave Products
75 Technology Drive, Lowell, MA. 01851, 978-442-5600, Fax: 978-937-3748

RS VS IF CURVES

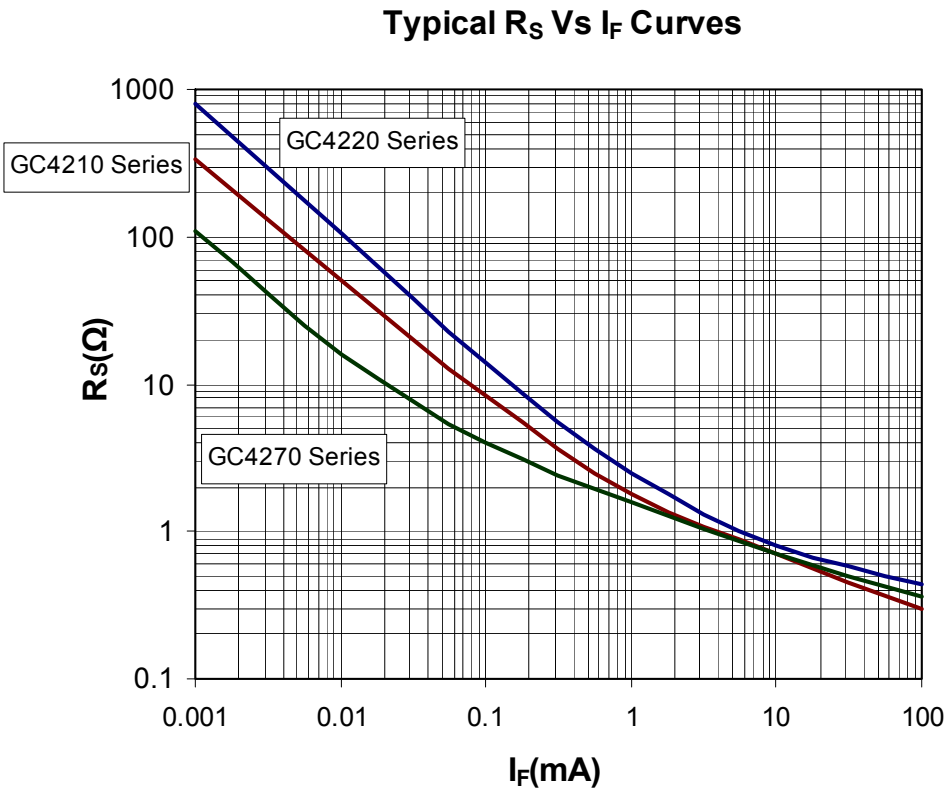

RoHS Compliant e4 RoHS

PACKAGE STYLE 00

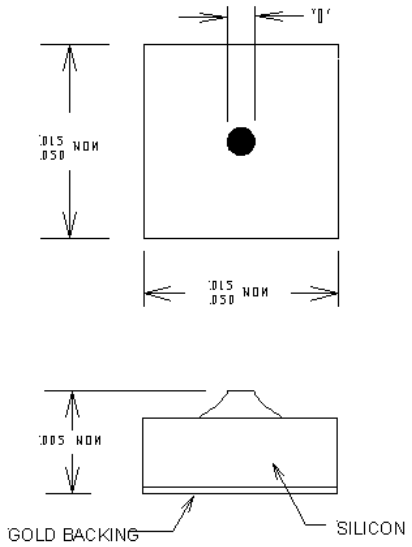

Dimensions vary by model. Consult factory for details.

PACKAGE STYLE 30

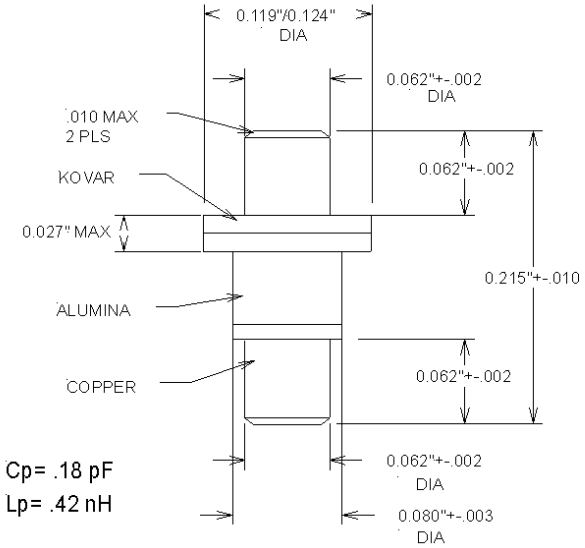

PACKAGE STYLE 35

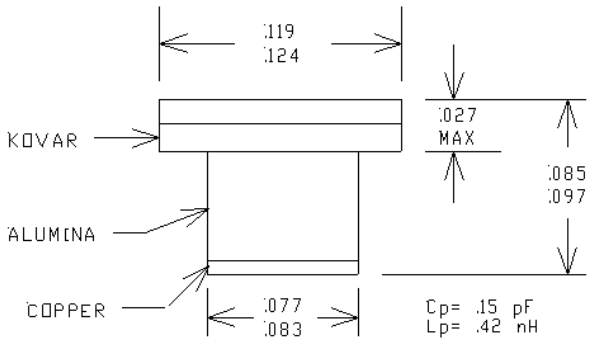

PACKAGE STYLE 115

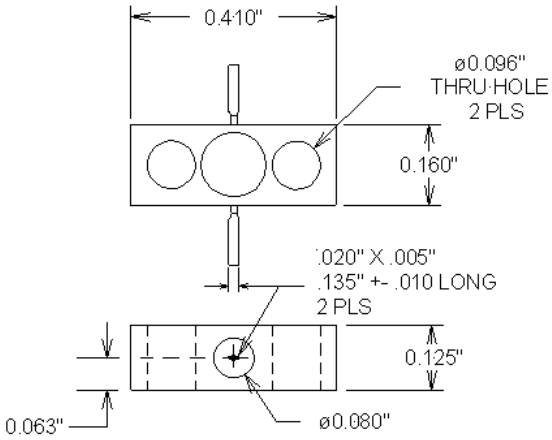

OUTLINE SAME FOR 115-2 EXCEPT COPPER HEATSINK INSERT

50 OHM BOLT CHANNEL MODULE

OTHER PACKAGE STYLES AVAILABLE ON REQUEST
CONSULT FACTORY

Copyright © 2006
Rev.: 2009-02-19

Microsemi
Microwave Products
75 Technology Drive, Lowell, MA. 01851, 978-442-5600, Fax: 978-937-3748