REVISIONS			
REV	DESCRIPTION	DATE	APPROVED
01_0	RELEASED	KYLE 7-8-97	7/14/97

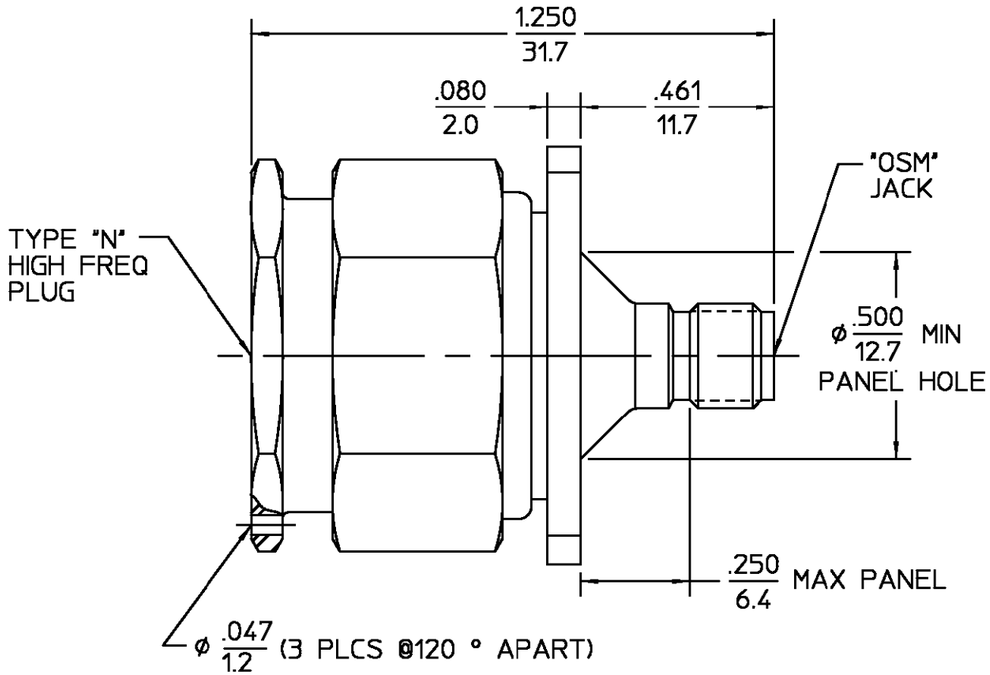

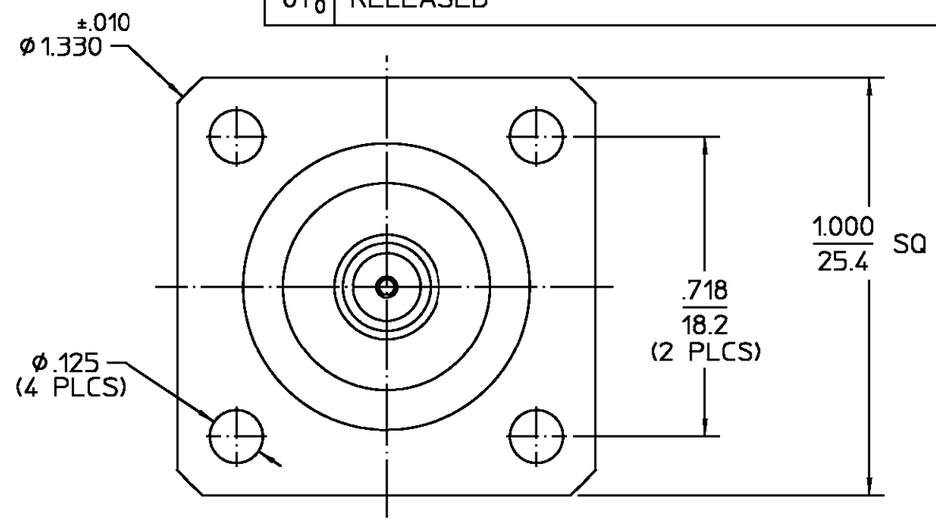

COMPONENT	MATERIAL	FINISH
HOUSING COUPLING NUT	STAINLESS STEEL PER ASTM-A484 AND ASTM-A582, TYPE 303	PASSIVATE PER QQ-P-35
DIELECTRIC	PTFE FLUOROCARBON PER ASTM-D-1457	N/A
CENTER CONTACT	BERYLLIUM COPPER PER ASTM-B-196 OR ASTM-B-197, ALLOY C17300, CONDITION H	GOLD PLATE PER MIL-G-45204
RETAINING RING	BERYLLIUM COPPER PER ASTM-B-194, ALLOY C17200, CONDITION H	N/A
GASKET	SILICONE RUBBER PER ZZ-R-765	N/A

NOTES:

HIGH FREQ. TO 18.0 GHz

MAX. VSWR .83 + .023 f(GHz)

.XXX = in

XX.X = mm (REF)

UNLESS OTHERWISE SPECIFIED DIMENSIONS ARE IN INCHES

FRAC.	DEC.	ANGLES
± 1/64	±.005	± 1°

DRAWN BY KYLE LE DATE 7-8-97

CHECKED BY

APP'D BY 7/14/97

AMP

AMP Incorporated

140 Fourth Avenue
Waltham, MA 02451-7599

These drawings and specifications are the property of M/A COM Interconnect Div. and shall not be reproduced or copied or used in whole or in part as the basis for the manufacture or sale o f item(s) without written permission.

USE ASS'Y PROCEDURE

NO. A.P. N/A

TITLE HIGH FREQ "OSN" PLUG TO "OSM" JACK FLANGE MOUNT-ADAPTER

SIZE	CODE IDENT NO.		REV
B	26805	3682-2242-00	01_0

SCALE 3:1 SHEET 1 OF 1

CUSTOMER DRAWING

AMP PART # 1058666-1

SHEET 1 OF 1 REV A