THIS DRAWING IS UNPUBLISHED. RELEASED FOR PUBLICATION -,- .
© COPYRIGHT - By - ALL RIGHTS RESERVED.

LOC	DIST
DF	DO

REVISIONS

P	LTR	DESCRIPTION	DATE	DWN	APVD
	N	REVISED PER ECO-13-011791	22AUG13	MGM	CT

1. THIS RECEPTACLE WILL MATE WITH ANY PLUG CONNECTOR WITH THE SAME INSERT ARRANGEMENT AS DEFINED BY MS18273-2.
2. CONNECTOR SUPPLIED WITHOUT CONTACTS; SHOWN FOR ILLUSTRATION ONLY.
3. BE-CU RETENTION CLIPS ARE INCLUDED IN INSERT AND INSTALLED WITH TINES POINTING TOWARDS MATING FACE.
4. OVERALL DIMENSIONS DO NOT INCLUDE RAISED CAVITY IDENTIFICATION.
5. MARKING FAR SIDE REFERS TO WIDE SIDE OF KEYSTONE. NEAR SIDE REFERS TO NARROW SIDE OF KEYSTONE
6. 100% INSPECTION REQUIRED PER BOEING 1B01:
   A. VISUAL
   B. DWV
   C. IR
7. CUSTOMER REQUIRES SINGLE LOT DATE CODE.
8. SPECIAL REQUIREMENTS:
   A.TEST TWO CONNECTORS PER LOT FOR COMPLIANCE TO GROMMET PEEL STRENGTH REQUIREMENTS.
   B.TEST ALL CIRCUIT CAVITIES FOR MISALIGNMENT OR EXCESSIVE ADHESIVE.

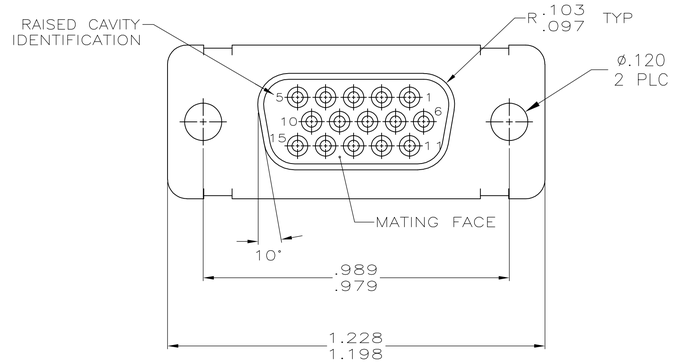

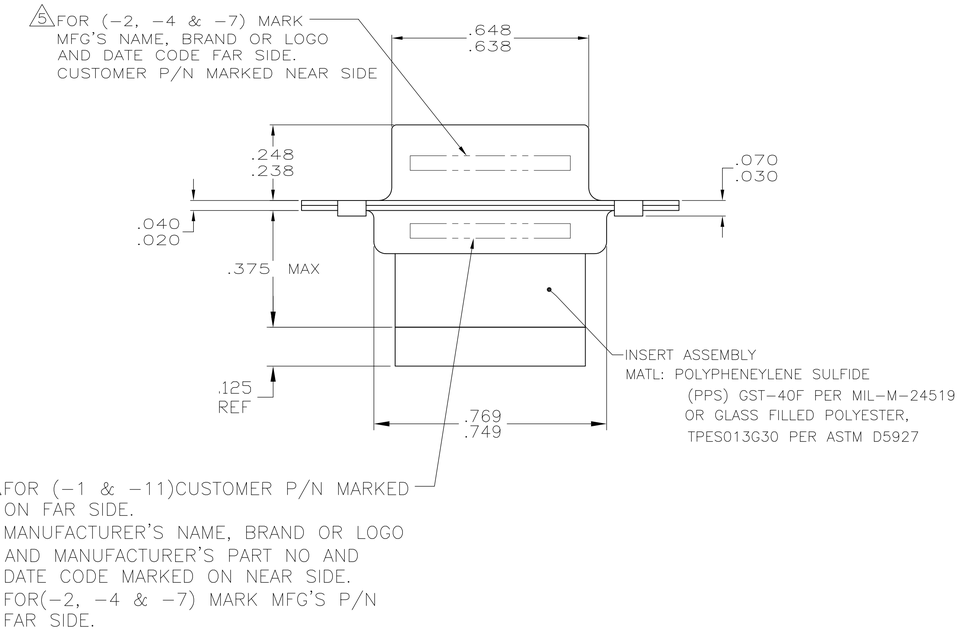

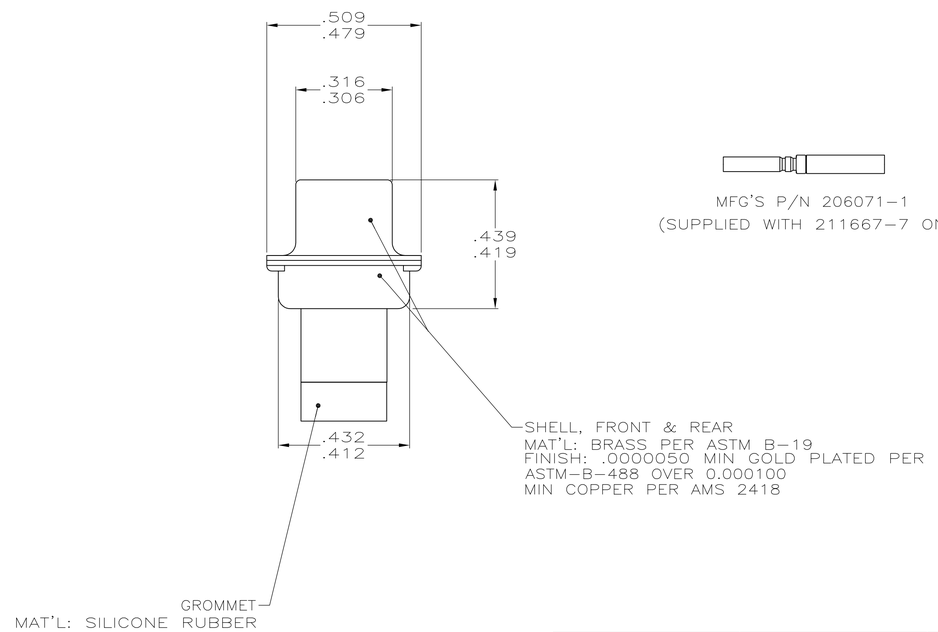

MFG'S P/N 206071-1
(SUPPLIED WITH 211667-7 ONLY)

6 7	1B01-025RHW	1-211667-1	1-211667-1
CONTACTS INCLUDED	B010648-0002	211667-7	211667-7
---	---	211667-4	211667-4
7 8	2A065-019V	211667-2	211667-2
6	1B01-025	211667-1	211667-1
REMARKS	CUSTOMER PART NO.	MARKED MFG'S P/N	PART NO

THIS DRAWING IS A CONTROLLED DOCUMENT.

DIMENSIONS: INCHES

TOLERANCES UNLESS OTHERWISE SPECIFIED:
0 PLC ± -
1 PLC ± -
2 PLC ± -
3 PLC ± .005
4 PLC ± -
ANGLES ± 1°

MATERIAL: SEE CALLOUTS
FINISH: SEE CALLOUTS

DWN C.C.THOMAS 3-9-07
CHK N.DEIBERT 3-9-07
APVD N.DEIBERT 3-9-07
PRODUCT SPEC —
APPLICATION SPEC —
WEIGHT —

TE Connectivity

NAME: RECEPTACLE ASSY,AMPLIMITE,15 POSN., SIZE 1, SERIES 90,NON-MAGNETIC WITH GROMMET

SIZE	CAGE CODE	DRAWING NO	RESTRICTED TO
A1	00779	C-211667	—

CUSTOMER DRAWING | SCALE 4:1 | SHEET 1 OF 1 | REV N

4805 (3/11)