REVISIONS			
REV	DESCRIPTION	DATE	APPROVED
01 4	REVISED	KYLE 7-25-97	8/5/97

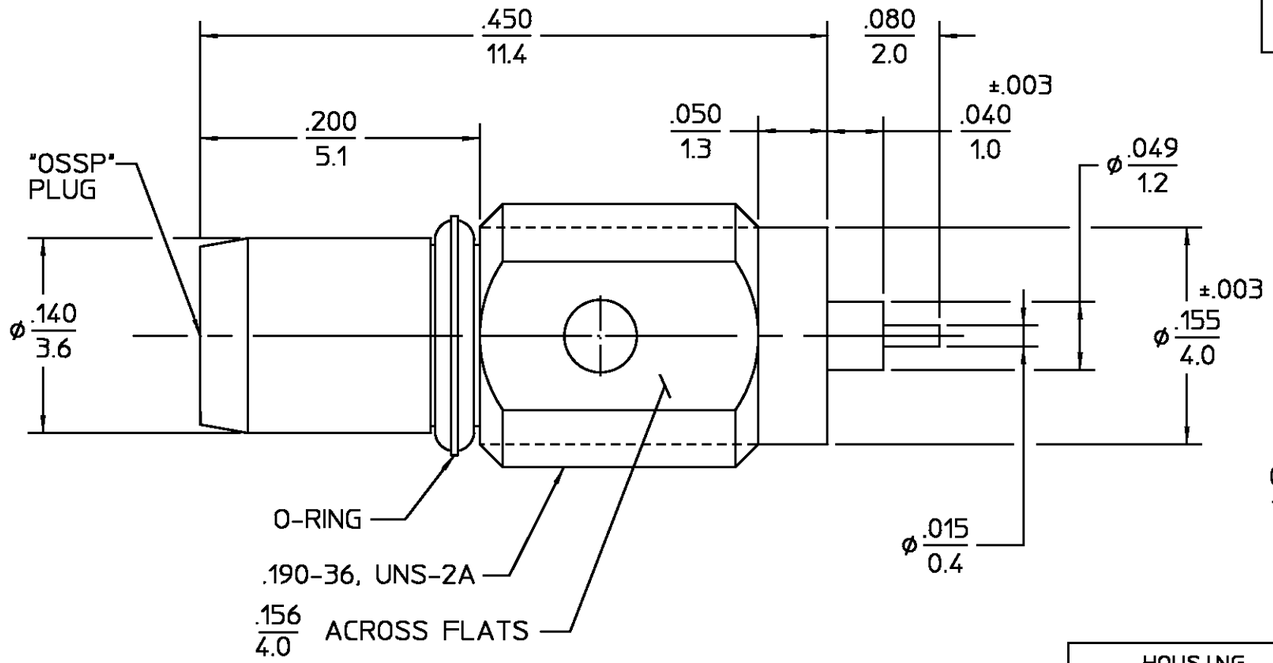

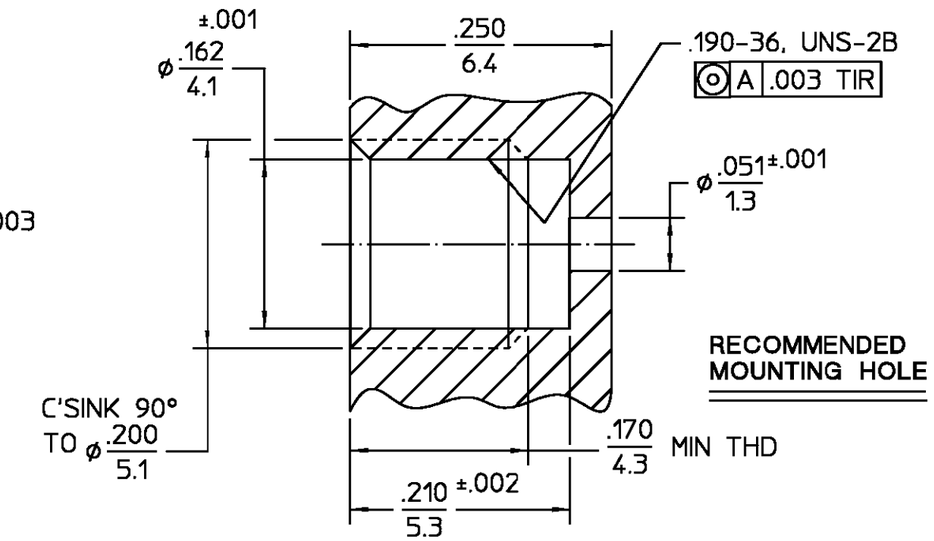

ELECTRICAL	MECHANICAL	ENVIRONMENTAL
Nominal Impedance (Ohms) 50	Interface Dimensions PER M/A-COM CATALOG	Temperature Rating -65° TO +125°C
Frequency Range (GHz) DC to 28.0	Mating Characteristics:	Vibration MIL-STD-202, Method 204, Condition D
Volt Rating (VRMS MAX) @ Sea Level 250	Insertion (MAX Lbs) 2.0	Shock MIL-STD-202, Method 213, Condition I
VSWR 1.33:1 @ 28.0 GHz 1.05 + .001f(GHz)	Withdrawal (MIN Oz) 0.5	Thermal Shock MIL-STD-202, Method 107, Condition B
Insertion Loss (dB MAX) $.04\sqrt{f(GHz)}$	Force to Engage and Disengage (In-Lbs MAX) 0.4	Moisture Resistance MIL-STD-202, Method 106
RF Leakage (dB MIN) -[60-f(GHz)]	Center Contact Captivation Axial (Lbs) 4.0	Corrosion - MIL-STD-202, Method 101, Condition B, 5% salt spray
Corona, 70,000 Ft (VRMS MIN) 250		
Dielectric Withstanding Voltage (VRMS MIN) @ Sea Level 675		
Contact Resistance (Milliohms MAX) Center Contact 6.0		
Outer Contact 3.0		
RF High Potential @ Sea Level (VRMS MIN @ 5 MHz) 675		
I.R.(Megohms MIN) 5,000		

.XXX = in
XX.X = mm (REF)

COMPONENT	MATERIAL	FINISH
HOUSING	STAINLESS STEEL PER ASTM-A484 AND ASTM-A582, TYPE 303	PASSIVATE PER QQ-P-35
DIELECTRIC	PTFE FLUOROCARBON PER ASTM-D-1457	N/A
CENTER CONTACT	BERYLLIUM COPPER PER ASTM-B-196 OR ASTM-B-197, ALLOY C17300, CONDITION H	GOLD PLATE PER MIL-G-45204
O-RING	FLUOROSILICONE 60 (DUROMETER) PER MIL-P-25988, CLASS 1, TYPE 1	N/A

UNLESS OTHERWISE SPECIFIED DIMENSIONS ARE IN INCHES

FRAC.	DEC.	ANGLES
± 1/64	±.005	± 1°

		DATE
DRAWN BY	PCV	9-15-86
CHECKED BY	MH/M	10-1-86
APP'D BY	PCV	10-20-86

AMP

AMP Incorporated
140 Fourth Avenue
Waltham, MA 02451-7599

These drawings and specifications are the property of M/A COM Interconnect Div. and shall not be reproduced or copied or used in whole or in part as the basis for the manufacture or sale o f item(s) without written permission.

USE ASS'Y PROCEDURE

NO. A.P. 47-014

TITLE "OSSP" PANEL FEEDTHRU PLUG RECEPTACTLE-STRAIGHT TERMINAL

SIZE	CODE IDENT NO.		REV
B	26805	4757-5006-02	01 4

SCALE 10:1 SHEET 1 OF 1

CUSTOMER DRAWING

AMP PART # 1059903-1
SHEET 1 OF 1 REV B
PER EC # OU20-0261-01