# MHBS

## Boxed Metallized Polypropylene Film

| | |
|---|---|
| FEATURES | Small size - High voltage – High Capacitance |
| APPLICATIONS | UPS – DC link – AC/DC motor controls – Power inverters |

| | | | | | | | | | | |
|---|---|---|---|---|---|---|---|---|---|---|
| **Operating Temperature Range** | | | **-40°C to +100°C**<br>Above +85°C applied voltage must be de-rated by 1.5%/°C | | | | | | | |
| **Capacitance Tolerance** | | | ±10% at 1 kHz, 25°C<br>±5% optional | | | | | | | |
| **Surge Voltage** | **VDC** | **Code** | **A35** | **A40** | **A45** | **A50** | **A55** | **A60** | **A70** | |
| | | **85°C** | **575** | **700** | **800** | **900** | **1000** | **1100** | **1275** | |
| | | **70°C** | 630 | 770 | 880 | 1000 | 1100 | 1200 | 1400 | |
| | **Repetitive SVDC** | **85°C** | 660 | 805 | 920 | 1035 | 1150 | 1265 | 1465 | |
| | | **70°C** | 720 | 885 | 1010 | 1150 | 1265 | 1380 | 1610 | |
| | **Non-repetitive SVDC** | **85°C** | 750 | 910 | 1040 | 1170 | 1300 | 1430 | 1655 | |
| | | **70°C** | 815 | 1000 | 1140 | 1300 | 1430 | 1560 | 1820 | |
| | | | Repetitive SVDC: Maximum repetitive voltage for 1 hour Max/Day | | | | | | | |
| **AC Voltage** | **Code** | | **A35** | **A40** | **A45** | **A50** | **A55** | **A60** | **A70** | |
| | **VDC** | | **575** | **700** | **800** | **900** | **1000** | **1100** | **1275** | |
| | **VAC** | **85°C** | 240 | 285 | 315 | 350 | 400 | 420 | 440 | |
| | | **70°C** | 250 | 300 | 330 | 370 | 420 | 440 | 460 | |

| | | | | | | |
|---|---|---|---|---|---|---|
| **Dissipation Factor (MAX) Tan δ (%) at 1 kHz and 25°C** | **C≤ 4μF** | **4μF<C≤12μF** | **12μF<C≤20μF** | **20μF<C≤40μF** | **40μF<C≤75μF** | **C>75μF** |
| | .06 | .08 | .11 | .14 | .17 | .2 |

| | | | |
|---|---|---|---|
| **ESR (mΩ)** | **Lead spacing (mm)** | **Frequency range** | **ESR Value** |
| | 27.5 | 10kHz - 60kHz | See standard part listing |
| | 37.5 | 10kHz - 45 kHz | See standard part listing |
| | 52.5 | 10kHz - 30 kHz | See standard part listing |

| | | |
|---|---|---|
| **RMS Current** | No RMS current is to be applied at temperatures > +95°C | |
| **Ripple Current** | See standard part listing, No ripple current is to be applied when the ambient temperature is≥+95°C | |
| **Insulation Resistance** | 3000 MΩxuF (10000 MΩxuF typical)<br>"Not to exceed 3GΩ"<br>After 1 minute of 100VDC applied between the terminals at 25°C | |
| **Self Inductance** | <1 nano-Henry per mm of lead spacing and lead length | |
| **Long Term Stability** | Capacitance variation <1% MAX after 2 years | |
| **Dielectric Strength** | **Terminal to Terminal** | **Terminal to case** |
| | 150% of VDC or 150% of VAC applied for 10 Seconds and 25°C | 3KVAC at 50/60 Hz applied between the terminals and case for 60 Seconds and 25°C |


CDE ILLINOIS CAPACITOR a Cornell Dubilier Brand

North America
Tel: (847) 675-1760
sales@illcap.com

Asia
Tel: 852 2793 0931
sales@illcap.com.hk


©2019 Illinois Capacitor

# MHBS
## Boxed Metallized Polypropylene Film

| | | | |
|---|---|---|---|
| **Life Expectancy** | ≥60000 with VAC, ≥200000 With WVDC applied at +70°C<br>≥30000 with VAC, ≥100000 With WVDC applied at +85°C<br>≥10000 with 0.8xVAC, ≥30000 With 0.8xWVDC applied at +100°C | | |
| **Failure Quota** | 300/billion component hours | | |
| **Damp Heat Test** | **Test Condition** | **Performance requirements** | |
| | **Temperature= +40°C ±2°C** | **Max Capacitance change** | ≤ ±3%% of initially measured valued |
| | **Relative Humidity=93 ±2%** | **DF Change** | ≤ 200% of initially specified valued |
| | **Test length= 56 days** | **Insulation resistance** | ≥ 50% of minimum specified value |
| **Resistance to soldering Heat**<br>**Solder bath temperature: +260°C +/- 5°C**<br>**Exposure time: 10 seconds +/- 1 second** | **Max Capacitance change** | ≤1% of initially measured value | |
| | **DF Change** | ≤ .1% at 1kHz | |
| | **Insulation resistance** | ≥50% of minimum specified value | |
| **Construction** | Metallized Polypropylene film | | |
| **Electrodes** | Vacuum deposited Metal layers | | |
| **Coating** | Flame retardant Solvent resistant plastic case with epoxy end fill | | |
| **Lead Terminations** | Lead free tinned copper leads | | |


©2019 Illinois Capacitor
North America
Tel: (847) 675-1760
sales@illcap.com

Asia
Tel: 852 2793 0931
sales@illcap.com.hk

# MHBS

## Boxed Metallized Polypropylene Film

### Lead styles

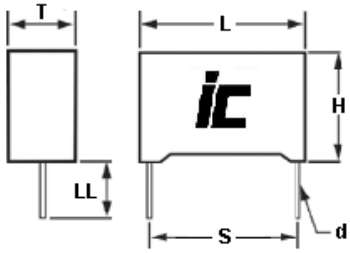


**2 leads**

| | | | | |
|---|---|---|---|---|
| **Length (L)** | 32 | 41.5 | 42.5 | 57.5 |
| **Lead spacing (S)** | 27.5 | 37.5 | 37.5 | 52.5 |
| **Lead Length (LL)** | 5mm +/-1 mm | | | |

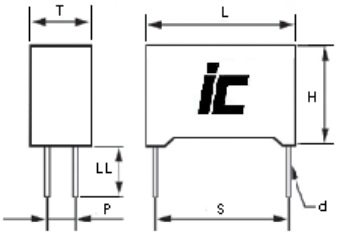


**4 leads**

| | | | | |
|---|---|---|---|---|
| **Length (L)** | 32 | 41.5 | 42.5 | 57.5 |
| **Lead spacing (S)** | 27.5 | 37.5 | 37.5 | 52.5 |
| **Lead Spacing (P)** | See part listing | | | |
| **Lead Length (LL)** | 5mm +/-1 mm | | | |

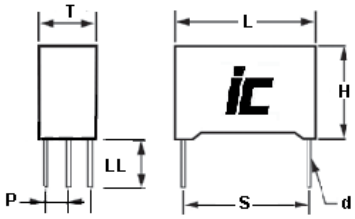


**6 leads**

| | | | | |
|---|---|---|---|---|
| **Length (L)** | 32 | 41.5 | 42.5 | 57.5 |
| **Lead spacing (S)** | 27.5 | 37.5 | 37.5 | 52.5 |
| **Lead Spacing (P)** | See part listing | | | |
| **Lead Length (LL)** | 5mm +/-1 mm | | | |

Dimensions in mm

©2019 Illinois Capacitor

North America
Tel: (847) 675-1760
sales@illcap.com

Asia
Tel: 852 2793 0931
sales@illcap.com.hk

# MHBS

## Boxed Metallized Polypropylene Film

### STYLE S, SM8, T ,TM8

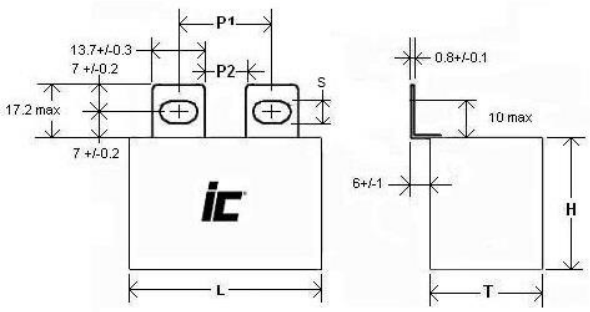


### STYLE L

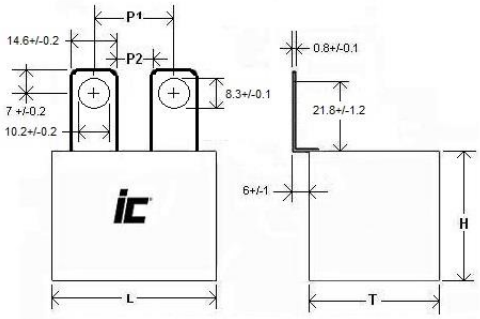


### STYLE E

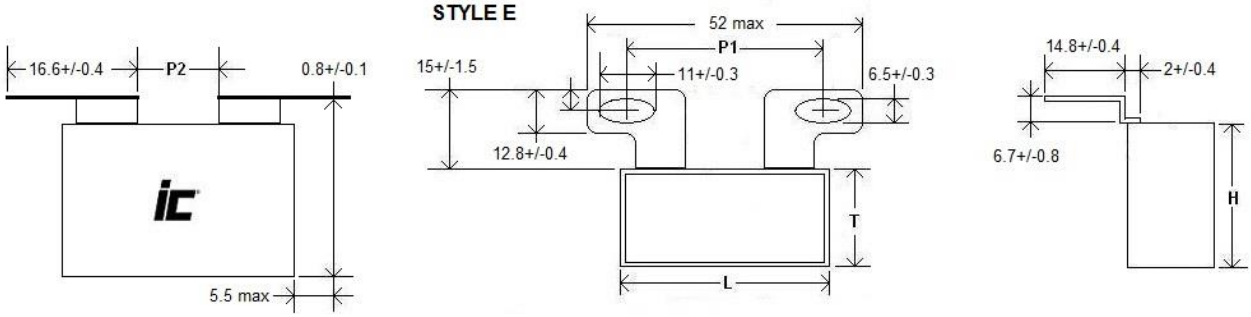


### Style B

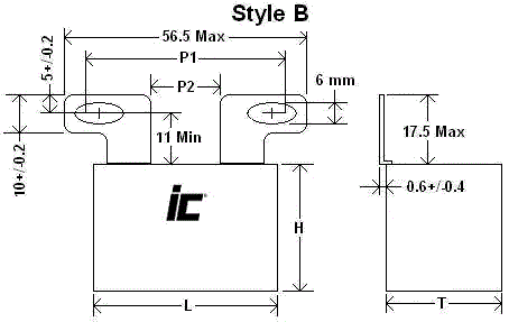


### STYLE F, FM8, G, GM8

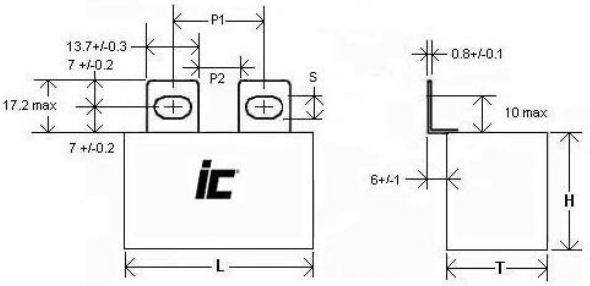


| Fixing pitch and distance between lugs (mm) | | | | |
|---|---|---|---|---|
| Lugs | L | P1 | P2 | S |
| S,V,F | 42 - 42.5 | 23 - 28 | 11 | 6 |
| | 57.5 | 37 - 42 | 24 | 6 |
| SM8,VM8, FM8 | 42 - 42.5 | 25 – 26 | 11 | 8 |
| | 57.5 | 39 - 40 | 24 | 8 |
| T,W,G | 42 - 42.5 | 20 – 25 | 8 | 6 |
| | 57.5 | 34 – 39 | 21 | 6 |
| TM8,WM8,GM8 | 42 - 42.5 | 22 – 23 | 8 | 8 |
| | 57.5 | 36 – 37 | 21 | 8 |
| N,P | 57.5 | 23 – 28 | 11 | 6 |
| NM8, PM8 | 57.5 | 25 - 26 | 11 | 8 |
| A | 42 - 42.5 | 51 – 64 | ---- | 8 |
| | 57.5 | 65 – 78 | --- | 8 |
| B | 42 - 42.5 | 32 – 45 | 17 | 6 |
| E | 42 - 42.5 | 30 - 37 | 15 | 6 |
| L | 42 - 42.5 | 22 - 24 | 8 | 6 |
| | 57.5 | 36 - 38 | 21 | 8 |

Dimensions in mm


CDE ILLINOIS CAPACITOR a Cornell Dubilier Brand

North America
Tel: (847) 675-1760
sales@illcap.com

Asia
Tel: 852 2793 0931
sales@illcap.com.hk


©2019 Illinois Capacitor

# MHBS

## Boxed Metallized Polypropylene Film

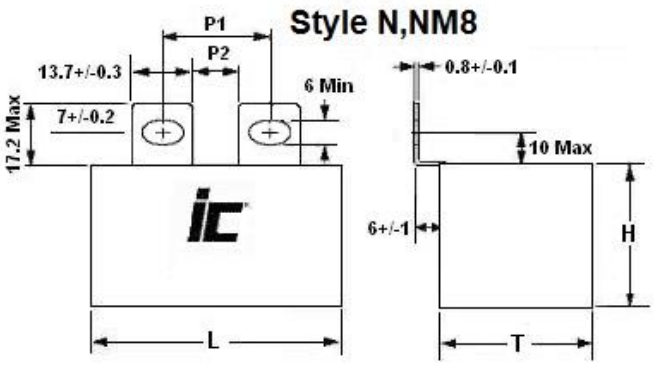


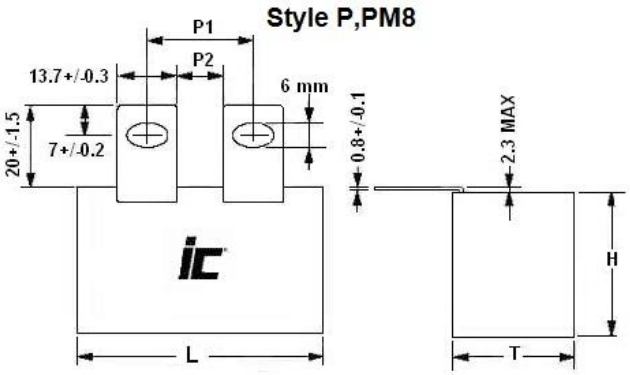


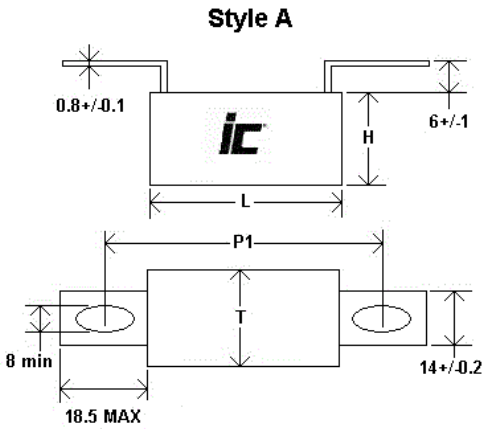


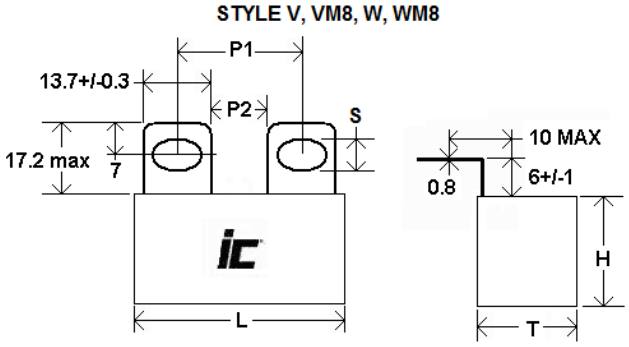


Dimensions in mm



©2019 Illinois Capacitor


North America
Tel: (847) 675-1760
sales@illcap.com

Asia
Tel: 852 2793 0931
sales@illcap.com.hk

# MHBS

**2,4,6, lug lead radial box**

| WVDC | Capacitance (µF) | IC PART NUMBER | dv/dt (V/µsec) | Maximum RMS Ripple Current (A) 100 kHz, +70°C | | | Typical ESR (mΩ) **, +25°C | Dimensions LxHxT (mm) | S (MM) | d (MM) | P (MM) | # Leads |
|---|---|---|---|---|---|---|---|---|---|---|---|---|
| | | | | +15°C | +10°C | +5°C | | | | | | |
| 575 | 3.3 | 335MHBS35K2H | 27 | 4.5 | 3.5 | 2.5 | 15 | 32x20x11 | 27.5 | 0.8 | | 2 |
| 575 | 4.7 | 475MHBS35K2H | 27 | 5.5 | 4.5 | 3.5 | 11.6 | 32x22x13 | 27.5 | 1 | | 2 |
| 575 | 5 | 505MHBS35K2H | 27 | 6 | 4.5 | 3.5 | 11 | 32x22x13 | 27.5 | 1 | | 2 |
| 575 | 6.8 | 685MHBS35K2H | 27 | 7 | 5.5 | 4 | 9.4 | 32x24.5x15 | 27.5 | 1 | | 2 |
| 575 | 7.5 | 755MHBS35K2H | 27 | 8 | 6.5 | 4.5 | 8.6 | 32x28x14 | 27.5 | 1.2 | | 2 |
| 575 | 10 | 106MHBS35K2H | 27 | 10 | 8 | 5.5 | 7 | 32x33x18 | 27.5 | 1.2 | | 2 |
| 575 | 12 | 126MHBS35KJ## | 19 | 11 | 8.5 | 6.5 | 6.6 | 42.5x28x17 | | | | lugs |
| 575 | 12 | 126MHBS35K2H | 27 | 11 | 8.5 | 6.5 | 6.1 | 32x33x18 | 27.5 | 1.2 | | 2 |
| 575 | 12 | 126MHBS35K2J | 19 | 9.5 | 7.5 | 5.5 | 7.4 | 42.5x28x17 | 37.5 | 1.2 | | 2 |
| 575 | 15 | 156MHBS35KJ## | 19 | 13 | 10 | 7.5 | 5.6 | 42.5x30x22 | | | | lugs |
| 575 | 15 | 156MHBS35K4H | 27 | 14.5 | 11.5 | 8.5 | 4.9 | 32x37x22 | 27.5 | 1.2 | 10.2 | 2 |
| 575 | 15 | 156MHBS35K2H | 27 | 13.5 | 10.5 | 7.5 | 5.6 | 32x37x22 | 27.5 | 1.2 | | 2 |
| 575 | 15 | 156MHBS35K2J | 19 | 11 | 8.5 | 6.5 | 6.4 | 42.5x30x22 | 37.5 | 1.2 | | 2 |
| 575 | 20 | 206MHBS35KJA## | 19 | 16.5 | 12.5 | 9.5 | 4.8 | 41.5x40x20 | | | | lugs |
| 575 | 20 | 206MHBS35K2JA | 19 | 13.5 | 11 | 8 | 5.6 | 41.5x40x20 | 37.5 | 1.2 | | 2 |
| 575 | 20 | 206MHBS35K4JA | 19 | 15 | 12 | 8.5 | 5 | 41.5x40x20 | 37.5 | 1.2 | 10.2 | 4 |
| 575 | 25 | 256MHBS35KJ## | 19 | 17 | 13.5 | 10 | 4.2 | 42.5x37x28 | | | | lugs |
| 575 | 25 | 256MHBS35K2J | 19 | 14 | 11.5 | 8.5 | 5 | 42.5x37x28 | 37.5 | 1.2 | | 2 |
| 575 | 25 | 256MHBS35K4J | 19 | 15.5 | 12.5 | 9 | 4.4 | 42.5x37x28 | 37.5 | 1.2 | 10.2 | 4 |
| 575 | 30 | 306MHBS35KJ## | 19 | 18.5 | 14.5 | 10.5 | 3.8 | 42.5x37x28 | | | | lugs |
| 575 | 30 | 306MHBS35K2J | 19 | 14 | 12 | 9 | 4.6 | 42.5x37x28 | 37.5 | 1.2 | | 2 |
| 575 | 30 | 306MHBS35K4J | 19 | 16.5 | 13 | 9.5 | 4 | 42.5x37x28 | 37.5 | 1.2 | 10.2 | 4 |
| 575 | 35 | 356MHBS35KJ## | 19 | 21 | 16.5 | 12.5 | 3.5 | 42.5x45x30 | | | | lugs |
| 575 | 35 | 356MHBS35K2J | 19 | 14 | 14 | 11 | 4.3 | 42.5x45x30 | 37.5 | 1.2 | | 2 |
| 575 | 35 | 356MHBS35K4J | 19 | 19 | 15.5 | 11 | 3.7 | 42.5x45x30 | 37.5 | 1.2 | 20.3 | 4 |
| 575 | 40 | 406MHBS35KJ## | 19 | 22 | 17.5 | 13 | 3.2 | 42.5x45x30 | | | | lugs |
| 575 | 40 | 406MHBS35K2J | 19 | 14 | 14 | 11 | 4 | 42.5x45x30 | 37.5 | 1.2 | | 2 |
| 575 | 40 | 406MHBS35K4J | 19 | 20 | 16 | 12 | 3.4 | 42.5x45x30 | 37.5 | 1.2 | 20.3 | 4 |
| 575 | 50 | 506MHBS35KR## | 12.5 | 21.5 | 17.5 | 12.5 | 3.8 | 57.5x45x30 | | | | lugs |
| 575 | 50 | 506MHBS35K2R | 12.5 | 14 | 14 | 10 | 4.6 | 57.5x45x30 | 52.5 | 1.2 | | 2 |
| 575 | 50 | 506MHBS35K4R | 12.5 | 19 | 15.5 | 11 | 4 | 57.5x45x30 | 52.5 | 1.2 | 20.3 | 4 |
| 575 | 60 | 606MHBS35KR## | 12.5 | 23 | 18.5 | 13.5 | 3.4 | 57.5x50x35 | | | | lugs |
| 575 | 60 | 606MHBS35K2R | 12.5 | 14 | 14 | 10.5 | 4.2 | 57.5x45x30 | 52.5 | 1.2 | | 2 |
| 575 | 60 | 606MHBS35K4R | 12.5 | 20.5 | 16.5 | 12 | 3.6 | 57.5x45x30 | 52.5 | 1.2 | 20.3 | 4 |
| 575 | 75 | 756MHBS35KR## | 12.5 | 25.5 | 20.5 | 15 | 3.1 | 57.5x50x35 | | | | lugs |
| 575 | 75 | 756MHBS35K2R | 12.5 | 14 | 14 | 12 | 3.9 | 57.5x50x35 | 52.5 | 1.2 | | 2 |
| 575 | 75 | 756MHBS35K4R | 12.5 | 23 | 18.5 | 13.5 | 3.3 | 57.5x50x35 | 52.5 | 1.2 | 20.3 | 4 |
| 575 | 90 | 906MHBS35K4R | 12.5 | 25 | 21 | 14.5 | 3.1 | 57.5x57.5x38 | 52.5 | 1.2 | 20.3 | 4 |
| 575 | 90 | 906MHBS35K6R | 12.5 | 26 | 23 | 16 | 2.9 | 57.5x57.5x38 | 52.5 | 1.2 | 10.2 | 6 |
| 575 | 100 | 107MHBS35K4R | 12.5 | 26 | 21.5 | 15 | 3 | 57.5x57.5x38 | 52.5 | 1.2 | 20.3 | 4 |
| 575 | 100 | 107MHBS35K6R | 12.5 | 27 | 22 | 15.5 | 2.8 | 57.5x57.5x38 | 52.5 | 1.2 | 10.2 | 6 |
| 700 | 2.5 | 255MHBS40K2H | 31 | 4.5 | 3.5 | 3 | 15.8 | 32x20x11 | 27.5 | 0.8 | | 2 |
| 700 | 2.5 | 255MHBS40K2H | 31 | 4.5 | 4 | 3 | 15.8 | 32x20x11 | 27.5 | 0.8 | | 2 |
| 700 | 3.3 | 335MHBS40K2H | 31 | 5.5 | 4.5 | 3.5 | 13.3 | 32x22x13 | 27.5 | 1 | | 2 |
| 700 | 4.7 | 475MHBS40K2H | 31 | 6.5 | 5.5 | 4 | 10.5 | 32x24.5x15 | 27.5 | 1 | | 2 |
| 700 | 5 | 505MHBS40K2H | 31 | 7 | 5.5 | 4 | 9.7 | 32x24.5x15 | 27.5 | 1.2 | | 2 |
| 700 | 7.5 | 755MHBS40K2J | 21 | 7.5 | 6 | 4.5 | 9.2 | 42.5x25x14 | 37.5 | 1.2 | | 2 |
| 700 | 12 | 126MHBS40KJ## | 21 | 13 | 10 | 7.5 | 5.6 | 42.5x30x22 | | | | lugs |
| 700 | 12 | 126MHBS40K2H | 31 | 13 | 10.5 | 7.5 | 5.8 | 32x37x22 | 27.5 | 1.2 | | 2 |
| 700 | 12 | 126MHBS40K4H | 31 | 14.5 | 11.5 | 8.5 | 5.2 | 32x37x22 | 27.5 | 1.2 | 10.2 | 4 |
| 700 | 12 | 126MHBS40K2J | 21 | 11 | 8.5 | 6.5 | 6.4 | 42.5x30x22 | 37.5 | 1.2 | | 2 |
| 700 | 15 | 156MHBS40KJ## | 21 | 14.5 | 11.5 | 8.5 | 4.7 | 42.5x33.5x22 | | | | lugs |
| 700 | 15 | 156MHBS40K2J | 21 | 12 | 9.5 | 7 | 5.5 | 42.5x33.5x22 | 37.5 | 1.2 | | 2 |
| 700 | 15 | 156MHBS40K4J | 21 | 13.5 | 10.5 | 7.5 | 4.9 | 42.5x33.5x22 | 37.5 | 1.2 | 5.1 | 4 |
| 700 | 20 | 206MHBS40KJ## | 21 | 17.5 | 14 | 10 | 4.1 | 42.5x37x28 | | | | lugs |
| 700 | 20 | 206MHBS40K2J | 21 | 14 | 11.5 | 8.5 | 4.9 | 42.5x37x28 | 37.5 | 1.2 | | 2 |
| 700 | 20 | 206MHBS40K4J | 21 | 18.5 | 14.5 | 10.5 | 4.1 | 42.5x37x28 | 37.5 | 1.2 | 10.2 | 4 |
| 700 | 22 | 226MHBS40KJ## | 21 | 19.5 | 15.5 | 11.5 | 3.8 | 42.5x37.5x28 | | | | 2 |

©2019 Illinois Capacitor

ILLINOIS CAPACITOR a Cornell Dubilier Brand

North America
Tel: (847) 675-1760
sales@illcap.com

Asia
Tel: 852 2793 0931
sales@illcap.com.hk

# MHBS

**2,4,6, lug lead radial box**

| WVDC | Capacitance (µF) | IC PART NUMBER | dv/dt (V/µsec) | Maximum RMS Ripple Current (A) 100 kHz, +70°C | | | Typical ESR (mΩ) **, +25°C | Dimensions LxHxT (mm) | S (MM) | d (MM) | P (MM) | # Leads |
|---|---|---|---|---|---|---|---|---|---|---|---|---|
| | | | | +15°C | +10°C | +5°C | | | | | | |
| 700 | 22 | 226MHBS40KJA## | 21 | 18.5 | 14.5 | 10.5 | 3.8 | 41.5x44x24 | | | | lugs |
| 700 | 22 | 226MHBS40K2J | 21 | 14 | 13 | 9.5 | 4.6 | 42.5x37x28 | 37.5 | 1.2 | | 2 |
| 700 | 22 | 226MHBS40K2JA | 21 | 14 | 12 | 9 | 4.6 | 41.5x44x24 | 37.5 | 1.2 | | 2 |
| 700 | 22 | 226MHBS40K4J | 21 | 17.5 | 14 | 10.5 | 4 | 42.5x37.5x28 | 37.5 | 1.2 | 10.2 | 4 |
| 700 | 22 | 226MHBS40K4JA | 21 | 16.5 | 13.5 | 10 | 4 | 41.5x44x24 | 37.5 | 1.2 | 10.2 | 4 |
| 700 | 25 | 256MHBS40KJA## | 21 | 21 | 16.5 | 12 | 3.5 | 41.5x44x24 | | | | lugs |
| 700 | 25 | 256MHBS40K2JA | 21 | 14 | 13.5 | 10 | 4.3 | 41.5x44x24 | 37.5 | 1.2 | | 2 |
| 700 | 25 | 256MHBS40K4JA | 21 | 19 | 15 | 11 | 3.7 | 41.5x44x24 | 37.5 | 1.2 | 10.2 | 4 |
| 700 | 30 | 306MHBS40KJ## | 21 | 22.5 | 17.5 | 13 | 3.2 | 42.5x45x30 | | | | lugs |
| 700 | 30 | 306MHBS40K2J | 21 | 14 | 14 | 11 | 4 | 42.5x45x30 | 37.5 | 1.2 | | 2 |
| 700 | 30 | 306MHBS40K4J | 21 | 20.5 | 16 | 12 | 3.4 | 42.5x45x30 | 37.5 | 1.2 | 20.3 | 4 |
| 700 | 40 | 406MHBS40KR## | 14.5 | 22 | 17.5 | 12.5 | 3.6 | 57.5x45x30 | | | | lugs |
| 700 | 40 | 406MHBS40K2R | 14.5 | 14 | 14 | 10.5 | 4.4 | 57.5x45x30 | 52.5 | 1.2 | | 2 |
| 700 | 40 | 406MHBS40K4R | 14.5 | 20 | 16 | 11.5 | 3.8 | 57.5x45x30 | 52.5 | 1.2 | 20.3 | 4 |
| 700 | 45 | 456MHBS40KR## | 14.5 | 23 | 18 | 13 | 3.4 | 57.5x45x30 | | | | lugs |
| 700 | 45 | 456MHBS40K2R | 14.5 | 14 | 14 | 11 | 4.2 | 57.5x45x30 | 52.5 | 1.2 | | 2 |
| 700 | 45 | 456MHBS40K4R | 14.5 | 21 | 16.5 | 12 | 3.6 | 57.5x45x30 | 52.5 | 1.2 | 20.3 | 4 |
| 700 | 50 | 506MHBS40KR## | 14.5 | 24.5 | 19.5 | 14.5 | 3.2 | 57.5x50x35 | | | | lugs |
| 700 | 50 | 506MHBS40K2R | 14.5 | 14 | 14 | 12 | 4 | 57.5x50x35 | 52.5 | 1.2 | | 2 |
| 700 | 50 | 506MHBS40K4R | 14.5 | 22.5 | 18 | 13 | 3.4 | 57.5x50x35 | 52.5 | 1.2 | 20.3 | 4 |
| 700 | 55 | 556MHBS40KR## | 14.5 | 25.5 | 20.5 | 15 | 3.1 | 57.5x50x35 | | | | lugs |
| 700 | 55 | 556MHBS40K2R | 14.5 | 14 | 14 | 12.5 | 3.9 | 57.5x50x35 | 52.5 | 1.2 | | 2 |
| 700 | 55 | 556MHBS40K4R | 14.5 | 23.5 | 19 | 13.5 | 3.3 | 57.5x50x35 | 52.5 | 1.2 | 20.3 | 4 |
| 700 | 60 | 606MHBS40KR## | 14.5 | 26.5 | 21 | 15.5 | 2.9 | 57.5x50x35 | | | | lugs |
| 700 | 60 | 606MHBS40K2R | 14.5 | 14 | 14 | 13 | 3.7 | 57.5x50x35 | 52.5 | 1.2 | | 2 |
| 700 | 60 | 606MHBS40K4R | 14.5 | 24.5 | 19.5 | 14 | 3.1 | 57.5x50x35 | 52.5 | 1.2 | 20.3 | 4 |
| 700 | 75 | 756MHBS40KR## | 14.5 | 28.5 | 24 | 17 | 2.7 | 57.5x57.5x38 | | | | lugs |
| 700 | 75 | 756MHBS40K4R | 14.5 | 26 | 21.5 | 15.5 | 2.9 | 57.5x57.5x38 | 52.5 | 1.2 | 20.3 | 4 |
| 700 | 75 | 756MHBS40K6R | 14.5 | 27 | 22.5 | 16 | 2.7 | 57.5x57.5x38 | 52.5 | 1.2 | 10.2 | 6 |
| 700 | 80 | 806MHBS40K4R | 14.5 | 26.5 | 22 | 15.5 | 2.8 | 57.5x57.5x38 | 52.5 | 1.2 | 20.3 | 4 |
| 700 | 80 | 806MHBS40K6R | 14.5 | 27.5 | 22 | 16.5 | 2.6 | 57.5x57.5x38 | 52.5 | 1.2 | 10.2 | 6 |
| 800 | 2.2 | 225MHBS45K2H | 36 | 4.5 | 4 | 3 | 15.3 | 32x20x11 | 27.5 | 0.8 | | 2 |
| 800 | 3 | 305MHBS45K2H | 36 | 5.5 | 4.5 | 3.5 | 12.4 | 32x22x13 | 27.5 | 1 | | 2 |
| 800 | 4 | 405MHBS45K2H | 36 | 6.5 | 5.5 | 4 | 10.8 | 32x24.5x15 | 27.5 | 1 | | 2 |
| 800 | 5 | 505MHBS45K2H | 36 | 7.5 | 6 | 4 | 10.5 | 32x28x14 | 27.5 | 1.2 | | 2 |
| 800 | 5 | 505MHBS45K2J | 24 | 7.5 | 6 | 4 | 10.3 | 42.5x25x14 | 37.5 | 1.2 | | 2 |
| 800 | 6.8 | 685MHBS45K2H | 36 | 9.5 | 7.5 | 5.5 | 7.6 | 32x33x18 | 27.5 | 1.2 | | 2 |
| 800 | 7.5 | 755MHBS45KJ## | 24 | 10.5 | 8.5 | 6 | 7.5 | 42.5x28x17 | | | | lugs |
| 800 | 7.5 | 755MHBS45K2H | 36 | 10.5 | 8.5 | 6 | 7.1 | 32x33x18 | 27.5 | 1.2 | | 2 |
| 800 | 7.5 | 755MHBS45K4H | 36 | 11.5 | 9 | 6.5 | 6.5 | 32x33x18 | 27.5 | 1.2 | 5.1 | 4 |
| 800 | 7.5 | 755MHBS45K2J | 24 | 9 | 7 | 5 | 8.3 | 42.5x28x17 | 37.5 | 1.2 | | 2 |
| 800 | 10 | 106MHBS45KJ## | 24 | 12.5 | 10 | 7.5 | 6.2 | 42.5x30x22 | | | | lugs |
| 800 | 10 | 106MHBS45K2H | 36 | 13 | 10.5 | 7.5 | 5.9 | 32x37x22 | 27.5 | 1.2 | | 2 |
| 800 | 10 | 106MHBS45K4H | 24 | 14.5 | 11.5 | 8.5 | 5.3 | 32x37x22 | 27.5 | 1.2 | 10.2 | 4 |
| 800 | 10 | 106MHBS45K2J | 24 | 10.5 | 8.5 | 6 | 7 | 42.5x30x22 | 37.5 | 1.2 | | 2 |
| 800 | 10 | 106MHBS45K4J | 24 | 11.5 | 9 | 6.5 | 6.4 | 42.5x30x22 | 37.5 | 1.2 | 5.1 | 4 |
| 800 | 12 | 126MHBS45KJ## | 24 | 13.5 | 11 | 8 | 5.6 | 42.5x33.5x22 | | | | lugs |
| 800 | 12 | 126MHBS45K2J | 24 | 11.5 | 9 | 7 | 6.4 | 42.5x33.5x22 | 37.5 | 1.2 | | 2 |
| 800 | 12 | 126MHBS45K4J | 24 | 12.5 | 10 | 7.5 | 5.8 | 42.5x33.5x22 | 37.5 | 1.2 | 5.1 | 4 |
| 800 | 15 | 156MHBS45K2JA | 24 | 13.5 | 11 | 8 | 5.6 | 41.5x40x20 | 37.5 | 1.2 | | 2 |
| 800 | 15 | 156MHBS45K4JA | 24 | 15 | 12 | 8.5 | 5 | 41.5x40x20 | 37.5 | 1.2 | 10.2 | 4 |
| 800 | 20 | 206MHBS45K2JA | 24 | 14 | 13 | 9.5 | 4.8 | 41.5x44x24 | 37.5 | 1.2 | | 2 |
| 800 | 20 | 206MHBS45K4JA | 24 | 18 | 14.5 | 10.5 | 4.2 | 41.5x44x24 | 37.5 | 1.2 | 10.2 | 4 |
| 800 | 22 | 226MHBS45KJ## | 24 | 20.5 | 16 | 12 | 3.8 | 42.5x45x30 | | | | lugs |
| 800 | 22 | 226MHBS45K2J | 24 | 14 | 13.5 | 10 | 4.6 | 42.5x45x30 | 37.5 | 1.2 | | 2 |
| 800 | 22 | 226MHBS45K4J | 24 | 18.5 | 14.5 | 10.5 | 4 | 42.5x45x30 | 37.5 | 1.2 | 20.3 | 4 |
| 800 | 25 | 256MHBS45KJ## | 24 | 22 | 17 | 12.5 | 3.5 | 42.5x45x30 | | | | lugs |
| 800 | 25 | 256MHBS45K2J | 24 | 14 | 14 | 10.5 | 4.3 | 42.5x45x30 | 37.5 | 1.2 | | 2 |

CDE ILLINOIS CAPACITOR a Cornell Dubilier Brand
©2019 Illinois Capacitor

North America
Tel: (847) 675-1760
sales@illcap.com

Asia
Tel: 852 2793 0931
sales@illcap.com.hk

# MHBS

**2,4,6, lug lead radial box**

| WVDC | Capacitance (µF) | IC PART NUMBER | dv/dt (V/µsec) | Maximum RMS Ripple Current (A) 100 kHz, +70°C | | | Typical ESR (mΩ) **, +25°C | Dimensions LxHxT (mm) | S (MM) | d (MM) | P (MM) | # Leads |
|---|---|---|---|---|---|---|---|---|---|---|---|---|
| | | | | +15°C | +10°C | +5°C | | | | | | |
| 800 | 25 | 256MHBS45K4J | 24 | 19.5 | 15.5 | 11.5 | 3.7 | 42.5x45x30 | 37.5 | 1.2 | 20.3 | 4 |
| 800 | 30 | 306MHBS45KR## | 16.5 | 21 | 16.5 | 12 | 4.1 | 57.5x45x30 | | | | lugs |
| 800 | 30 | 306MHBS45K2R | 16.5 | 14 | 14 | 10 | 4.7 | 57.5x45x30 | 52.5 | 1.2 | | 2 |
| 800 | 30 | 306MHBS45K4R | 16.5 | 21 | 16.5 | 12 | 4.1 | 57.5x45x30 | 52.5 | 1.2 | 20.3 | 4 |
| 800 | 35 | 356MHBS45KR## | 16.5 | 22 | 17.5 | 13 | 3.7 | 0x0x0 | | | | lugs |
| 800 | 35 | 356MHBS45K2R | 16.5 | 14 | 14 | 11 | 4.5 | 57.5x45x30 | 52.5 | 1.2 | | 2 |
| 800 | 35 | 356MHBS45K4R | 16.5 | 20 | 16 | 11.5 | 3.9 | 57.5x45x30 | 52.5 | 1.2 | 20.3 | 4 |
| 800 | 40 | 406MHBS45KR## | 16.5 | 23.5 | 19 | 14 | 3.4 | 57.5x50x35 | | | | lugs |
| 800 | 40 | 406MHBS45K2R | 16.5 | 14 | 14 | 11.5 | 4.2 | 57.5x50x35 | 52.5 | 1.2 | | 2 |
| 800 | 40 | 406MHBS45K4R | 16.5 | 21.5 | 17.5 | 12.5 | 3.6 | 57.5x50x35 | 52.5 | 1.2 | 20.3 | 4 |
| 800 | 45 | 456MHBS45KR## | 16.5 | 25.5 | 20 | 15 | 3.2 | 57.5x50x35 | | | | lugs |
| 800 | 45 | 456MHBS45K2R | 16.5 | 14 | 14 | 12 | 4 | 57.5x50x35 | 52.5 | 1.2 | | 2 |
| 800 | 45 | 456MHBS45K4R | 16.5 | 23 | 18.5 | 13.5 | 3.4 | 57.5x50x35 | 52.5 | 1.2 | 20.3 | 4 |
| 800 | 47 | 476MHBS45K2R | 16.5 | 14 | 14 | 12.5 | 3.9 | 57.5x50x35 | 52.5 | 1.2 | | 2 |
| 800 | 47 | 476MHBS45K4R | 16.5 | 23.5 | 19 | 13.5 | 3.3 | 57.5x50x35 | 52.5 | 1.2 | 20.3 | 4 |
| 800 | 60 | 606MHBS45KR## | 16.5 | 28.5 | 22.5 | 16.5 | 2.8 | 57.5x57.5x38 | | | | lugs |
| 800 | 60 | 606MHBS45K4R | 16.5 | 25.5 | 20.5 | 15.5 | 3 | 57.5x57.5x38 | 52.5 | 1.2 | 20.3 | 4 |
| 800 | 60 | 606MHBS45K6R | 16.5 | 26.5 | 21.5 | 15.5 | 2.8 | 57.5x57.5x38 | 52.5 | 1.2 | 10.2 | 6 |
| 800 | 65 | 656MHBS45K4R | 16.5 | 26.5 | 21 | 15.5 | 2.9 | 57.5x57.5x38 | 52.5 | 1.2 | 20.3 | 4 |
| 800 | 65 | 656MHBS45K6R | 16.5 | 27.5 | 22 | 16 | 2.7 | 57.5x57.5x38 | 52.5 | 1.2 | 10.2 | 6 |
| 900 | 2.2 | 225MHBS50K2H | 41.5 | 5 | 4 | 3 | 14.7 | 32x22x13 | 27.5 | 1 | | 2 |
| 900 | 2.5 | 255MHBS50K2H | 41.5 | 5.5 | 4.5 | 3 | 13.5 | 32x22x13 | 27.5 | 1 | | 2 |
| 900 | 3 | 305MHBS50K2H | 41.5 | 6.5 | 5 | 3.5 | 11.9 | 32x24.5x15 | 27.5 | 1 | | 2 |
| 900 | 3.3 | 335MHBS50K2H | 41.5 | 7 | 5.5 | 4 | 11 | 32x28x14 | 27.5 | 1.2 | | 2 |
| 900 | 4.7 | 475MHBS50K2J | 28 | 7 | 5.5 | 4 | 10.6 | 42.5x25x14 | 27.5 | 1.2 | | 2 |
| 900 | 6 | 605MHBS50KJ## | 28 | 10.5 | 8.5 | 6 | 8.4 | 42.5x28x17 | | | | lugs |
| 900 | 6 | 605MHBS50K2H | 41.5 | 9.5 | 7.5 | 5.5 | 7.6 | 32x33x18 | 27.5 | 1.2 | | 2 |
| 900 | 6 | 605MHBS50K4H | 41.5 | 10.5 | 8.5 | 6 | 7 | 32x33x18 | 27.5 | 1.2 | 5.1 | 2 |
| 900 | 6 | 605MHBS50K2J | 42.5 | 9 | 7 | 5 | 9.2 | 42.5x18x17 | 37.5 | 1.2 | | 4 |
| 900 | 7.5 | 755MHBS50KH## | 28 | 12 | 9.5 | 7 | 7.2 | 42.5x30x22 | | | | lugs |
| 900 | 7.5 | 755MHBS50K2H | 41.5 | 12.5 | 9.5 | 7 | 6.9 | 32x37x22 | 27.5 | 1.2 | | 2 |
| 900 | 7.5 | 755MHBS50K4H | 41.5 | 13.5 | 10.5 | 8 | 6.3 | 32x37x22 | 27.5 | 1.2 | 10.2 | 4 |
| 900 | 7.5 | 755MHBS50K2J | 28 | 10 | 8 | 5.5 | 8 | 42.5x30x22 | 37.5 | 1.2 | | 2 |
| 900 | 10 | 106MHBS50KJ## | 28 | 13.5 | 10.5 | 8 | 6 | 42.5x33.5x22 | | | | lugs |
| 900 | 10 | 106MHBS50K2J | 28 | 11.5 | 9 | 6.5 | 6.8 | 42.5x33.5x22 | 37.5 | 1.2 | | 2 |
| 900 | 10 | 106MHBS50K4J | 28 | 12.5 | 9.5 | 7 | 6.2 | 42.5x33.5x22 | 37.5 | 1.2 | 5.1 | 4 |
| 900 | 12 | 126MHBS50KJA## | 28 | 15.5 | 12.5 | 9 | 5.5 | 41.5x40x20 | | | | lugs |
| 900 | 12 | 126MHBS50K2JA | 28 | 13.5 | 11 | 7.5 | 6.3 | 41.5x40x20 | 37.5 | 1.2 | | 2 |
| 900 | 12 | 126MHBS50K4JA | 28 | 14.5 | 11.5 | 8 | 5.7 | 41.5x40x20 | 37.5 | 1.2 | 10.2 | 4 |
| 900 | 15 | 156MHBS50KJ## | 28 | 17 | 14 | 10.5 | 4.5 | 42.5x37x28 | | | | lugs |
| 900 | 15 | 156MHBS50KJA## | 28 | 18.5 | 15 | 11.5 | 4.5 | 41.5x44x24 | | | | lugs |
| 900 | 15 | 156MHBS50KJ## | 28 | 17.5 | 14 | 10.5 | 4.5 | 42.5x37x28 | | | | lugs |
| 900 | 15 | 156MHBS50K2JA | 28 | 14 | 12.5 | 9.5 | 5.3 | 41.5x44x24 | 37.5 | 1.2 | | 2 |
| 900 | 15 | 156MHBS50K2J | 28 | 14 | 11.5 | 8 | 5.3 | 42.5x37x28 | 37.5 | 1.2 | | 2 |
| 900 | 15 | 156MHBS50K2JA | 28 | 14 | 12.5 | 9.5 | 5.3 | 41.5x44x24 | 37.5 | 1.2 | | 2 |
| 900 | 15 | 156MHBS50K4J | 28 | 15.5 | 12.5 | 9 | 4.7 | 42.5x37x28 | 37.5 | 1.2 | 10.2 | 4 |
| 900 | 15 | 156MHBS50K4JA | 28 | 17 | 14 | 10.5 | 4.7 | 41.5x44x24 | 37.5 | 1.2 | 10.2 | 4 |
| 900 | 20 | 206MHBS50K2J | 28 | 14 | 14 | 10.5 | 4.5 | 42.5x45x30 | 37.5 | 1.2 | | 2 |
| 900 | 20 | 206MHBS50K4J | 28 | 19 | 15 | 11 | 3.9 | 42.5x45x30 | 37.5 | 1.2 | 20.3 | 4 |
| 900 | 20 | 206MHBS50KJ## | 28 | 21 | 16.5 | 12 | 3.7 | 42.5x45x30 | 37.5 | | | lugs |
| 900 | 25 | 256MHBS50KR## | 18.5 | 19.5 | 16 | 11.5 | 4.5 | 57.5x45x30 | | | | lugs |
| 900 | 25 | 256MHBS50K2R | 18.5 | 14 | 13 | 10 | 5.3 | 57.5x45x30 | 52.5 | 1.2 | | 2 |
| 900 | 25 | 256MHBS50K4R | 18.5 | 18 | 15 | 11 | 4.7 | 57.5x45x30 | 52.5 | 1.2 | 20.3 | 4 |
| 900 | 35 | 356MHBS50KR## | 18.5 | 24 | 19 | 14 | 3.4 | 57.5x50x35 | | | | lugs |
| 900 | 35 | 356MHBS50K2R | 18.5 | 14 | 14 | 12 | 4.2 | 57.5x50x35 | 52.5 | 1.2 | | 2 |
| 900 | 35 | 356MHBS50K4R | 18.5 | 22 | 17.5 | 13 | 3.6 | 57.5x50x35 | 52.5 | 1.2 | 20.3 | 4 |
| 900 | 40 | 406MHBS50KR2 | 18.5 | 14 | 14 | 13 | 3.9 | 57.5x50x30 | 52.5 | 1.2 | | 2 |
| 900 | 40 | 406MHBS50K4R | 18.5 | 23.5 | 19 | 13.5 | 3.3 | 57.5x50x30 | 52.5 | 1.2 | 20.3 | 4 |

©2019 Illinois Capacitor

ILLINOIS CAPACITOR a Cornell Dubilier Brand

North America
Tel: (847) 675-1760
sales@illcap.com

Asia
Tel: 852 2793 0931
sales@illcap.com.hk

# MHBS

**2,4,6, lug lead radial box**

| WVDC | Capacitance (µF) | IC PART NUMBER | dv/dt (V/µsec) | Maximum RMS Ripple Current (A) 100 kHz, +70°C | | | Typical ESR (mΩ) **, +25°C | Dimensions LxHxT (mm) | S (MM) | d (MM) | P (MM) | # Leads |
|---|---|---|---|---|---|---|---|---|---|---|---|---|
| | | | | +15°C | +10°C | +5°C | | | | | | |
| 900 | 47 | 476MHBS50KR## | 18.5 | 28.5 | 23 | 16.5 | 2.8 | 57.5x57.5x38 | | | | lugs |
| 900 | 47 | 476MHBS50K4R | 18.5 | 25.5 | 20.5 | 15 | 3 | 57.5x57.5x38 | 52.5 | 1.2 | 20.3 | 4 |
| 900 | 47 | 476MHBS50K6R | 18.5 | 26.5 | 21.5 | 15.5 | 2.8 | 57.5x57.5x38 | 52.5 | 1.2 | 10.2 | 6 |
| 900 | 50 | 506MHBS50K4R | 18.5 | 26 | 21 | 15 | 3 | 57.5x57.5x38 | 52.5 | 1.2 | 20.3 | 4 |
| 900 | 50 | 506MHBS50K6R | 18.5 | 27 | 22 | 16 | 2.8 | 57.5x57.5x38 | 52.5 | 1.2 | 10.2 | lugs |
| 1000 | 1.5 | 155MHBS55K2H | 47 | 4.5 | 3.5 | 2.5 | 17.8 | 32x20x11 | 27.5 | 0.8 | | 2 |
| 1000 | 2 | 205MHBS55K2H | 47 | 5.5 | 4 | 3 | 14.5 | 32x22x13 | 27.5 | 1 | | 2 |
| 1000 | 2.5 | 255MHBS55K2H | 47 | 6 | 5 | 3.5 | 12.8 | 32x24.5x15 | 27.5 | 1 | | 2 |
| 1000 | 2.5 | 255MHBS55K2H | 47 | 6 | 5 | 3.5 | 12.8 | 32x28x15 | 27.5 | 1.2 | | 2 |
| 1000 | 3 | 305MHBS55K2H | 47 | 7.5 | 6 | 4 | 11 | 32x28x14 | 27.5 | 1.2 | | 2 |
| 1000 | 4 | 405MHBS55K2J | 31 | 7 | 5.5 | 4 | 11 | 42.5x25x14 | 37.5 | 1.2 | | 2 |
| 1000 | 4.7 | 475MHBS55KJ## | 31 | 9.5 | 7.5 | 5.5 | 8.7 | 42.5x28x17 | | | | lugs |
| 1000 | 4.7 | 475MHBS55K2H | 47 | 9.5 | 7.5 | 5.5 | 8.3 | 32x33x18 | 27.5 | 1.2 | | 2 |
| 1000 | 4.7 | 475MHBS55K4H | 47 | 10.5 | 8.5 | 6 | 7.7 | 32x33x18 | 27.5 | 1.2 | 10.2 | 4 |
| 1000 | 4.7 | 475MHBS55K2J | 31 | 8.5 | 6.5 | 4.5 | 9.6 | 42.5x28x17 | 37.5 | 1.2 | | 2 |
| 1000 | 4.7 | 475MHBS55K2J | 31 | 8.5 | 6.5 | 4.5 | 9.6 | 42.5x28x17 | 37.5 | 1.2 | | 2 |
| 1000 | 5 | 505MHBS55KJ## | 31 | 10.5 | 8.5 | 6 | 8.5 | 42.5x28x17 | | | | lugs |
| 1000 | 5 | 505MHBS55K2H | 47 | 10 | 7.5 | 5.5 | 8 | 32x33x18 | 27.5 | 1.2 | | 2 |
| 1000 | 5 | 505MHBS55K4H | 47 | 11 | 9 | 6.5 | 7.4 | 32x33x18 | 27.5 | 1.2 | 10.2 | 4 |
| 1000 | 5 | 505MHBS55K2J | 31 | 9.5 | 7.5 | 5.5 | 9.3 | 42.5x28x17 | 37.5 | 1.2 | | 2 |
| 1000 | 6.8 | 685MHBS55KJ## | 31 | 11.5 | 9 | 7 | 7.1 | 42.5x30x22 | | | | lugs |
| 1000 | 6.8 | 685MHBS55K2H | 47 | 12 | 10 | 7.5 | 6.9 | 32x37x22 | 27.5 | 1.2 | | 2 |
| 1000 | 6.8 | 685MHBS55K4H | 47 | 13.5 | 11 | 8 | 6.3 | 32x37x22 | 27.5 | 1.2 | 10.2 | 4 |
| 1000 | 6.8 | 685MHBS55K2J | 31 | 10 | 8 | 6 | 7.9 | 42.5x30x22 | 37.5 | 1.2 | | 2 |
| 1000 | 7.5 | 755MHBS55KJ## | 31 | 13 | 10.5 | 7.5 | 6.6 | 42.5x33.5x22 | | | | lugs |
| 1000 | 7.5 | 755MHBS55K2J | 31 | 11 | 8.5 | 6.5 | 7.4 | 42.5x33.5x22 | 37.5 | 1.2 | | 2 |
| 1000 | 7.5 | 755MHBS55K4J | 31 | 12 | 9.5 | 7 | 6.8 | 42.5x33.5x22 | 37.5 | 1.2 | 5.1 | 4 |
| 1000 | 9 | 905MHBS55KJA## | 31 | 15.5 | 12 | 8.5 | 5.8 | 41.5x40x20 | | | | lugs |
| 1000 | 9 | 905MHBS55K2JA | 31 | 13 | 10 | 7.5 | 6.6 | 41.5x40x20 | 37.5 | 1.2 | | 2 |
| 1000 | 9 | 905MHBS55K4JA | 31 | 14.5 | 11 | 8 | 6 | 41.5x40x20 | 37.5 | 1.2 | 10.2 | 4 |
| 1000 | 10 | 106MHBS55K2JA | 31 | 13.5 | 10.5 | 8 | 6.3 | 41.5x40x20 | 37.5 | 1.2 | | 2 |
| 1000 | 10 | 106MHBS55K4JA | 31 | 15 | 11.5 | 8.5 | 5.7 | 41.5x40x20 | 37.5 | 1.2 | 10.2 | 4 |
| 1000 | 12 | 126MHBS55KJA## | 31 | 16.5 | 13.5 | 10 | 4.9 | 41.5x44x24 | | | | lugs |
| 1000 | 12 | 126MHBS55KJ## | 31 | 18 | 14 | 10.5 | 4.9 | 42.5x37x28 | | | | lugs |
| 1000 | 12 | 126MHBS55K2JA | 31 | 14 | 12 | 9 | 5.7 | 41.5x44x24 | 37.5 | 1.2 | | 2 |
| 1000 | 12 | 126MHBS55K2J | 31 | 14 | 12 | 9 | 5.7 | 42.5x37x28 | 37.5 | 1.2 | | 2 |
| 1000 | 12 | 126MHBS55K4JA | 31 | 16.5 | 13.5 | 9.5 | 5.1 | 41.5x44x24 | 37.5 | 1.2 | 10.2 | 4 |
| 1000 | 12 | 126MHBS55K4J | 31 | 16.5 | 13.5 | 9.5 | 5.1 | 42.5x37x28 | 37.5 | 1.2 | 10.2 | 4 |
| 1000 | 15 | 156MHBS55KJ## | 31 | 20 | 16 | 12 | 4.2 | 42.5x45x30 | | | | lugs |
| 1000 | 15 | 156MHBS55K2J | 31 | 14 | 13.5 | 10 | 5 | 42.5x45x30 | 37.5 | 1.2 | | 2 |
| 1000 | 15 | 156MHBS55K4J | 31 | 18 | 14.5 | 11 | 4.4 | 42.5x45x30 | 37.5 | 1.2 | 20.3 | 4 |
| 1000 | 22 | 226MHBS55KR## | 21 | 20.5 | 16.5 | 12 | 4.3 | 57.5x45x30 | | | | lugs |
| 1000 | 22 | 226MHBS55K2R | 21 | 14 | 13.5 | 10 | 5.1 | 57.5x45x30 | 52.5 | 1.2 | | 2 |
| 1000 | 22 | 226MHBS55K4R | 21 | 18.5 | 15 | 11 | 4.5 | 57.5x45x30 | 52.5 | 1.2 | 20.3 | 4 |
| 1000 | 30 | 306MHBS55KR## | 21 | 24 | 19 | 13.5 | 3.6 | 57.5x50x35 | | | | lugs |
| 1000 | 30 | 306MHBS55K2R | 21 | 14 | 14 | 11.5 | 4.3 | 57.5x50x35 | 52.5 | 1.2 | | 2 |
| 1000 | 30 | 306MHBS55K4R | 21 | 22 | 17.5 | 12.5 | 3.8 | 57.5x50x35 | 52.5 | 1.2 | 20.3 | 4 |
| 1000 | 33 | 336MHBS55K2R | 21 | 14 | 14 | 12 | 4.1 | 57.5x50x35 | 52.5 | 1.2 | | 2 |
| 1000 | 33 | 336MHBS55K4R | 21 | 23 | 18.5 | 13 | 3.5 | 57.5x50x35 | 52.5 | 1.2 | 20.3 | 4 |
| 1000 | 40 | 406MHBS55KR## | 21 | 27.5 | 22 | 16.5 | 3 | 57.5x57.5x38 | | | | lugs |
| 1000 | 40 | 406MHBS55K4R | 21 | 25 | 20 | 14.5 | 3.2 | 57.5x57.5x38 | 52.5 | 1.2 | 20.3 | 4 |
| 1000 | 40 | 406MHBS55K6R | 21 | 26 | 15 | 3 | 3 | 57.5x57.5x38 | 52.5 | 1.2 | 10.2 | 6 |
| 1100 | 1.2 | 125MHBS60K2H | 50 | 4.5 | 3.5 | 2.5 | 18 | 32x20x11 | 27.5 | 0.8 | | 2 |
| 1100 | 1.5 | 155MHBS60K2H | 50 | 5 | 4 | 3 | 15.5 | 32x22x13 | 27.5 | 1 | | 2 |
| 1100 | 2 | 205MHBS60K2H | 50 | 6 | 5 | 3.5 | 12.9 | 32x24.5x15 | 27.5 | 1 | | 2 |
| 1100 | 2.2 | 225MHBS60K2H | 50 | 6 | 5 | 3.5 | 12.2 | 32x24.5x15 | 27.5 | 1 | | 2 |
| 1100 | 2.5 | 255MHBS60K2H | 50 | 7 | 5.5 | 4 | 10.8 | 32x28x14 | 27.5 | 1.2 | | 2 |
| 1100 | 3 | 305MHBS60K2J | 34 | 6.5 | 5 | 4 | 11.8 | 42x25x14 | 37.5 | 1.2 | | 2 |

CDE ILLINOIS CAPACITOR a Cornell Dubilier Brand
©2019 Illinois Capacitor

North America
Tel: (847) 675-1760
sales@illcap.com

Asia
Tel: 852 2793 0931
sales@illcap.com.hk

# MHBS

**2,4,6, lug lead radial box**

| WVDC | Capacitance (µF) | IC PART NUMBER | dv/dt (V/µsec) | Maximum RMS Ripple Current (A) 100 kHz, +70°C | | | Typical ESR (mΩ) **, +25°C | Dimensions LxHxT (mm) | S (MM) | d (MM) | P (MM) | # Leads |
|---|---|---|---|---|---|---|---|---|---|---|---|---|
| | | | | +15°C | +10°C | +5°C | | | | | | |
| 1100 | 3.3 | 335MHBS60K2H | 50 | 9 | 7 | 5 | 9.2 | 32x33x18 | 27.5 | 1.2 | | 2 |
| 1100 | 4 | 405MHBS60KJ## | 34 | 9.5 | 7.5 | 5.5 | 9.1 | 42.5x28x17 | | | | lugs |
| 1100 | 4 | 405MHBS60K2H | 50 | 9.5 | 7.5 | 5.5 | 8.1 | 32x33x18 | 27.5 | 1.2 | | 2 |
| 1100 | 4 | 405MHBS60K4H | 50 | 10.5 | 8.5 | 6 | 7.5 | 32x33x18 | 27.5 | 1.2 | 5.1 | 4 |
| 1100 | 4 | 405MHBS60K2J | 34 | 8.5 | 6.5 | 4.5 | 9.9 | 42.5x28x17 | 37.5 | 1.2 | | 2 |
| 1100 | 4.7 | 475MHBS60KJ## | 34 | 11.5 | 8.5 | 6.5 | 7.5 | 42.5x30x22 | | | | lugs |
| 1100 | 4.7 | 475MHBS60K2H | 50 | 11.5 | 9 | 7 | 7.4 | 32x37x22 | 27.5 | 1.2 | | 2 |
| 1100 | 4.7 | 475MHBS60K4H | 50 | 12.5 | 10 | 7.5 | 6.8 | 32x37x22 | 27.5 | 1.2 | 10.2 | 4 |
| 1100 | 4.7 | 475MHBS60K2J | 34 | 10 | 7.5 | 5.5 | 8.3 | 42.5x30x22 | 37.5 | 1.2 | | 2 |
| 1100 | 5 | 505MHBS60KJ## | 34 | 12 | 9 | 6.5 | 7.3 | 42.5x30x22 | | | | lugs |
| 1100 | 5 | 505MHBS60K2H | 50 | 12 | 9.5 | 7 | 7.2 | 32x37x22 | 27.5 | 1.2 | | 2 |
| 1100 | 5 | 505MHBS60K4H | 50 | 13 | 10.5 | 7.5 | 6.6 | 32x37x22 | 27.5 | 1.2 | 10.2 | 4 |
| 1100 | 5 | 505MHBS60K2J | 34 | 10.5 | 8 | 5.5 | 8.1 | 42.5x30x22 | 37.5 | 1.2 | | 2 |
| 1100 | 6.8 | 685MHBS60KJ## | 34 | 13 | 10.5 | 7.5 | 6.1 | 42.5x33.5x22 | | | | lugs |
| 1100 | 6.8 | 685MHBS60K2J | 34 | 11 | 9 | 6.5 | 6.9 | 42.5x33.5x22 | 37.5 | 1.2 | | 2 |
| 1100 | 6.8 | 685MHBS60K4J | 34 | 12 | 9.5 | 7 | 6.3 | 42.5x33.5x22 | 37.5 | 1.2 | 5.1 | 4 |
| 1100 | 7.5 | 755MHBS70KJ## | 41 | 17.5 | 13.5 | 10 | 5.3 | 42.5x37x28 | | | | lugs |
| 1100 | 7.5 | 755MHBS60KJA## | 34 | 14 | 11.5 | 8.5 | 5.8 | 41.5x40x20 | | | | lugs |
| 1100 | 7.5 | 755MHBS70K2J | 41 | 14 | 11.5 | 8.5 | 6.1 | 42.5x37x28 | 37.5 | 1.2 | | 2 |
| 1100 | 7.5 | 755MHBS60K2J | 34 | 11.5 | 9.5 | 6.5 | 6.6 | 42.5x33.5x22 | 37.5 | 1.2 | | 2 |
| 1100 | 7.5 | 755MHBS60K4J | 34 | 12.5 | 10.5 | 7.5 | 6 | 42.5x33.5x22 | 37.5 | 1.2 | 10.2 | 4 |
| 1100 | 7.5 | 755MHBS70K4J | 41 | 16 | 12.5 | 9 | 5.5 | 42.5x37x28 | 37.5 | 1.2 | 10.2 | 4 |
| 1100 | 10 | 106MHBS60KJ## | 34 | 18.5 | 14.5 | 10.5 | 4.7 | 42.5x37x28 | | | | lugs |
| 1100 | 10 | 106MHBS60KJA## | 34 | 18.5 | 14.5 | 10.5 | 4.7 | 41.5x44x24 | | | | lugs |
| 1100 | 10 | 106MHBS60K2J | 34 | 14 | 12.5 | 9 | 5.5 | 42.5x37x28 | 37.5 | 1.2 | | 2 |
| 1100 | 10 | 106MHBS60K2JA | 34 | 14 | 12.5 | 9 | 5.5 | 41.5x44x24 | 37.5 | 1.2 | | 2 |
| 1100 | 10 | 106MHBS60K4JA | 34 | 17 | 13.5 | 10 | 4.9 | 41.5x44x24 | 37.5 | 1.2 | 10.2 | 4 |
| 1100 | 10 | 106MHBS60K4J | 34 | 17 | 13.5 | 10 | 4.9 | 42.5x37x28 | 37.5 | 1.2 | 10.2 | 4 |
| 1100 | 12 | 126MHBS60KJ## | 34 | 20 | 15.5 | 11.5 | 4.2 | 42.5x45x30 | | | | lugs |
| 1100 | 12 | 126MHBS60K2J | 34 | 14 | 13.5 | 10 | 5 | 42.5x45x30 | 37.5 | 1.2 | | 2 |
| 1100 | 12 | 126MHBS60K4J | 34 | 18.5 | 14.5 | 10.5 | 4.4 | 42.5x45x30 | 37.5 | 1.2 | 20.3 | 4 |
| 1100 | 20 | 206MHBS60KR## | 23 | 21 | 17 | 12.5 | 4 | 57.5x45x30 | | | | lugs |
| 1100 | 20 | 206MHBS60K2R | 23 | 14 | 13.5 | 10 | 4.8 | 57.5x45x30 | 52.5 | 1.2 | | 2 |
| 1100 | 20 | 206MHBS60K4R | 23 | 19 | 15 | 11 | 4.2 | 57.5x45x30 | 52.5 | 1.2 | 20.3 | 4 |
| 1100 | 22 | 226MHBS60KR## | 23 | 23 | 18.5 | 13 | 3.8 | 57.5x50x35 | | | | lugs |
| 1100 | 22 | 226MHBS60K2R | 23 | 14 | 14 | 11 | 4.6 | 57.5x50x35 | 52.5 | 1.2 | | 2 |
| 1100 | 22 | 226MHBS60K4R | 23 | 21 | 17 | 12 | 4 | 57.5x50x35 | 52.5 | 1.2 | 20.3 | 4 |
| 1100 | 25 | 256MHBS70KR## | 28 | 26 | 21 | 15 | 3.4 | 0x0x0 | | | | lugs |
| 1100 | 25 | 256MHBS60K2R | 23 | 14 | 14 | 12 | 4.4 | 57.5x50x35 | 52.5 | 1.2 | | 2 |
| 1100 | 25 | 256MHBS60K4R | 23 | 22 | 17.5 | 12.5 | 3.8 | 57.5x50x35 | 52.5 | 1.2 | 20.3 | 4 |
| 1100 | 25 | 256MHBS70K4R | 28 | 23 | 19 | 13.5 | 3.6 | 57.5x57.5x38 | 52.5 | 1.2 | 20.3 | 4 |
| 1100 | 25 | 256MHBS70K6R | 28 | 24 | 19.5 | 14 | 3.4 | 57.5x57.5x38 | 52.5 | 1.2 | 10.2 | 6 |
| 1100 | 25 | 256MHBS60KR## | 23 | 24 | 19.5 | 14 | 3.6 | 57.5x50x35 | 52.5 | | | lugs |
| 1100 | 33 | 336MHBS60KR## | 23 | 25.5 | 20.5 | 15 | 3.1 | 57.5x57.5x38 | | | | lugs |
| 1100 | 33 | 336MHBS60K4R | 23 | 24.5 | 19.5 | 14.5 | 3.3 | 57.5x57.5x38 | 52.5 | 1.2 | 20.3 | 4 |
| 1100 | 35 | 356MHBS60K4R | 23 | 25 | 20 | 14.5 | 3.2 | 57.5x57.5x38 | 52.5 | 1.2 | 20.3 | 4 |
| 1100 | 35 | 356MHBS60K6R | 23 | 26 | 20.5 | 15 | 3 | 57.5x57.5x38 | 52.5 | 1.2 | 10.2 | 6 |
| 1275 | 0.68 | 684MHBS70K2H | 61 | 4 | 3 | 2.5 | 23 | 32x20x11 | 27.5 | 0.8 | | 2 |
| 1275 | 1 | 105MHBS70K2H | 61 | 5 | 4 | 3 | 17.8 | 32x22x13 | 27.5 | 1 | | 2 |
| 1275 | 1.5 | 155MHBS70K2H | 61 | 6 | 4.5 | 3.5 | 14 | 32x24.5x15 | 27.5 | 1 | | 2 |
| 1275 | 2 | 205MHBS70K2H | 61 | 8 | 6.5 | 4.5 | 11.5 | 32x33x18 | 27.5 | 1.2 | | 2 |
| 1275 | 2.2 | 225MHBS70K2H | 61 | 8.5 | 6.5 | 4.5 | 10.8 | 32x33x18 | 27.5 | 1.2 | | 2 |
| 1275 | 2.2 | 225MHBS70K2J | 41 | 6.5 | 5 | 4 | 12.5 | 42.5x25x14 | 37.5 | 1.2 | | 2 |
| 1275 | 2.5 | 255MHBS70K2H | 61 | 9 | 7 | 5 | 9.7 | 32x33x18 | 27.5 | 1.2 | | 2 |
| 1275 | 3 | 305MHBS70KJ## | 41 | 9.5 | 7.5 | 5.5 | 9.3 | 42.5x28x17 | | | | lugs |
| 1275 | 3 | 305MHBS70K2H | 61 | 9.5 | 7.5 | 5.5 | 8.6 | 32x33x18 | 27.5 | 1.2 | | 2 |
| 1275 | 3 | 305MHBS70K2J | 41 | 8 | 6.5 | 5 | 10.1 | 42.5x28x17 | 37.5 | 1.2 | | 2 |
| 1275 | 3.3 | 335MHBS70KJ## | 41 | 10.5 | 8.5 | 6 | 8.8 | 42.5x30x22 | | | | lugs |

©2019 Illinois Capacitor

ILLINOIS CAPACITOR a Cornell Dubilier Brand

North America
Tel: (847) 675-1760
sales@illcap.com

Asia
Tel: 852 2793 0931
sales@illcap.com.hk

# MHBS

**2,4,6, lug lead radial box**

| WVDC | Capacitance (µF) | IC PART NUMBER | dv/dt (V/µsec) | Maximum RMS Ripple Current (A) 100 kHz, +70°C | | | Typical ESR (mΩ) **, +25°C | Dimensions LxHxT (mm) | S (MM) | d (MM) | P (MM) | # Leads |
|---|---|---|---|---|---|---|---|---|---|---|---|---|
| | | | | +15°C | +10°C | +5°C | | | | | | |
| 1275 | 3.3 | 335MHBS70K2H | 61 | 11 | 8.5 | 6.5 | 8.1 | 32x37x22 | 27.5 | 1.2 | | 2 |
| 1275 | 3.3 | 335MHBS70K4H | 61 | 12 | 9 | 6.5 | 7.5 | 32x37x22 | 27.5 | 1.2 | 10.2 | 4 |
| 1275 | 3.3 | 335MHBS70K2J | 41 | 9 | 7.5 | 5.5 | 9.6 | 42.5x30x22 | 37.5 | 1.2 | | 2 |
| 1275 | 4 | 405MHBS70KJ## | 41 | 11.5 | 9 | 6.5 | 7.9 | 42.5x30x22 | | | | lugs |
| 1275 | 4 | 405MHBS70K2H | 61 | 12 | 9.5 | 7 | 7.1 | 32x37x22 | 27.5 | 1.2 | | 2 |
| 1275 | 4 | 405MHBS70K4H | 61 | 13.5 | 10.5 | 7.5 | 6.5 | 32x37x22 | 27.5 | 1.2 | 10.2 | 4 |
| 1275 | 4 | 405MHBS70K2J | 41 | 10 | 8 | 6 | 8.7 | 42.5x30x22 | 37.5 | 1.2 | | 2 |
| 1275 | 4.7 | 475MHBS70KJ## | 41 | 12.5 | 10 | 7.5 | 7.1 | 42.5x33.5x22 | | | | lugs |
| 1275 | 4.7 | 475MHBS70K2J | 41 | 10.5 | 8.5 | 6 | 7.9 | 42.5x33.5x22 | 37.5 | 1.2 | | 2 |
| 1275 | 4.7 | 475MHBS70K4J | 41 | 11.5 | 9 | 6.5 | 7.3 | 42.5x33.5x22 | 37.5 | 1.2 | 5.1 | 4 |
| 1275 | 5 | 505MHBS70KJ## | 41 | 12.5 | 10 | 7.5 | 6.9 | 42.5x33.5x22 | | | | lugs |
| 1275 | 5 | 505MHBS70K2J | 41 | 10.5 | 8.5 | 6.5 | 7.7 | 42.5x33.5x22 | 37.5 | 1.2 | | 2 |
| 1275 | 5 | 505MHBS70K4J | 41 | 11.5 | 9 | 6.5 | 7.1 | 42.5x33.5x22 | 37.5 | 1.2 | 5.1 | 4 |
| 1275 | 6.8 | 685MHBS70KJA## | 41 | 16 | 12.5 | 9.5 | 5.7 | 41.5x44x24 | | | | lugs |
| 1275 | 6.8 | 685MHBS70K2JA | 41 | 13.5 | 11 | 8 | 6.5 | 41.5x44x24 | 37.5 | 1.2 | | 2 |
| 1275 | 6.8 | 685MHBS70K4JA | 41 | 14.5 | 11.5 | 8.5 | 5.9 | 41.5x44x24 | 37.5 | 1.2 | 10.2 | 4 |
| 1275 | 7.5 | 755MHBS70KJA## | 41 | 17.5 | 13.5 | 10 | 5.3 | 41.5x44x24 | | | | lugs |
| 1275 | 7.5 | 755MHBS70K2JA | 41 | 14 | 11.5 | 8.5 | 6.1 | 41.5x44x24 | 37.5 | 1.2 | | 2 |
| 1275 | 7.5 | 755MHBS70K4JA | 41 | 16 | 12.5 | 9 | 5.5 | 41.5x44x24 | 37.5 | 1.2 | 10.2 | 4 |
| 1275 | 10 | 106MHBS70KJ## | 41 | 20 | 15.5 | 11.5 | 4.3 | 42.5x45x30 | | | | lugs |
| 1275 | 10 | 106MHBS70K2J | 41 | 14 | 13 | 9.5 | 5.1 | 42.5x45x30 | 37.5 | 1.2 | | 2 |
| 1275 | 10 | 106MHBS70K4J | 41 | 18 | 14 | 10.5 | 4.5 | 42.5x45x30 | 37.5 | 1.2 | 20.3 | 4 |
| 1275 | 12 | 126MHBS70KR## | 28 | 18.5 | 14.5 | 10 | 5.2 | 57.5x45x30 | | | | lugs |
| 1275 | 12 | 126MHBS70K2R | 28 | 14 | 12.5 | 9 | 6 | 57.5x45x30 | 52.5 | 1.2 | | 2 |
| 1275 | 12 | 126MHBS70K4R | 28 | 17 | 13.5 | 9.5 | 5.4 | 57.5x45x30 | 52.5 | 1.2 | 20.3 | 4 |
| 1275 | 15 | 156MHBS70KR## | 28 | 19.5 | 15.5 | 11.5 | 4.6 | 57.5x45x30 | | | | lugs |
| 1275 | 15 | 156MHBS70K2R | 28 | 14 | 13 | 10 | 5.4 | 57.5x45x30 | 52.5 | 1.2 | | 2 |
| 1275 | 15 | 156MHBS70K4R | 28 | 18 | 14.5 | 10.5 | 4.8 | 57.5x45x30 | 52.5 | 1.2 | 20.3 | 4 |
| 1275 | 20 | 206MHBS70KR## | 28 | 23.5 | 19 | 13.5 | 3.8 | 57.5x50x35 | | | | lugs |
| 1275 | 20 | 206MHBS70K2R | 28 | 14 | 14 | 11.5 | 4.6 | 57.5x50x35 | 52.5 | 1.2 | | 2 |
| 1275 | 20 | 206MHBS70K4R | 28 | 21.5 | 17.5 | 12 | 4 | 57.5x50x35 | 52.5 | 1.2 | 20.3 | 4 |

©2019 Illinois Capacitor

North America
Tel: (847) 675-1760
sales@illcap.com

Asia
Tel: 852 2793 0931
sales@illcap.com.hk