MHBS

Boxed Metallized Polypropylene Film

FEATURES	Small size - High voltage – High Capacitance
APPLICATIONS	UPS – DC link – AC/DC motor controls – Power inverters

Operating Temperature Range			**-40°C to +100°C** Above +85°C applied voltage must be de-rated by 1.5%/°C							
Capacitance Tolerance			±10% at 1 kHz, 25°C ±5% optional							
Surge Voltage	**VDC**	**Code**	**A35**	**A40**	**A45**	**A50**	**A55**	**A60**	**A70**	
		85°C	**575**	**700**	**800**	**900**	**1000**	**1100**	**1275**	
		70°C	630	770	880	1000	1100	1200	1400	
	Repetitive SVDC	**85°C**	660	805	920	1035	1150	1265	1465	
		70°C	720	885	1010	1150	1265	1380	1610	
	Non-repetitive SVDC	**85°C**	750	910	1040	1170	1300	1430	1655	
		70°C	815	1000	1140	1300	1430	1560	1820	
			Repetitive SVDC: Maximum repetitive voltage for 1 hour Max/Day							
AC Voltage	**Code**		**A35**	**A40**	**A45**	**A50**	**A55**	**A60**	**A70**	
	VDC		**575**	**700**	**800**	**900**	**1000**	**1100**	**1275**	
	VAC	**85°C**	240	285	315	350	400	420	440	
		70°C	250	300	330	370	420	440	460	

Dissipation Factor (MAX) Tan δ (%) at 1 kHz and 25°C	**C≤ 4μF**	**4μF<C≤12μF**	**12μF<C≤20μF**	**20μF<C≤40μF**	**40μF<C≤75μF**	**C>75μF**
	.06	.08	.11	.14	.17	.2

ESR (mΩ)	**Lead spacing (mm)**	**Frequency range**	**ESR Value**
	27.5	10kHz - 60kHz	See standard part listing
	37.5	10kHz - 45 kHz	See standard part listing
	52.5	10kHz - 30 kHz	See standard part listing

RMS Current	No RMS current is to be applied at temperatures > +95°C	
Ripple Current	See standard part listing, No ripple current is to be applied when the ambient temperature is≥+95°C	
Insulation Resistance	3000 MΩxuF (10000 MΩxuF typical) "Not to exceed 3GΩ" After 1 minute of 100VDC applied between the terminals at 25°C	
Self Inductance	<1 nano-Henry per mm of lead spacing and lead length	
Long Term Stability	Capacitance variation <1% MAX after 2 years	
Dielectric Strength	**Terminal to Terminal**	**Terminal to case**
	150% of VDC or 150% of VAC applied for 10 Seconds and 25°C	3KVAC at 50/60 Hz applied between the terminals and case for 60 Seconds and 25°C

CDE ILLINOIS CAPACITOR a Cornell Dubilier Brand

North America
Tel: (847) 675-1760
sales@illcap.com

Asia
Tel: 852 2793 0931
sales@illcap.com.hk

©2019 Illinois Capacitor

MHBS
Boxed Metallized Polypropylene Film

Life Expectancy	≥60000 with VAC, ≥200000 With WVDC applied at +70°C ≥30000 with VAC, ≥100000 With WVDC applied at +85°C ≥10000 with 0.8xVAC, ≥30000 With 0.8xWVDC applied at +100°C		
Failure Quota	300/billion component hours		
Damp Heat Test	**Test Condition**	**Performance requirements**	
	Temperature= +40°C ±2°C	**Max Capacitance change**	≤ ±3%% of initially measured valued
	Relative Humidity=93 ±2%	**DF Change**	≤ 200% of initially specified valued
	Test length= 56 days	**Insulation resistance**	≥ 50% of minimum specified value
Resistance to soldering Heat **Solder bath temperature: +260°C +/- 5°C** **Exposure time: 10 seconds +/- 1 second**	**Max Capacitance change**	≤1% of initially measured value	
	DF Change	≤ .1% at 1kHz	
	Insulation resistance	≥50% of minimum specified value	
Construction	Metallized Polypropylene film		
Electrodes	Vacuum deposited Metal layers		
Coating	Flame retardant Solvent resistant plastic case with epoxy end fill		
Lead Terminations	Lead free tinned copper leads		

©2019 Illinois Capacitor
North America
Tel: (847) 675-1760
sales@illcap.com

Asia
Tel: 852 2793 0931
sales@illcap.com.hk

MHBS

Boxed Metallized Polypropylene Film

Lead styles

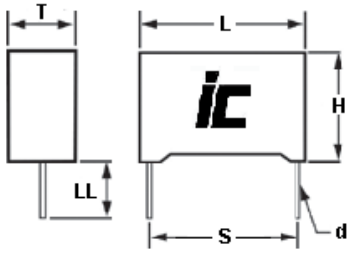

2 leads

Length (L)	32	41.5	42.5	57.5
Lead spacing (S)	27.5	37.5	37.5	52.5
Lead Length (LL)	5mm +/-1 mm			

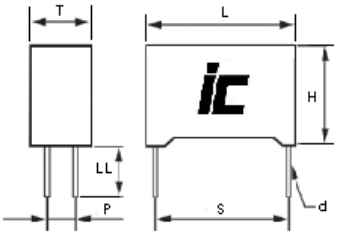

4 leads

Length (L)	32	41.5	42.5	57.5
Lead spacing (S)	27.5	37.5	37.5	52.5
Lead Spacing (P)	See part listing			
Lead Length (LL)	5mm +/-1 mm			

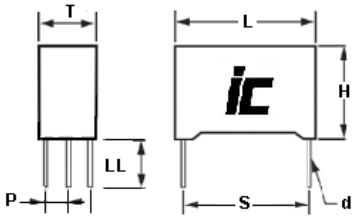

6 leads

Length (L)	32	41.5	42.5	57.5
Lead spacing (S)	27.5	37.5	37.5	52.5
Lead Spacing (P)	See part listing			
Lead Length (LL)	5mm +/-1 mm			

Dimensions in mm

©2019 Illinois Capacitor

North America
Tel: (847) 675-1760
sales@illcap.com

Asia
Tel: 852 2793 0931
sales@illcap.com.hk

MHBS

Boxed Metallized Polypropylene Film

STYLE S, SM8, T ,TM8

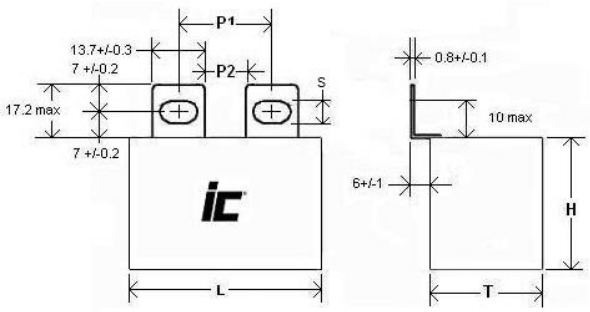

STYLE L

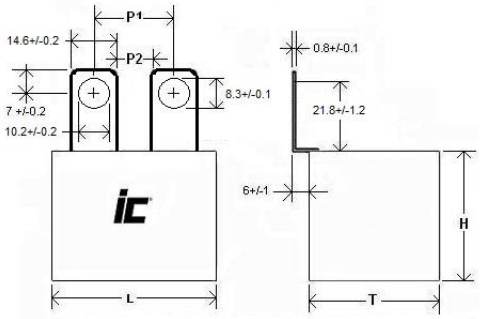

STYLE E

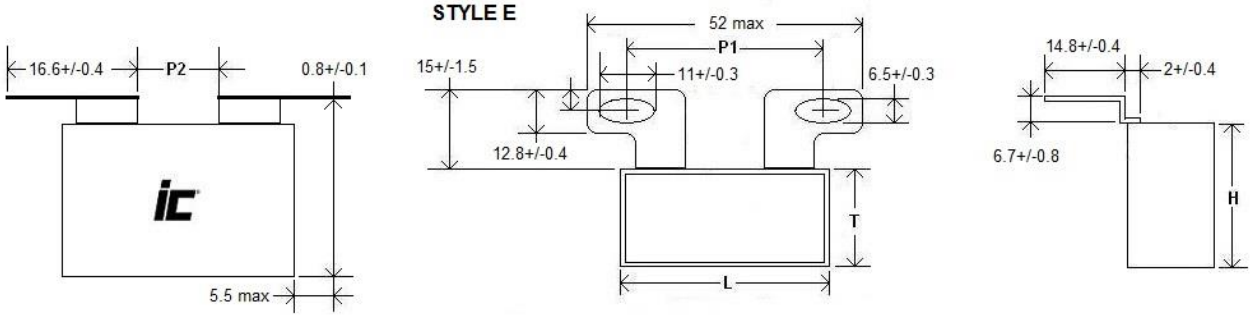

Style B

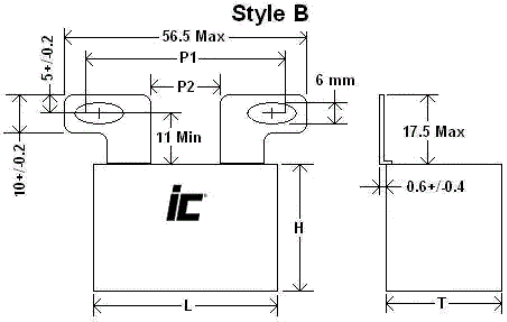

STYLE F, FM8, G, GM8

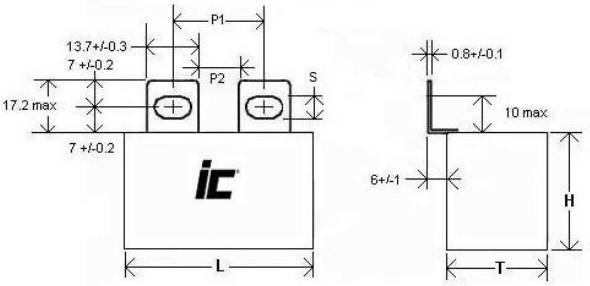

Fixing pitch and distance between lugs (mm)				
Lugs	L	P1	P2	S
S,V,F	42 - 42.5	23 - 28	11	6
	57.5	37 - 42	24	6
SM8,VM8, FM8	42 - 42.5	25 – 26	11	8
	57.5	39 - 40	24	8
T,W,G	42 - 42.5	20 – 25	8	6
	57.5	34 – 39	21	6
TM8,WM8,GM8	42 - 42.5	22 – 23	8	8
	57.5	36 – 37	21	8
N,P	57.5	23 – 28	11	6
NM8, PM8	57.5	25 - 26	11	8
A	42 - 42.5	51 – 64	----	8
	57.5	65 – 78	---	8
B	42 - 42.5	32 – 45	17	6
E	42 - 42.5	30 - 37	15	6
L	42 - 42.5	22 - 24	8	6
	57.5	36 - 38	21	8

Dimensions in mm

CDE ILLINOIS CAPACITOR a Cornell Dubilier Brand

North America
Tel: (847) 675-1760
sales@illcap.com

Asia
Tel: 852 2793 0931
sales@illcap.com.hk

©2019 Illinois Capacitor

MHBS

Boxed Metallized Polypropylene Film

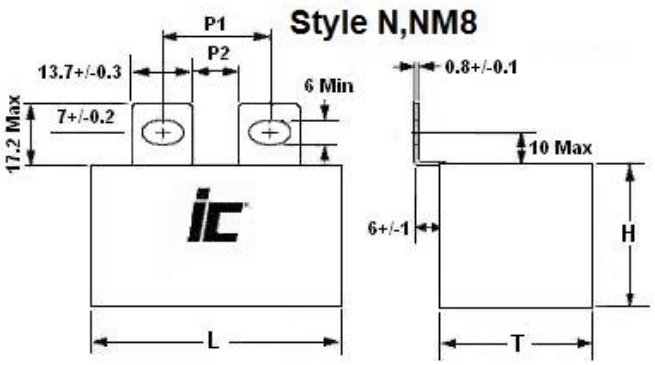

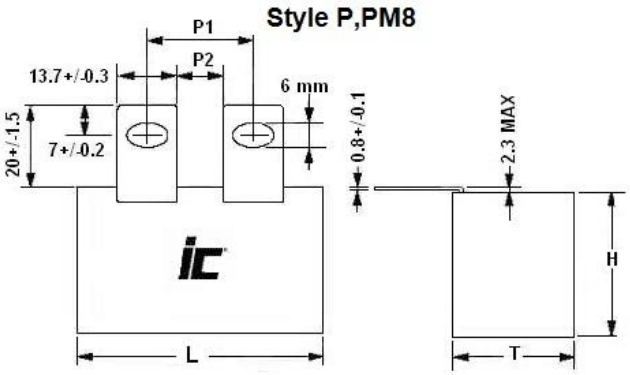

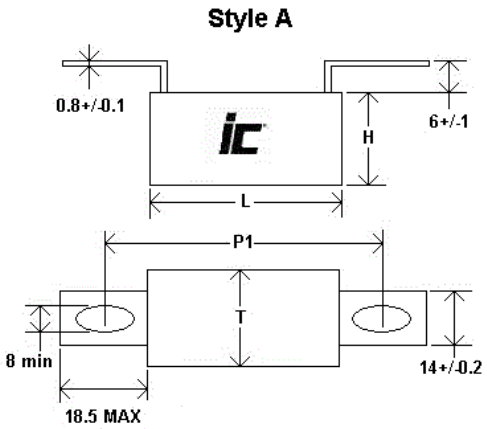

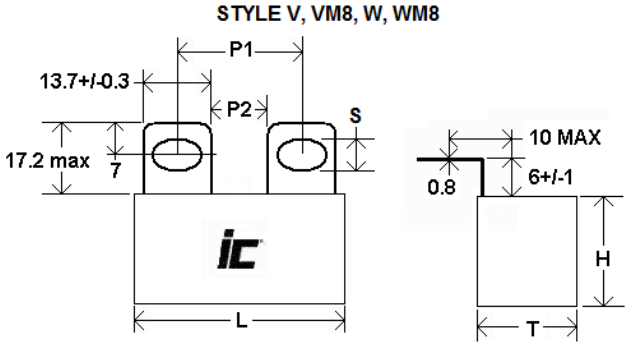

Dimensions in mm

©2019 Illinois Capacitor

North America
Tel: (847) 675-1760
sales@illcap.com

Asia
Tel: 852 2793 0931
sales@illcap.com.hk

MHBS

2,4,6, lug lead radial box

WVDC	Capacitance (µF)	IC PART NUMBER	dv/dt (V/µsec)	Maximum RMS Ripple Current (A) 100 kHz, +70°C			Typical ESR (mΩ) **, +25°C	Dimensions LxHxT (mm)	S (MM)	d (MM)	P (MM)	# Leads
				+15°C	+10°C	+5°C						
575	3.3	335MHBS35K2H	27	4.5	3.5	2.5	15	32x20x11	27.5	0.8		2
575	4.7	475MHBS35K2H	27	5.5	4.5	3.5	11.6	32x22x13	27.5	1		2
575	5	505MHBS35K2H	27	6	4.5	3.5	11	32x22x13	27.5	1		2
575	6.8	685MHBS35K2H	27	7	5.5	4	9.4	32x24.5x15	27.5	1		2
575	7.5	755MHBS35K2H	27	8	6.5	4.5	8.6	32x28x14	27.5	1.2		2
575	10	106MHBS35K2H	27	10	8	5.5	7	32x33x18	27.5	1.2		2
575	12	126MHBS35KJ##	19	11	8.5	6.5	6.6	42.5x28x17				lugs
575	12	126MHBS35K2H	27	11	8.5	6.5	6.1	32x33x18	27.5	1.2		2
575	12	126MHBS35K2J	19	9.5	7.5	5.5	7.4	42.5x28x17	37.5	1.2		2
575	15	156MHBS35KJ##	19	13	10	7.5	5.6	42.5x30x22				lugs
575	15	156MHBS35K4H	27	14.5	11.5	8.5	4.9	32x37x22	27.5	1.2	10.2	2
575	15	156MHBS35K2H	27	13.5	10.5	7.5	5.6	32x37x22	27.5	1.2		2
575	15	156MHBS35K2J	19	11	8.5	6.5	6.4	42.5x30x22	37.5	1.2		2
575	20	206MHBS35KJA##	19	16.5	12.5	9.5	4.8	41.5x40x20				lugs
575	20	206MHBS35K2JA	19	13.5	11	8	5.6	41.5x40x20	37.5	1.2		2
575	20	206MHBS35K4JA	19	15	12	8.5	5	41.5x40x20	37.5	1.2	10.2	4
575	25	256MHBS35KJ##	19	17	13.5	10	4.2	42.5x37x28				lugs
575	25	256MHBS35K2J	19	14	11.5	8.5	5	42.5x37x28	37.5	1.2		2
575	25	256MHBS35K4J	19	15.5	12.5	9	4.4	42.5x37x28	37.5	1.2	10.2	4
575	30	306MHBS35KJ##	19	18.5	14.5	10.5	3.8	42.5x37x28				lugs
575	30	306MHBS35K2J	19	14	12	9	4.6	42.5x37x28	37.5	1.2		2
575	30	306MHBS35K4J	19	16.5	13	9.5	4	42.5x37x28	37.5	1.2	10.2	4
575	35	356MHBS35KJ##	19	21	16.5	12.5	3.5	42.5x45x30				lugs
575	35	356MHBS35K2J	19	14	14	11	4.3	42.5x45x30	37.5	1.2		2
575	35	356MHBS35K4J	19	19	15.5	11	3.7	42.5x45x30	37.5	1.2	20.3	4
575	40	406MHBS35KJ##	19	22	17.5	13	3.2	42.5x45x30				lugs
575	40	406MHBS35K2J	19	14	14	11	4	42.5x45x30	37.5	1.2		2
575	40	406MHBS35K4J	19	20	16	12	3.4	42.5x45x30	37.5	1.2	20.3	4
575	50	506MHBS35KR##	12.5	21.5	17.5	12.5	3.8	57.5x45x30				lugs
575	50	506MHBS35K2R	12.5	14	14	10	4.6	57.5x45x30	52.5	1.2		2
575	50	506MHBS35K4R	12.5	19	15.5	11	4	57.5x45x30	52.5	1.2	20.3	4
575	60	606MHBS35KR##	12.5	23	18.5	13.5	3.4	57.5x50x35				lugs
575	60	606MHBS35K2R	12.5	14	14	10.5	4.2	57.5x45x30	52.5	1.2		2
575	60	606MHBS35K4R	12.5	20.5	16.5	12	3.6	57.5x45x30	52.5	1.2	20.3	4
575	75	756MHBS35KR##	12.5	25.5	20.5	15	3.1	57.5x50x35				lugs
575	75	756MHBS35K2R	12.5	14	14	12	3.9	57.5x50x35	52.5	1.2		2
575	75	756MHBS35K4R	12.5	23	18.5	13.5	3.3	57.5x50x35	52.5	1.2	20.3	4
575	90	906MHBS35K4R	12.5	25	21	14.5	3.1	57.5x57.5x38	52.5	1.2	20.3	4
575	90	906MHBS35K6R	12.5	26	23	16	2.9	57.5x57.5x38	52.5	1.2	10.2	6
575	100	107MHBS35K4R	12.5	26	21.5	15	3	57.5x57.5x38	52.5	1.2	20.3	4
575	100	107MHBS35K6R	12.5	27	22	15.5	2.8	57.5x57.5x38	52.5	1.2	10.2	6
700	2.5	255MHBS40K2H	31	4.5	3.5	3	15.8	32x20x11	27.5	0.8		2
700	2.5	255MHBS40K2H	31	4.5	4	3	15.8	32x20x11	27.5	0.8		2
700	3.3	335MHBS40K2H	31	5.5	4.5	3.5	13.3	32x22x13	27.5	1		2
700	4.7	475MHBS40K2H	31	6.5	5.5	4	10.5	32x24.5x15	27.5	1		2
700	5	505MHBS40K2H	31	7	5.5	4	9.7	32x24.5x15	27.5	1.2		2
700	7.5	755MHBS40K2J	21	7.5	6	4.5	9.2	42.5x25x14	37.5	1.2		2
700	12	126MHBS40KJ##	21	13	10	7.5	5.6	42.5x30x22				lugs
700	12	126MHBS40K2H	31	13	10.5	7.5	5.8	32x37x22	27.5	1.2		2
700	12	126MHBS40K4H	31	14.5	11.5	8.5	5.2	32x37x22	27.5	1.2	10.2	4
700	12	126MHBS40K2J	21	11	8.5	6.5	6.4	42.5x30x22	37.5	1.2		2
700	15	156MHBS40KJ##	21	14.5	11.5	8.5	4.7	42.5x33.5x22				lugs
700	15	156MHBS40K2J	21	12	9.5	7	5.5	42.5x33.5x22	37.5	1.2		2
700	15	156MHBS40K4J	21	13.5	10.5	7.5	4.9	42.5x33.5x22	37.5	1.2	5.1	4
700	20	206MHBS40KJ##	21	17.5	14	10	4.1	42.5x37x28				lugs
700	20	206MHBS40K2J	21	14	11.5	8.5	4.9	42.5x37x28	37.5	1.2		2
700	20	206MHBS40K4J	21	18.5	14.5	10.5	4.1	42.5x37x28	37.5	1.2	10.2	4
700	22	226MHBS40KJ##	21	19.5	15.5	11.5	3.8	42.5x37.5x28				2

©2019 Illinois Capacitor

ILLINOIS CAPACITOR a Cornell Dubilier Brand

North America
Tel: (847) 675-1760
sales@illcap.com

Asia
Tel: 852 2793 0931
sales@illcap.com.hk

MHBS

2,4,6, lug lead radial box

WVDC	Capacitance (µF)	IC PART NUMBER	dv/dt (V/µsec)	Maximum RMS Ripple Current (A) 100 kHz, +70°C			Typical ESR (mΩ) **, +25°C	Dimensions LxHxT (mm)	S (MM)	d (MM)	P (MM)	# Leads
				+15°C	+10°C	+5°C						
700	22	226MHBS40KJA##	21	18.5	14.5	10.5	3.8	41.5x44x24				lugs
700	22	226MHBS40K2J	21	14	13	9.5	4.6	42.5x37x28	37.5	1.2		2
700	22	226MHBS40K2JA	21	14	12	9	4.6	41.5x44x24	37.5	1.2		2
700	22	226MHBS40K4J	21	17.5	14	10.5	4	42.5x37.5x28	37.5	1.2	10.2	4
700	22	226MHBS40K4JA	21	16.5	13.5	10	4	41.5x44x24	37.5	1.2	10.2	4
700	25	256MHBS40KJA##	21	21	16.5	12	3.5	41.5x44x24				lugs
700	25	256MHBS40K2JA	21	14	13.5	10	4.3	41.5x44x24	37.5	1.2		2
700	25	256MHBS40K4JA	21	19	15	11	3.7	41.5x44x24	37.5	1.2	10.2	4
700	30	306MHBS40KJ##	21	22.5	17.5	13	3.2	42.5x45x30				lugs
700	30	306MHBS40K2J	21	14	14	11	4	42.5x45x30	37.5	1.2		2
700	30	306MHBS40K4J	21	20.5	16	12	3.4	42.5x45x30	37.5	1.2	20.3	4
700	40	406MHBS40KR##	14.5	22	17.5	12.5	3.6	57.5x45x30				lugs
700	40	406MHBS40K2R	14.5	14	14	10.5	4.4	57.5x45x30	52.5	1.2		2
700	40	406MHBS40K4R	14.5	20	16	11.5	3.8	57.5x45x30	52.5	1.2	20.3	4
700	45	456MHBS40KR##	14.5	23	18	13	3.4	57.5x45x30				lugs
700	45	456MHBS40K2R	14.5	14	14	11	4.2	57.5x45x30	52.5	1.2		2
700	45	456MHBS40K4R	14.5	21	16.5	12	3.6	57.5x45x30	52.5	1.2	20.3	4
700	50	506MHBS40KR##	14.5	24.5	19.5	14.5	3.2	57.5x50x35				lugs
700	50	506MHBS40K2R	14.5	14	14	12	4	57.5x50x35	52.5	1.2		2
700	50	506MHBS40K4R	14.5	22.5	18	13	3.4	57.5x50x35	52.5	1.2	20.3	4
700	55	556MHBS40KR##	14.5	25.5	20.5	15	3.1	57.5x50x35				lugs
700	55	556MHBS40K2R	14.5	14	14	12.5	3.9	57.5x50x35	52.5	1.2		2
700	55	556MHBS40K4R	14.5	23.5	19	13.5	3.3	57.5x50x35	52.5	1.2	20.3	4
700	60	606MHBS40KR##	14.5	26.5	21	15.5	2.9	57.5x50x35				lugs
700	60	606MHBS40K2R	14.5	14	14	13	3.7	57.5x50x35	52.5	1.2		2
700	60	606MHBS40K4R	14.5	24.5	19.5	14	3.1	57.5x50x35	52.5	1.2	20.3	4
700	75	756MHBS40KR##	14.5	28.5	24	17	2.7	57.5x57.5x38				lugs
700	75	756MHBS40K4R	14.5	26	21.5	15.5	2.9	57.5x57.5x38	52.5	1.2	20.3	4
700	75	756MHBS40K6R	14.5	27	22.5	16	2.7	57.5x57.5x38	52.5	1.2	10.2	6
700	80	806MHBS40K4R	14.5	26.5	22	15.5	2.8	57.5x57.5x38	52.5	1.2	20.3	4
700	80	806MHBS40K6R	14.5	27.5	22	16.5	2.6	57.5x57.5x38	52.5	1.2	10.2	6
800	2.2	225MHBS45K2H	36	4.5	4	3	15.3	32x20x11	27.5	0.8		2
800	3	305MHBS45K2H	36	5.5	4.5	3.5	12.4	32x22x13	27.5	1		2
800	4	405MHBS45K2H	36	6.5	5.5	4	10.8	32x24.5x15	27.5	1		2
800	5	505MHBS45K2H	36	7.5	6	4	10.5	32x28x14	27.5	1.2		2
800	5	505MHBS45K2J	24	7.5	6	4	10.3	42.5x25x14	37.5	1.2		2
800	6.8	685MHBS45K2H	36	9.5	7.5	5.5	7.6	32x33x18	27.5	1.2		2
800	7.5	755MHBS45KJ##	24	10.5	8.5	6	7.5	42.5x28x17				lugs
800	7.5	755MHBS45K2H	36	10.5	8.5	6	7.1	32x33x18	27.5	1.2		2
800	7.5	755MHBS45K4H	36	11.5	9	6.5	6.5	32x33x18	27.5	1.2	5.1	4
800	7.5	755MHBS45K2J	24	9	7	5	8.3	42.5x28x17	37.5	1.2		2
800	10	106MHBS45KJ##	24	12.5	10	7.5	6.2	42.5x30x22				lugs
800	10	106MHBS45K2H	36	13	10.5	7.5	5.9	32x37x22	27.5	1.2		2
800	10	106MHBS45K4H	24	14.5	11.5	8.5	5.3	32x37x22	27.5	1.2	10.2	4
800	10	106MHBS45K2J	24	10.5	8.5	6	7	42.5x30x22	37.5	1.2		2
800	10	106MHBS45K4J	24	11.5	9	6.5	6.4	42.5x30x22	37.5	1.2	5.1	4
800	12	126MHBS45KJ##	24	13.5	11	8	5.6	42.5x33.5x22				lugs
800	12	126MHBS45K2J	24	11.5	9	7	6.4	42.5x33.5x22	37.5	1.2		2
800	12	126MHBS45K4J	24	12.5	10	7.5	5.8	42.5x33.5x22	37.5	1.2	5.1	4
800	15	156MHBS45K2JA	24	13.5	11	8	5.6	41.5x40x20	37.5	1.2		2
800	15	156MHBS45K4JA	24	15	12	8.5	5	41.5x40x20	37.5	1.2	10.2	4
800	20	206MHBS45K2JA	24	14	13	9.5	4.8	41.5x44x24	37.5	1.2		2
800	20	206MHBS45K4JA	24	18	14.5	10.5	4.2	41.5x44x24	37.5	1.2	10.2	4
800	22	226MHBS45KJ##	24	20.5	16	12	3.8	42.5x45x30				lugs
800	22	226MHBS45K2J	24	14	13.5	10	4.6	42.5x45x30	37.5	1.2		2
800	22	226MHBS45K4J	24	18.5	14.5	10.5	4	42.5x45x30	37.5	1.2	20.3	4
800	25	256MHBS45KJ##	24	22	17	12.5	3.5	42.5x45x30				lugs
800	25	256MHBS45K2J	24	14	14	10.5	4.3	42.5x45x30	37.5	1.2		2

CDE ILLINOIS CAPACITOR a Cornell Dubilier Brand
©2019 Illinois Capacitor

North America
Tel: (847) 675-1760
sales@illcap.com

Asia
Tel: 852 2793 0931
sales@illcap.com.hk

MHBS

2,4,6, lug lead radial box

WVDC	Capacitance (µF)	IC PART NUMBER	dv/dt (V/µsec)	Maximum RMS Ripple Current (A) 100 kHz, +70°C			Typical ESR (mΩ) **, +25°C	Dimensions LxHxT (mm)	S (MM)	d (MM)	P (MM)	# Leads
				+15°C	+10°C	+5°C						
800	25	256MHBS45K4J	24	19.5	15.5	11.5	3.7	42.5x45x30	37.5	1.2	20.3	4
800	30	306MHBS45KR##	16.5	21	16.5	12	4.1	57.5x45x30				lugs
800	30	306MHBS45K2R	16.5	14	14	10	4.7	57.5x45x30	52.5	1.2		2
800	30	306MHBS45K4R	16.5	21	16.5	12	4.1	57.5x45x30	52.5	1.2	20.3	4
800	35	356MHBS45KR##	16.5	22	17.5	13	3.7	0x0x0				lugs
800	35	356MHBS45K2R	16.5	14	14	11	4.5	57.5x45x30	52.5	1.2		2
800	35	356MHBS45K4R	16.5	20	16	11.5	3.9	57.5x45x30	52.5	1.2	20.3	4
800	40	406MHBS45KR##	16.5	23.5	19	14	3.4	57.5x50x35				lugs
800	40	406MHBS45K2R	16.5	14	14	11.5	4.2	57.5x50x35	52.5	1.2		2
800	40	406MHBS45K4R	16.5	21.5	17.5	12.5	3.6	57.5x50x35	52.5	1.2	20.3	4
800	45	456MHBS45KR##	16.5	25.5	20	15	3.2	57.5x50x35				lugs
800	45	456MHBS45K2R	16.5	14	14	12	4	57.5x50x35	52.5	1.2		2
800	45	456MHBS45K4R	16.5	23	18.5	13.5	3.4	57.5x50x35	52.5	1.2	20.3	4
800	47	476MHBS45K2R	16.5	14	14	12.5	3.9	57.5x50x35	52.5	1.2		2
800	47	476MHBS45K4R	16.5	23.5	19	13.5	3.3	57.5x50x35	52.5	1.2	20.3	4
800	60	606MHBS45KR##	16.5	28.5	22.5	16.5	2.8	57.5x57.5x38				lugs
800	60	606MHBS45K4R	16.5	25.5	20.5	15.5	3	57.5x57.5x38	52.5	1.2	20.3	4
800	60	606MHBS45K6R	16.5	26.5	21.5	15.5	2.8	57.5x57.5x38	52.5	1.2	10.2	6
800	65	656MHBS45K4R	16.5	26.5	21	15.5	2.9	57.5x57.5x38	52.5	1.2	20.3	4
800	65	656MHBS45K6R	16.5	27.5	22	16	2.7	57.5x57.5x38	52.5	1.2	10.2	6
900	2.2	225MHBS50K2H	41.5	5	4	3	14.7	32x22x13	27.5	1		2
900	2.5	255MHBS50K2H	41.5	5.5	4.5	3	13.5	32x22x13	27.5	1		2
900	3	305MHBS50K2H	41.5	6.5	5	3.5	11.9	32x24.5x15	27.5	1		2
900	3.3	335MHBS50K2H	41.5	7	5.5	4	11	32x28x14	27.5	1.2		2
900	4.7	475MHBS50K2J	28	7	5.5	4	10.6	42.5x25x14	27.5	1.2		2
900	6	605MHBS50KJ##	28	10.5	8.5	6	8.4	42.5x28x17				lugs
900	6	605MHBS50K2H	41.5	9.5	7.5	5.5	7.6	32x33x18	27.5	1.2		2
900	6	605MHBS50K4H	41.5	10.5	8.5	6	7	32x33x18	27.5	1.2	5.1	2
900	6	605MHBS50K2J	42.5	9	7	5	9.2	42.5x18x17	37.5	1.2		4
900	7.5	755MHBS50KH##	28	12	9.5	7	7.2	42.5x30x22				lugs
900	7.5	755MHBS50K2H	41.5	12.5	9.5	7	6.9	32x37x22	27.5	1.2		2
900	7.5	755MHBS50K4H	41.5	13.5	10.5	8	6.3	32x37x22	27.5	1.2	10.2	4
900	7.5	755MHBS50K2J	28	10	8	5.5	8	42.5x30x22	37.5	1.2		2
900	10	106MHBS50KJ##	28	13.5	10.5	8	6	42.5x33.5x22				lugs
900	10	106MHBS50K2J	28	11.5	9	6.5	6.8	42.5x33.5x22	37.5	1.2		2
900	10	106MHBS50K4J	28	12.5	9.5	7	6.2	42.5x33.5x22	37.5	1.2	5.1	4
900	12	126MHBS50KJA##	28	15.5	12.5	9	5.5	41.5x40x20				lugs
900	12	126MHBS50K2JA	28	13.5	11	7.5	6.3	41.5x40x20	37.5	1.2		2
900	12	126MHBS50K4JA	28	14.5	11.5	8	5.7	41.5x40x20	37.5	1.2	10.2	4
900	15	156MHBS50KJ##	28	17	14	10.5	4.5	42.5x37x28				lugs
900	15	156MHBS50KJA##	28	18.5	15	11.5	4.5	41.5x44x24				lugs
900	15	156MHBS50KJ##	28	17.5	14	10.5	4.5	42.5x37x28				lugs
900	15	156MHBS50K2JA	28	14	12.5	9.5	5.3	41.5x44x24	37.5	1.2		2
900	15	156MHBS50K2J	28	14	11.5	8	5.3	42.5x37x28	37.5	1.2		2
900	15	156MHBS50K2JA	28	14	12.5	9.5	5.3	41.5x44x24	37.5	1.2		2
900	15	156MHBS50K4J	28	15.5	12.5	9	4.7	42.5x37x28	37.5	1.2	10.2	4
900	15	156MHBS50K4JA	28	17	14	10.5	4.7	41.5x44x24	37.5	1.2	10.2	4
900	20	206MHBS50K2J	28	14	14	10.5	4.5	42.5x45x30	37.5	1.2		2
900	20	206MHBS50K4J	28	19	15	11	3.9	42.5x45x30	37.5	1.2	20.3	4
900	20	206MHBS50KJ##	28	21	16.5	12	3.7	42.5x45x30	37.5			lugs
900	25	256MHBS50KR##	18.5	19.5	16	11.5	4.5	57.5x45x30				lugs
900	25	256MHBS50K2R	18.5	14	13	10	5.3	57.5x45x30	52.5	1.2		2
900	25	256MHBS50K4R	18.5	18	15	11	4.7	57.5x45x30	52.5	1.2	20.3	4
900	35	356MHBS50KR##	18.5	24	19	14	3.4	57.5x50x35				lugs
900	35	356MHBS50K2R	18.5	14	14	12	4.2	57.5x50x35	52.5	1.2		2
900	35	356MHBS50K4R	18.5	22	17.5	13	3.6	57.5x50x35	52.5	1.2	20.3	4
900	40	406MHBS50KR2	18.5	14	14	13	3.9	57.5x50x30	52.5	1.2		2
900	40	406MHBS50K4R	18.5	23.5	19	13.5	3.3	57.5x50x30	52.5	1.2	20.3	4

©2019 Illinois Capacitor

ILLINOIS CAPACITOR a Cornell Dubilier Brand

North America
Tel: (847) 675-1760
sales@illcap.com

Asia
Tel: 852 2793 0931
sales@illcap.com.hk

MHBS

2,4,6, lug lead radial box

WVDC	Capacitance (µF)	IC PART NUMBER	dv/dt (V/µsec)	Maximum RMS Ripple Current (A) 100 kHz, +70°C			Typical ESR (mΩ) **, +25°C	Dimensions LxHxT (mm)	S (MM)	d (MM)	P (MM)	# Leads
				+15°C	+10°C	+5°C						
900	47	476MHBS50KR##	18.5	28.5	23	16.5	2.8	57.5x57.5x38				lugs
900	47	476MHBS50K4R	18.5	25.5	20.5	15	3	57.5x57.5x38	52.5	1.2	20.3	4
900	47	476MHBS50K6R	18.5	26.5	21.5	15.5	2.8	57.5x57.5x38	52.5	1.2	10.2	6
900	50	506MHBS50K4R	18.5	26	21	15	3	57.5x57.5x38	52.5	1.2	20.3	4
900	50	506MHBS50K6R	18.5	27	22	16	2.8	57.5x57.5x38	52.5	1.2	10.2	lugs
1000	1.5	155MHBS55K2H	47	4.5	3.5	2.5	17.8	32x20x11	27.5	0.8		2
1000	2	205MHBS55K2H	47	5.5	4	3	14.5	32x22x13	27.5	1		2
1000	2.5	255MHBS55K2H	47	6	5	3.5	12.8	32x24.5x15	27.5	1		2
1000	2.5	255MHBS55K2H	47	6	5	3.5	12.8	32x28x15	27.5	1.2		2
1000	3	305MHBS55K2H	47	7.5	6	4	11	32x28x14	27.5	1.2		2
1000	4	405MHBS55K2J	31	7	5.5	4	11	42.5x25x14	37.5	1.2		2
1000	4.7	475MHBS55KJ##	31	9.5	7.5	5.5	8.7	42.5x28x17				lugs
1000	4.7	475MHBS55K2H	47	9.5	7.5	5.5	8.3	32x33x18	27.5	1.2		2
1000	4.7	475MHBS55K4H	47	10.5	8.5	6	7.7	32x33x18	27.5	1.2	10.2	4
1000	4.7	475MHBS55K2J	31	8.5	6.5	4.5	9.6	42.5x28x17	37.5	1.2		2
1000	4.7	475MHBS55K2J	31	8.5	6.5	4.5	9.6	42.5x28x17	37.5	1.2		2
1000	5	505MHBS55KJ##	31	10.5	8.5	6	8.5	42.5x28x17				lugs
1000	5	505MHBS55K2H	47	10	7.5	5.5	8	32x33x18	27.5	1.2		2
1000	5	505MHBS55K4H	47	11	9	6.5	7.4	32x33x18	27.5	1.2	10.2	4
1000	5	505MHBS55K2J	31	9.5	7.5	5.5	9.3	42.5x28x17	37.5	1.2		2
1000	6.8	685MHBS55KJ##	31	11.5	9	7	7.1	42.5x30x22				lugs
1000	6.8	685MHBS55K2H	47	12	10	7.5	6.9	32x37x22	27.5	1.2		2
1000	6.8	685MHBS55K4H	47	13.5	11	8	6.3	32x37x22	27.5	1.2	10.2	4
1000	6.8	685MHBS55K2J	31	10	8	6	7.9	42.5x30x22	37.5	1.2		2
1000	7.5	755MHBS55KJ##	31	13	10.5	7.5	6.6	42.5x33.5x22				lugs
1000	7.5	755MHBS55K2J	31	11	8.5	6.5	7.4	42.5x33.5x22	37.5	1.2		2
1000	7.5	755MHBS55K4J	31	12	9.5	7	6.8	42.5x33.5x22	37.5	1.2	5.1	4
1000	9	905MHBS55KJA##	31	15.5	12	8.5	5.8	41.5x40x20				lugs
1000	9	905MHBS55K2JA	31	13	10	7.5	6.6	41.5x40x20	37.5	1.2		2
1000	9	905MHBS55K4JA	31	14.5	11	8	6	41.5x40x20	37.5	1.2	10.2	4
1000	10	106MHBS55K2JA	31	13.5	10.5	8	6.3	41.5x40x20	37.5	1.2		2
1000	10	106MHBS55K4JA	31	15	11.5	8.5	5.7	41.5x40x20	37.5	1.2	10.2	4
1000	12	126MHBS55KJA##	31	16.5	13.5	10	4.9	41.5x44x24				lugs
1000	12	126MHBS55KJ##	31	18	14	10.5	4.9	42.5x37x28				lugs
1000	12	126MHBS55K2JA	31	14	12	9	5.7	41.5x44x24	37.5	1.2		2
1000	12	126MHBS55K2J	31	14	12	9	5.7	42.5x37x28	37.5	1.2		2
1000	12	126MHBS55K4JA	31	16.5	13.5	9.5	5.1	41.5x44x24	37.5	1.2	10.2	4
1000	12	126MHBS55K4J	31	16.5	13.5	9.5	5.1	42.5x37x28	37.5	1.2	10.2	4
1000	15	156MHBS55KJ##	31	20	16	12	4.2	42.5x45x30				lugs
1000	15	156MHBS55K2J	31	14	13.5	10	5	42.5x45x30	37.5	1.2		2
1000	15	156MHBS55K4J	31	18	14.5	11	4.4	42.5x45x30	37.5	1.2	20.3	4
1000	22	226MHBS55KR##	21	20.5	16.5	12	4.3	57.5x45x30				lugs
1000	22	226MHBS55K2R	21	14	13.5	10	5.1	57.5x45x30	52.5	1.2		2
1000	22	226MHBS55K4R	21	18.5	15	11	4.5	57.5x45x30	52.5	1.2	20.3	4
1000	30	306MHBS55KR##	21	24	19	13.5	3.6	57.5x50x35				lugs
1000	30	306MHBS55K2R	21	14	14	11.5	4.3	57.5x50x35	52.5	1.2		2
1000	30	306MHBS55K4R	21	22	17.5	12.5	3.8	57.5x50x35	52.5	1.2	20.3	4
1000	33	336MHBS55K2R	21	14	14	12	4.1	57.5x50x35	52.5	1.2		2
1000	33	336MHBS55K4R	21	23	18.5	13	3.5	57.5x50x35	52.5	1.2	20.3	4
1000	40	406MHBS55KR##	21	27.5	22	16.5	3	57.5x57.5x38				lugs
1000	40	406MHBS55K4R	21	25	20	14.5	3.2	57.5x57.5x38	52.5	1.2	20.3	4
1000	40	406MHBS55K6R	21	26	15	3	3	57.5x57.5x38	52.5	1.2	10.2	6
1100	1.2	125MHBS60K2H	50	4.5	3.5	2.5	18	32x20x11	27.5	0.8		2
1100	1.5	155MHBS60K2H	50	5	4	3	15.5	32x22x13	27.5	1		2
1100	2	205MHBS60K2H	50	6	5	3.5	12.9	32x24.5x15	27.5	1		2
1100	2.2	225MHBS60K2H	50	6	5	3.5	12.2	32x24.5x15	27.5	1		2
1100	2.5	255MHBS60K2H	50	7	5.5	4	10.8	32x28x14	27.5	1.2		2
1100	3	305MHBS60K2J	34	6.5	5	4	11.8	42x25x14	37.5	1.2		2

CDE ILLINOIS CAPACITOR a Cornell Dubilier Brand
©2019 Illinois Capacitor

North America
Tel: (847) 675-1760
sales@illcap.com

Asia
Tel: 852 2793 0931
sales@illcap.com.hk

MHBS

2,4,6, lug lead radial box

WVDC	Capacitance (µF)	IC PART NUMBER	dv/dt (V/µsec)	Maximum RMS Ripple Current (A) 100 kHz, +70°C			Typical ESR (mΩ) **, +25°C	Dimensions LxHxT (mm)	S (MM)	d (MM)	P (MM)	# Leads
				+15°C	+10°C	+5°C						
1100	3.3	335MHBS60K2H	50	9	7	5	9.2	32x33x18	27.5	1.2		2
1100	4	405MHBS60KJ##	34	9.5	7.5	5.5	9.1	42.5x28x17				lugs
1100	4	405MHBS60K2H	50	9.5	7.5	5.5	8.1	32x33x18	27.5	1.2		2
1100	4	405MHBS60K4H	50	10.5	8.5	6	7.5	32x33x18	27.5	1.2	5.1	4
1100	4	405MHBS60K2J	34	8.5	6.5	4.5	9.9	42.5x28x17	37.5	1.2		2
1100	4.7	475MHBS60KJ##	34	11.5	8.5	6.5	7.5	42.5x30x22				lugs
1100	4.7	475MHBS60K2H	50	11.5	9	7	7.4	32x37x22	27.5	1.2		2
1100	4.7	475MHBS60K4H	50	12.5	10	7.5	6.8	32x37x22	27.5	1.2	10.2	4
1100	4.7	475MHBS60K2J	34	10	7.5	5.5	8.3	42.5x30x22	37.5	1.2		2
1100	5	505MHBS60KJ##	34	12	9	6.5	7.3	42.5x30x22				lugs
1100	5	505MHBS60K2H	50	12	9.5	7	7.2	32x37x22	27.5	1.2		2
1100	5	505MHBS60K4H	50	13	10.5	7.5	6.6	32x37x22	27.5	1.2	10.2	4
1100	5	505MHBS60K2J	34	10.5	8	5.5	8.1	42.5x30x22	37.5	1.2		2
1100	6.8	685MHBS60KJ##	34	13	10.5	7.5	6.1	42.5x33.5x22				lugs
1100	6.8	685MHBS60K2J	34	11	9	6.5	6.9	42.5x33.5x22	37.5	1.2		2
1100	6.8	685MHBS60K4J	34	12	9.5	7	6.3	42.5x33.5x22	37.5	1.2	5.1	4
1100	7.5	755MHBS70KJ##	41	17.5	13.5	10	5.3	42.5x37x28				lugs
1100	7.5	755MHBS60KJA##	34	14	11.5	8.5	5.8	41.5x40x20				lugs
1100	7.5	755MHBS70K2J	41	14	11.5	8.5	6.1	42.5x37x28	37.5	1.2		2
1100	7.5	755MHBS60K2J	34	11.5	9.5	6.5	6.6	42.5x33.5x22	37.5	1.2		2
1100	7.5	755MHBS60K4J	34	12.5	10.5	7.5	6	42.5x33.5x22	37.5	1.2	10.2	4
1100	7.5	755MHBS70K4J	41	16	12.5	9	5.5	42.5x37x28	37.5	1.2	10.2	4
1100	10	106MHBS60KJ##	34	18.5	14.5	10.5	4.7	42.5x37x28				lugs
1100	10	106MHBS60KJA##	34	18.5	14.5	10.5	4.7	41.5x44x24				lugs
1100	10	106MHBS60K2J	34	14	12.5	9	5.5	42.5x37x28	37.5	1.2		2
1100	10	106MHBS60K2JA	34	14	12.5	9	5.5	41.5x44x24	37.5	1.2		2
1100	10	106MHBS60K4JA	34	17	13.5	10	4.9	41.5x44x24	37.5	1.2	10.2	4
1100	10	106MHBS60K4J	34	17	13.5	10	4.9	42.5x37x28	37.5	1.2	10.2	4
1100	12	126MHBS60KJ##	34	20	15.5	11.5	4.2	42.5x45x30				lugs
1100	12	126MHBS60K2J	34	14	13.5	10	5	42.5x45x30	37.5	1.2		2
1100	12	126MHBS60K4J	34	18.5	14.5	10.5	4.4	42.5x45x30	37.5	1.2	20.3	4
1100	20	206MHBS60KR##	23	21	17	12.5	4	57.5x45x30				lugs
1100	20	206MHBS60K2R	23	14	13.5	10	4.8	57.5x45x30	52.5	1.2		2
1100	20	206MHBS60K4R	23	19	15	11	4.2	57.5x45x30	52.5	1.2	20.3	4
1100	22	226MHBS60KR##	23	23	18.5	13	3.8	57.5x50x35				lugs
1100	22	226MHBS60K2R	23	14	14	11	4.6	57.5x50x35	52.5	1.2		2
1100	22	226MHBS60K4R	23	21	17	12	4	57.5x50x35	52.5	1.2	20.3	4
1100	25	256MHBS70KR##	28	26	21	15	3.4	0x0x0				lugs
1100	25	256MHBS60K2R	23	14	14	12	4.4	57.5x50x35	52.5	1.2		2
1100	25	256MHBS60K4R	23	22	17.5	12.5	3.8	57.5x50x35	52.5	1.2	20.3	4
1100	25	256MHBS70K4R	28	23	19	13.5	3.6	57.5x57.5x38	52.5	1.2	20.3	4
1100	25	256MHBS70K6R	28	24	19.5	14	3.4	57.5x57.5x38	52.5	1.2	10.2	6
1100	25	256MHBS60KR##	23	24	19.5	14	3.6	57.5x50x35	52.5			lugs
1100	33	336MHBS60KR##	23	25.5	20.5	15	3.1	57.5x57.5x38				lugs
1100	33	336MHBS60K4R	23	24.5	19.5	14.5	3.3	57.5x57.5x38	52.5	1.2	20.3	4
1100	35	356MHBS60K4R	23	25	20	14.5	3.2	57.5x57.5x38	52.5	1.2	20.3	4
1100	35	356MHBS60K6R	23	26	20.5	15	3	57.5x57.5x38	52.5	1.2	10.2	6
1275	0.68	684MHBS70K2H	61	4	3	2.5	23	32x20x11	27.5	0.8		2
1275	1	105MHBS70K2H	61	5	4	3	17.8	32x22x13	27.5	1		2
1275	1.5	155MHBS70K2H	61	6	4.5	3.5	14	32x24.5x15	27.5	1		2
1275	2	205MHBS70K2H	61	8	6.5	4.5	11.5	32x33x18	27.5	1.2		2
1275	2.2	225MHBS70K2H	61	8.5	6.5	4.5	10.8	32x33x18	27.5	1.2		2
1275	2.2	225MHBS70K2J	41	6.5	5	4	12.5	42.5x25x14	37.5	1.2		2
1275	2.5	255MHBS70K2H	61	9	7	5	9.7	32x33x18	27.5	1.2		2
1275	3	305MHBS70KJ##	41	9.5	7.5	5.5	9.3	42.5x28x17				lugs
1275	3	305MHBS70K2H	61	9.5	7.5	5.5	8.6	32x33x18	27.5	1.2		2
1275	3	305MHBS70K2J	41	8	6.5	5	10.1	42.5x28x17	37.5	1.2		2
1275	3.3	335MHBS70KJ##	41	10.5	8.5	6	8.8	42.5x30x22				lugs

©2019 Illinois Capacitor

ILLINOIS CAPACITOR a Cornell Dubilier Brand

North America
Tel: (847) 675-1760
sales@illcap.com

Asia
Tel: 852 2793 0931
sales@illcap.com.hk

MHBS

2,4,6, lug lead radial box

WVDC	Capacitance (µF)	IC PART NUMBER	dv/dt (V/µsec)	Maximum RMS Ripple Current (A) 100 kHz, +70°C			Typical ESR (mΩ) **, +25°C	Dimensions LxHxT (mm)	S (MM)	d (MM)	P (MM)	# Leads
				+15°C	+10°C	+5°C						
1275	3.3	335MHBS70K2H	61	11	8.5	6.5	8.1	32x37x22	27.5	1.2		2
1275	3.3	335MHBS70K4H	61	12	9	6.5	7.5	32x37x22	27.5	1.2	10.2	4
1275	3.3	335MHBS70K2J	41	9	7.5	5.5	9.6	42.5x30x22	37.5	1.2		2
1275	4	405MHBS70KJ##	41	11.5	9	6.5	7.9	42.5x30x22				lugs
1275	4	405MHBS70K2H	61	12	9.5	7	7.1	32x37x22	27.5	1.2		2
1275	4	405MHBS70K4H	61	13.5	10.5	7.5	6.5	32x37x22	27.5	1.2	10.2	4
1275	4	405MHBS70K2J	41	10	8	6	8.7	42.5x30x22	37.5	1.2		2
1275	4.7	475MHBS70KJ##	41	12.5	10	7.5	7.1	42.5x33.5x22				lugs
1275	4.7	475MHBS70K2J	41	10.5	8.5	6	7.9	42.5x33.5x22	37.5	1.2		2
1275	4.7	475MHBS70K4J	41	11.5	9	6.5	7.3	42.5x33.5x22	37.5	1.2	5.1	4
1275	5	505MHBS70KJ##	41	12.5	10	7.5	6.9	42.5x33.5x22				lugs
1275	5	505MHBS70K2J	41	10.5	8.5	6.5	7.7	42.5x33.5x22	37.5	1.2		2
1275	5	505MHBS70K4J	41	11.5	9	6.5	7.1	42.5x33.5x22	37.5	1.2	5.1	4
1275	6.8	685MHBS70KJA##	41	16	12.5	9.5	5.7	41.5x44x24				lugs
1275	6.8	685MHBS70K2JA	41	13.5	11	8	6.5	41.5x44x24	37.5	1.2		2
1275	6.8	685MHBS70K4JA	41	14.5	11.5	8.5	5.9	41.5x44x24	37.5	1.2	10.2	4
1275	7.5	755MHBS70KJA##	41	17.5	13.5	10	5.3	41.5x44x24				lugs
1275	7.5	755MHBS70K2JA	41	14	11.5	8.5	6.1	41.5x44x24	37.5	1.2		2
1275	7.5	755MHBS70K4JA	41	16	12.5	9	5.5	41.5x44x24	37.5	1.2	10.2	4
1275	10	106MHBS70KJ##	41	20	15.5	11.5	4.3	42.5x45x30				lugs
1275	10	106MHBS70K2J	41	14	13	9.5	5.1	42.5x45x30	37.5	1.2		2
1275	10	106MHBS70K4J	41	18	14	10.5	4.5	42.5x45x30	37.5	1.2	20.3	4
1275	12	126MHBS70KR##	28	18.5	14.5	10	5.2	57.5x45x30				lugs
1275	12	126MHBS70K2R	28	14	12.5	9	6	57.5x45x30	52.5	1.2		2
1275	12	126MHBS70K4R	28	17	13.5	9.5	5.4	57.5x45x30	52.5	1.2	20.3	4
1275	15	156MHBS70KR##	28	19.5	15.5	11.5	4.6	57.5x45x30				lugs
1275	15	156MHBS70K2R	28	14	13	10	5.4	57.5x45x30	52.5	1.2		2
1275	15	156MHBS70K4R	28	18	14.5	10.5	4.8	57.5x45x30	52.5	1.2	20.3	4
1275	20	206MHBS70KR##	28	23.5	19	13.5	3.8	57.5x50x35				lugs
1275	20	206MHBS70K2R	28	14	14	11.5	4.6	57.5x50x35	52.5	1.2		2
1275	20	206MHBS70K4R	28	21.5	17.5	12	4	57.5x50x35	52.5	1.2	20.3	4

©2019 Illinois Capacitor

North America
Tel: (847) 675-1760
sales@illcap.com

Asia
Tel: 852 2793 0931
sales@illcap.com.hk