UNCONTROLLED DOCUMENT

PART NUMBER	REV.
LPF-R011340S	

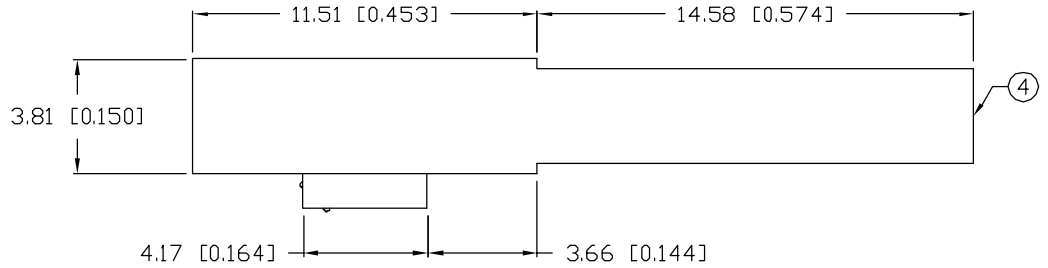

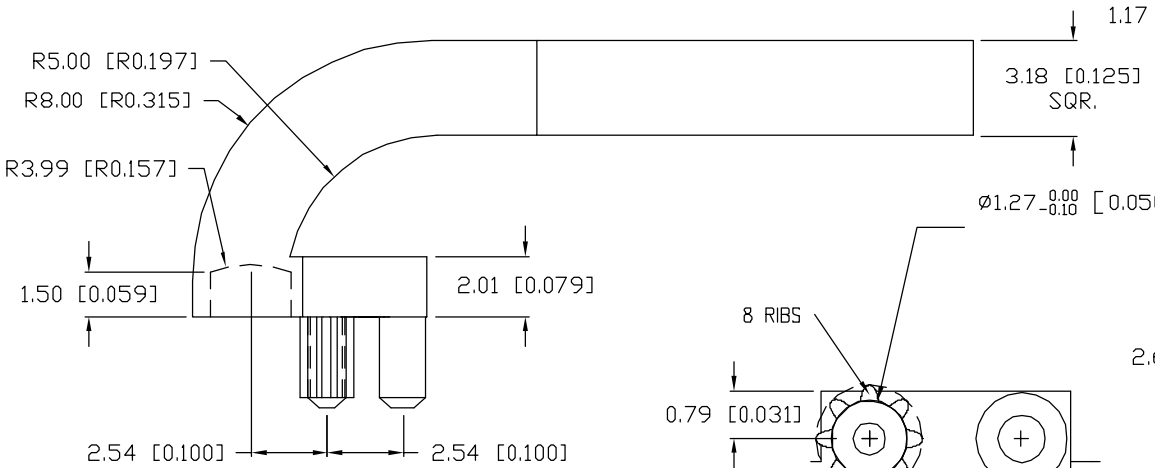

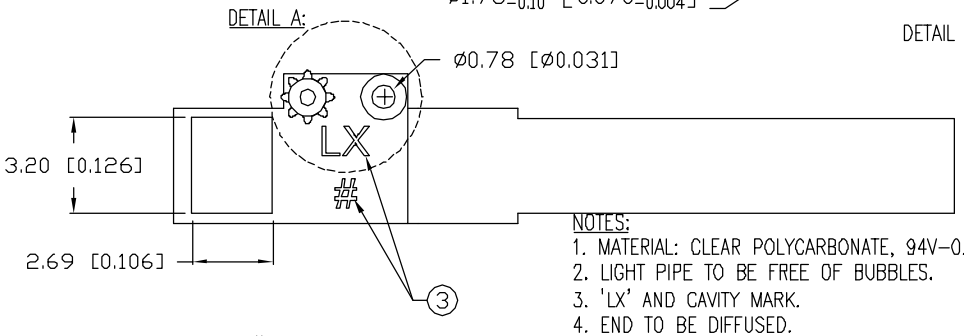

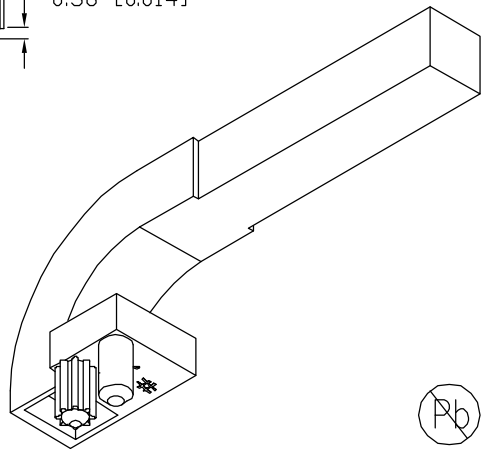

NOTES:
1. MATERIAL: CLEAR POLYCARBONATE, 94V-0.
2. LIGHT PIPE TO BE FREE OF BUBBLES.
3. 'LX' AND CAVITY MARK.
4. END TO BE DIFFUSED.
5. PEGS ARE TO BE PRESS-FIT INTO 0.0635"±0.002" HOLES.

REPLACES PART #: LPF-R011331S

*UNLESS OTHERWISE SPECIFIED TOLERANCES PER DECIMAL PRECISION ARE: X=±1 (±0.039), X.X=±0.5 (±0.020), X.XX=±0.25 (±0.010), X.XXX=±0.127 (±0.005). LEAD SIZE=±0.05 (±0.002), LEAD LENGTH=±0.75 (±0.030). MIN= +DECIMAL PRECISION -0.00 MAX.= +0.00 -DECIMAL PRECISION

Pb

UNCONTROLLED DOCUMENT

REV.	PART NUMBER
	LPF-R011340S

CUSTOM LIGHT PIPE.

CONFIDENTIAL INFORMATION
THE INFORMATION CONTAINED IN THIS DOCUMENT IS THE PROPERTY OF LUMEX INC. EXCEPT AS SPECIFICALLY AUTHORIZED IN WRITING BY LUMEX INC., THE HOLDER OF THIS DOCUMENT SHALL KEEP ALL INFORMATION CONTAINED HEREIN CONFIDENTIAL AND SHALL PROTECT SAME IN WHOLE OR IN PART FROM DISCLOSURE AND DISSEMINATION TO ALL THIRD PARTIES.

RELIABILITY NOTE
OUR MANY YEARS OF EXPERIENCE DATA ACCUMULATION INDICATE THAT SOLDER HEAT IS A MAJOR CAUSE OF EARLY AND FUTURE FAILURE. PLEASE PAY ATTENTION TO YOUR SOLDERING PROCESS.

LUMEX INC.
290 E. HELEN ROAD
PALATINE, IL 60067-6976
PHONE: +1.847.359.2790
US WEB: www.lumex.com
TW WEB: www.lumex.com.tw

DRAWN BY:	CHECKED BY:	APPROVED BY:	DATE: 07.30.08
JN			PAGE: 1 OF 1
			SCALE: N/A