# Series 801 Mighty Mouse
# Double-Start ACME Thread Metal Protective Cover
## 667-217 and 667-218 Ordering Information

**Protect Connectors From Damage**
Machined aluminum covers have rubber gaskets for a watertight fit.

**Stainless Steel Fittings and Rings**
Choose small diameter eye fittings for panel attachment. Larger rings fit under the jam nut or over cable jackets. Split rings can be installed on fully assembled cables.

**Polyurethane-Coated SST Wire Rope** offers high strength, excellent abrasion resistance and good flexibility. Or, choose Fluoropolymer jacket for high temperature exposure.

**Braided Nylon Rope** provides excellent flexibility and good abrasion resistance, and can be ordered with slip knot fittings for easy installation on any size cable.

### How To Order

| Sample Part Number | 667-217 | -M | -G | 9 | 04 | -6 |
|---|---|---|---|---|---|---|
| **Series (See Table I)** | **667-217** = Plug Cover<br>**667-218** = Receptacle Cover | | | | | |
| **Material and Finish** | **C** = Aluminum / Black Anodize (Non-Conductive) RoHS Compliant<br>**M** = Aluminum / Electroless Nickel RoHS Compliant<br>**MT** = Aluminum / Nickel-PTFE RoHS Compliant<br>**NF** = Aluminum / Cadmium with Olive Drab Chromate<br>**ZNU** = Aluminum / Zinc-Nickel with Black Chromate<br>**Z1** = Stainless Steel / Passivated RoHS Compliant | | | | | |
| **Attachment Type** | **-D** = Bead Chain, CRES, Passivate<br>**-F** = Wire Rope, Nylon Jacket<br>**-G** = Nylon Rope<br>**-H** = SST Wire Rope, Fluoropolymer Jacket<br>**-N** = No Attachment<br>**-R** = Wire Rope, PVC Jacket<br>**-S** = SST Sash Chain<br>**-SK** = Nylon Rope With Slip Knot<br>**-T** = SST Wire Rope, No Jacket<br>**-U** = SST Wire Rope, Polyurethane Jacket<br>"SST" = Stainless Steel | | | | | |
| **Shell Size** | **5, 6, 7,8, 9, 10, 11, 13, 16, 17, 19, 21** | | | | | |
| **Attachment Code (See Table II)** | Small Ring = **01** thru **06** Split Ring = **50** thru **68**<br>Solid Ring = **14** thru **33** | | | | | |
| **Attachment Length (inches)** | Omit for attachment Type N (No Attachment) Example "-6" equals six inch length | | | | | |

### Table I: Cover Style

| 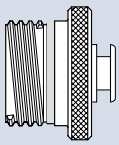 | 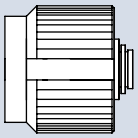 |
|---|---|
| **667-217**<br>Plug Cover | **667-218**<br>Receptacle Cover |

### Table II: Attachment Code

Omit for attachment types **N** (No Attachment) and **SK** (Slip Knot)

| | |
|---|---|
| Small Ring ± .010 I.D. tolerance | **01** – .126 (3.20) I.D.<br>**02** – .145 (3.68) I.D.<br>**04** – .188 (4.78) I.D.<br>**06** – .197 (5.00) I.D. |
| 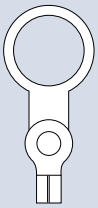 Large Ring ± .015 I.D. tolerance | **32** – .265 (.37) I.D.<br>**29** – .315 (8.00) I.D.<br>**14** – .385 (9.78) I.D.<br>**15** – .445 (11.30) I.D.<br>**33** – .510 (12.95) I.D.<br>**16** – .570 (14.48) I.D.<br>**17** – .635 (16.13) I.D.<br>**18** – .695 (17.65) I.D.<br>**27** – .766 (.89) I.D.<br>**19** – .885 (22.48) I.D.<br>**26** – .950 (24.13) I.D.<br>**20** – 1.070 (27.17) I.D.<br>**21** – 1.135 (28.83) I.D.<br>**22** – 1.210 (30.73) I.D.<br>**23** – 1.275 (32.39) I.D.<br>**30** – 1.380 (35.05) I.D. |
| 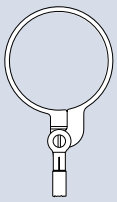 Split Ring | **50** – .432 (11.00) I.D.<br>**52** – .492 (12.50) I.D.<br>**54** – .648 (16.50) I.D.<br>**56** – .757 (19.20) I.D.<br>**58** – .898 (22.80) I.D.<br>**60** – 1.023 (26.00) I.D.<br>**64** – 1.137 (28.90) I.D.<br>**68** – 1.357 (34.50) I.D. |

Dimensions in Inches (millimeters) are subject to change without notice.

© 2014 Glenair, Inc.


GLENAIR, INC. • 1211 AIR WAY • GLENDALE, CA 91201-2497 • 818-247-6000 • FAX 818-500-9912
www.glenair.com E-Mail: sales@glenair.com

# Series 801 Mighty Mouse
# Double-Start ACME Thread Metal Protective Cover
## 667-217 and 667-218 Dimensions

### 667-218 Cover Attachment for RPM Jam Nut Receptacle

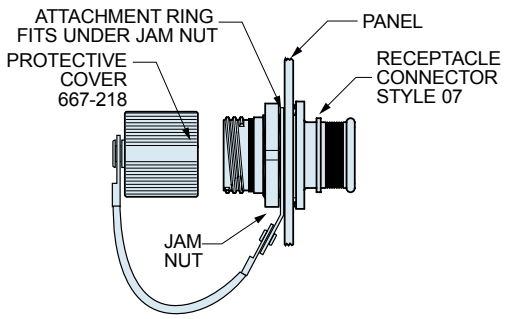


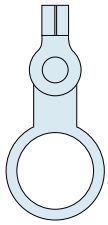

Solid Ring

| Attch. Code | Shell Size | Ring I.D. In. ± .015 | Ring I.D. mm. ±0.25 | Ring O.D. In. ± .015 | Ring O.D. mm. ± 0.38 |
|---|---|---|---|---|---|
| 14 | 5 | .385 | 9.78 | .51 | 12.95 |
| 15 | 6 | .445 | 11.30 | .57 | 14.35 |
| 16 | 7, 8 | .570 | 14.48 | .69 | 17.40 |
| 17 | 9 | .635 | 16.13 | .76 | 19.30 |
| 18 | 10 | .695 | 17.65 | .82 | 20.82 |
| 27 | 11 | .766 | 19.46 | .89 | 22.61 |
| 19 | 13 | .885 | 22.48 | 1.01 | 25.65 |
| 20 | 16 | 1.070 | 27.17 | 1.20 | 30.35 |
| 21 | 17 | 1.135 | 28.83 | 1.25 | 31.75 |
| 23 | 19 | 1.275 | 30.734 | 1.37 | 33.27 |
| 30 | 21 | 1.380 | 35.05 | 1.52 | 37.85 |

### 667-218 Cover Attachment to a Panel with a Screw

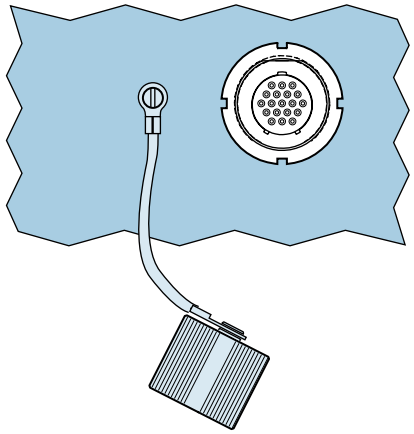

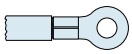

Small Ring for Attaching Receptacle Covers to a Panel with a Screw

| Attch. Code | Screw Size | Ring I.D. In. ±.010 | Ring I.D. mm. ±0.13 | Ring O.D. In. Max. | Ring O.D. mm. Max. |
|---|---|---|---|---|---|
| 01 | #4, M3 | .126 | 3.20 | .31 | 7.9 |
| 02 | #6 | .145 | 3.68 | .31 | 7.9 |
| 04 | #8, M4 | .188 | 4.78 | .31 | 7.9 |
| 06 | #10 | .197 | 5.00 | .31 | 7.9 |

### 667-217 Cover Attachment to Cable

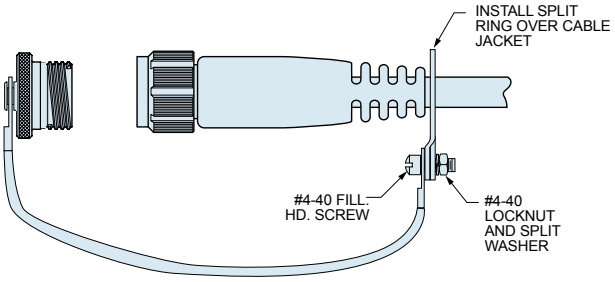


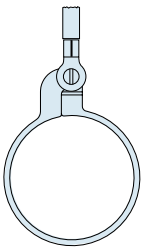

Large Split Ring for Attaching Covers to Cables

| Attch. Code | Max. Cable Dia. (in.) | Ring Diameter Min. ID In. | Ring Diameter Min. ID mm. | Ring Diameter Max. OD In. | Ring Diameter Max. OD mm. |
|---|---|---|---|---|---|
| 50 | .410 | .420 | 10.67 | .580 | 14.73 |
| 52 | .470 | .480 | 12.19 | .640 | 16.26 |
| 54 | .625 | .635 | 16.13 | .796 | 20.22 |
| 56 | .735 | .745 | 18.92 | .905 | 22.99 |
| 58 | .875 | .885 | 22.48 | 1.046 | 26.57 |
| 60 | 1.000 | 1.010 | 25.65 | 1.171 | 29.74 |
| 64 | 1.115 | 1.125 | 28.58 | 1.285 | 32.64 |
| 68 | 1.335 | 1.345 | 34.16 | 1.505 | 38.23 |

### 667-217 Cover Attachment to Cable Assembly

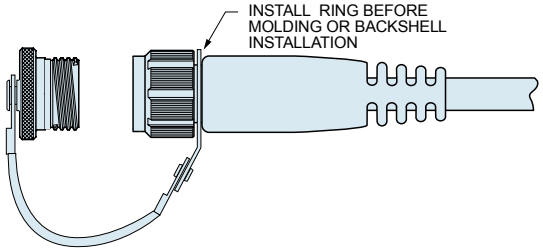


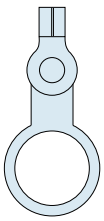

Solid Ring

| Attch. Code | Shell Size | Ring I.D. In. ± .015 | Ring I.D. mm. ±0.25 | Ring O.D. In. ± .015 | Ring O.D. mm. ± 0.38 |
|---|---|---|---|---|---|
| 29 | 5 | .315 | 8.00 | .44 | 11.18 |
| 14 | 6 | .385 | 9.78 | .51 | 12.95 |
| 33 | 7,8 | .510 | 12.95 | .62 | 15.75 |
| 16 | 9 | .570 | 14.48 | .69 | 17.53 |
| 17 | 10 | .635 | 16.13 | .76 | 19.30 |
| 18 | 11,13 | .695 | 17.65 | .82 | 20.83 |
| 26 | 16,17 | .950 | 24.13 | 1.14 | 28.96 |
| 20 | 19 | 1.070 | 27.18 | 1.20 | 30.48 |
| 22 | 21 | 1.210 | 30.73 | 1.31 | 33.27 |

Dimensions in Inches (millimeters) are subject to change without notice.

© 2014 Glenair, Inc. 

GLENAIR, INC. • 1211 AIR WAY • GLENDALE, CA 91201-2497 • 818-247-6000 • FAX 818-500-9912
www.glenair.com E-Mail: sales@glenair.com

# Series 801 Mighty Mouse
# Double-Start ACME Thread Metal Protective Cover
## 667-217 and 667-218 Dimensions

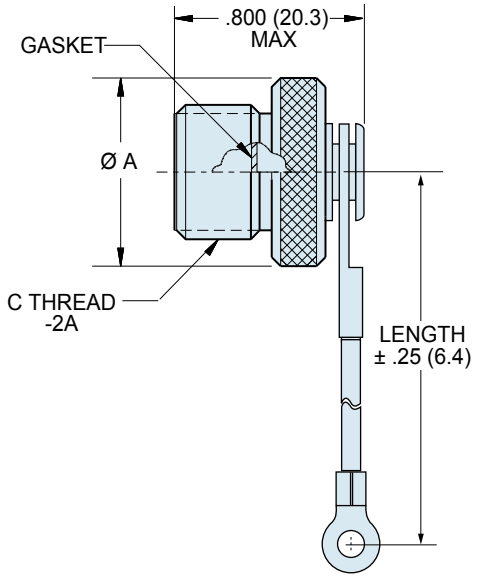


***667-217 Plug Cover***

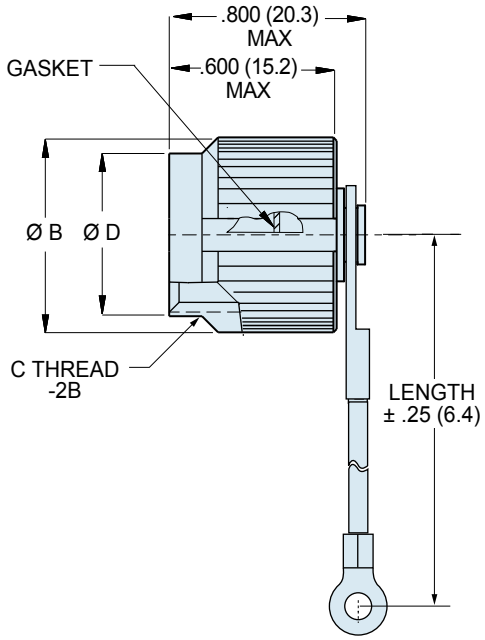


***667-218 Receptacle Cover***

| Dimensions | | | | | | | |
|---|---|---|---|---|---|---|---|
| Shell Size | Ø A Max. | | Ø B Max. | | Ø D Max. ±.015 (0.38) | | C Thread |
| | In. | mm. | In. | mm. | In. | mm. | |
| 5 | .465 | 11.8 | .488 | 12.40 | .368 | 9.3 | .3125-.05P-.1L |
| 6 | .525 | 13.3 | .555 | 14.10 | .453 | 11.5 | .375-.05P-.1L |
| 7 | .590 | 14.9 | .615 | 15.62 | .538 | 13.7 | .4375-.05P-.1L |
| 8 | .653 | 16.6 | .675 | 17.15 | .587 | 14.9 | .5000-.05-.1L |
| 9 | .715 | 18.0 | .840 | 21.34 | .648 | 16.5 | .5625-.05P-.1L |
| 10 | .778 | 19.7 | .905 | 22.95 | .712 | 18.1 | .6250-.05P-.1L |
| 11 | .840 | 21.3 | 948 | 24.1 | .778 | 19.8 | .6875-.05P-.1L |
| 13 | .965 | 24.4 | .995 | 25.27 | .904 | 22.9 | .8125-.1P-.2L |
| 16 | 1.150 | 29.2 | 1.261 | 32.03 | 1.092 | 27.7 | 1.000-.1P-.2L |
| 17 | 1.215 | 30.8 | 1.321 | 33.55 | 1.158 | 29.4 | 1.062-.1P-.2L |
| 19 | 1.340 | 34.0 | 1.447 | 36.8 | 1.283 | 32.6 | 1.1875-.1P-.2L |
| 21 | 1.477 | 37.5 | 1.570 | 39.88 | 1.412 | 35.8 | 1.3125-.1P-.2L |

| Lanyard Options | |
|---|---|
| Nylon Rope | -65° to +100°C., black, very flexible, very good abrasion resistance, good resistance to fuels, .120" (3mm) diameter |
| Polyurethane Coated Wire Rope | Black polyurethane over stainless steel rope, -65° to +125°C., very flexible, excellent abrasion resistance, excellent resistance to fuels, .080" (2mm) diameter |
| Fluoropolymer Jacketed Wire Rope | Translucent FEP jacket over stainless steel, -65° to +200°C., fair flexibility, good abrasion resistance, .100" diameter |
| Sash Chain | Stainless steel, #8 chain, .240" (6mm) |
| Slip Knot (SK) for Attaching Covers to Cable | 65° to +100°C., black, very flexible, very good abrasion resistance, good resistance to fuels, .120" (3mm) diameter. Length includes .5" (13mm) diameter loop. |

## NOTES

*Materials and Finishes*

1. Cover: Aluminum alloy or stainless steel
2. Gasket: Fluorosilicone rubber
3. Wire,Hardware: Stainless steel, passivated

Dimensions in Inches (millimeters) are subject to change without notice.

© 2014 Glenair, Inc. 

GLENAIR, INC. • 1211 AIR WAY • GLENDALE, CA 91201-2497 • 818-247-6000 • FAX 818-500-9912
www.glenair.com E-Mail: sales@glenair.com