Series 801 Mighty Mouse
Double-Start ACME Thread Metal Protective Cover
667-217 and 667-218 Ordering Information

Protect Connectors From Damage
Machined aluminum covers have rubber gaskets for a watertight fit.

Stainless Steel Fittings and Rings
Choose small diameter eye fittings for panel attachment. Larger rings fit under the jam nut or over cable jackets. Split rings can be installed on fully assembled cables.

Polyurethane-Coated SST Wire Rope offers high strength, excellent abrasion resistance and good flexibility. Or, choose Fluoropolymer jacket for high temperature exposure.

Braided Nylon Rope provides excellent flexibility and good abrasion resistance, and can be ordered with slip knot fittings for easy installation on any size cable.

How To Order

Sample Part Number	667-217	-M	-G	9	04	-6
Series (See Table I)	**667-217** = Plug Cover **667-218** = Receptacle Cover					
Material and Finish	**C** = Aluminum / Black Anodize (Non-Conductive) RoHS Compliant **M** = Aluminum / Electroless Nickel RoHS Compliant **MT** = Aluminum / Nickel-PTFE RoHS Compliant **NF** = Aluminum / Cadmium with Olive Drab Chromate **ZNU** = Aluminum / Zinc-Nickel with Black Chromate **Z1** = Stainless Steel / Passivated RoHS Compliant					
Attachment Type	**-D** = Bead Chain, CRES, Passivate **-F** = Wire Rope, Nylon Jacket **-G** = Nylon Rope **-H** = SST Wire Rope, Fluoropolymer Jacket **-N** = No Attachment **-R** = Wire Rope, PVC Jacket **-S** = SST Sash Chain **-SK** = Nylon Rope With Slip Knot **-T** = SST Wire Rope, No Jacket **-U** = SST Wire Rope, Polyurethane Jacket "SST" = Stainless Steel					
Shell Size	**5, 6, 7,8, 9, 10, 11, 13, 16, 17, 19, 21**					
Attachment Code (See Table II)	Small Ring = **01** thru **06** Split Ring = **50** thru **68** Solid Ring = **14** thru **33**					
Attachment Length (inches)	Omit for attachment Type N (No Attachment) Example "-6" equals six inch length					

Table I: Cover Style

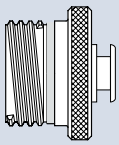	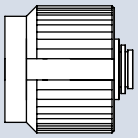
667-217 Plug Cover	**667-218** Receptacle Cover

Table II: Attachment Code

Omit for attachment types **N** (No Attachment) and **SK** (Slip Knot)

Small Ring ± .010 I.D. tolerance	**01** – .126 (3.20) I.D. **02** – .145 (3.68) I.D. **04** – .188 (4.78) I.D. **06** – .197 (5.00) I.D.
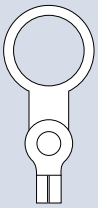 Large Ring ± .015 I.D. tolerance	**32** – .265 (.37) I.D. **29** – .315 (8.00) I.D. **14** – .385 (9.78) I.D. **15** – .445 (11.30) I.D. **33** – .510 (12.95) I.D. **16** – .570 (14.48) I.D. **17** – .635 (16.13) I.D. **18** – .695 (17.65) I.D. **27** – .766 (.89) I.D. **19** – .885 (22.48) I.D. **26** – .950 (24.13) I.D. **20** – 1.070 (27.17) I.D. **21** – 1.135 (28.83) I.D. **22** – 1.210 (30.73) I.D. **23** – 1.275 (32.39) I.D. **30** – 1.380 (35.05) I.D.
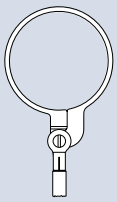 Split Ring	**50** – .432 (11.00) I.D. **52** – .492 (12.50) I.D. **54** – .648 (16.50) I.D. **56** – .757 (19.20) I.D. **58** – .898 (22.80) I.D. **60** – 1.023 (26.00) I.D. **64** – 1.137 (28.90) I.D. **68** – 1.357 (34.50) I.D.

Dimensions in Inches (millimeters) are subject to change without notice.

© 2014 Glenair, Inc.

GLENAIR, INC. • 1211 AIR WAY • GLENDALE, CA 91201-2497 • 818-247-6000 • FAX 818-500-9912
www.glenair.com E-Mail: sales@glenair.com

Series 801 Mighty Mouse
Double-Start ACME Thread Metal Protective Cover
667-217 and 667-218 Dimensions

667-218 Cover Attachment for RPM Jam Nut Receptacle

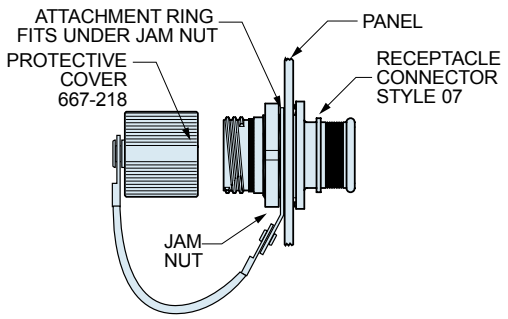

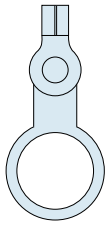

Solid Ring

Attch. Code	Shell Size	Ring I.D. In. ± .015	Ring I.D. mm. ±0.25	Ring O.D. In. ± .015	Ring O.D. mm. ± 0.38
14	5	.385	9.78	.51	12.95
15	6	.445	11.30	.57	14.35
16	7, 8	.570	14.48	.69	17.40
17	9	.635	16.13	.76	19.30
18	10	.695	17.65	.82	20.82
27	11	.766	19.46	.89	22.61
19	13	.885	22.48	1.01	25.65
20	16	1.070	27.17	1.20	30.35
21	17	1.135	28.83	1.25	31.75
23	19	1.275	30.734	1.37	33.27
30	21	1.380	35.05	1.52	37.85

667-218 Cover Attachment to a Panel with a Screw

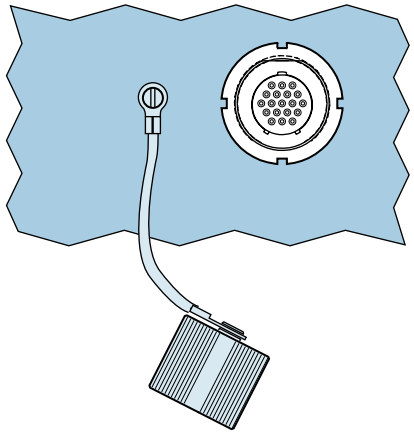

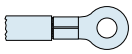

Small Ring for Attaching Receptacle Covers to a Panel with a Screw

Attch. Code	Screw Size	Ring I.D. In. ±.010	Ring I.D. mm. ±0.13	Ring O.D. In. Max.	Ring O.D. mm. Max.
01	#4, M3	.126	3.20	.31	7.9
02	#6	.145	3.68	.31	7.9
04	#8, M4	.188	4.78	.31	7.9
06	#10	.197	5.00	.31	7.9

667-217 Cover Attachment to Cable

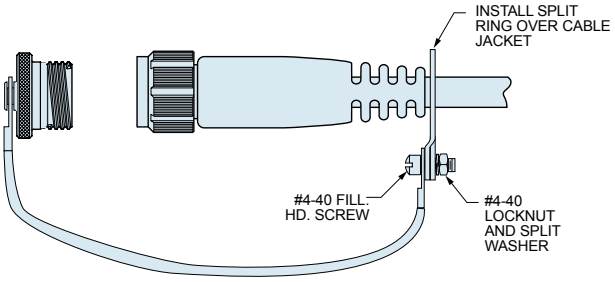

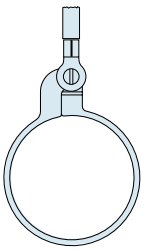

Large Split Ring for Attaching Covers to Cables

Attch. Code	Max. Cable Dia. (in.)	Ring Diameter Min. ID In.	Ring Diameter Min. ID mm.	Ring Diameter Max. OD In.	Ring Diameter Max. OD mm.
50	.410	.420	10.67	.580	14.73
52	.470	.480	12.19	.640	16.26
54	.625	.635	16.13	.796	20.22
56	.735	.745	18.92	.905	22.99
58	.875	.885	22.48	1.046	26.57
60	1.000	1.010	25.65	1.171	29.74
64	1.115	1.125	28.58	1.285	32.64
68	1.335	1.345	34.16	1.505	38.23

667-217 Cover Attachment to Cable Assembly

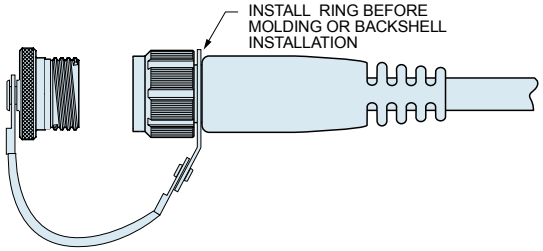

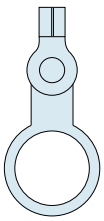

Solid Ring

Attch. Code	Shell Size	Ring I.D. In. ± .015	Ring I.D. mm. ±0.25	Ring O.D. In. ± .015	Ring O.D. mm. ± 0.38
29	5	.315	8.00	.44	11.18
14	6	.385	9.78	.51	12.95
33	7,8	.510	12.95	.62	15.75
16	9	.570	14.48	.69	17.53
17	10	.635	16.13	.76	19.30
18	11,13	.695	17.65	.82	20.83
26	16,17	.950	24.13	1.14	28.96
20	19	1.070	27.18	1.20	30.48
22	21	1.210	30.73	1.31	33.27

Dimensions in Inches (millimeters) are subject to change without notice.

© 2014 Glenair, Inc.

GLENAIR, INC. • 1211 AIR WAY • GLENDALE, CA 91201-2497 • 818-247-6000 • FAX 818-500-9912
www.glenair.com E-Mail: sales@glenair.com

Series 801 Mighty Mouse
Double-Start ACME Thread Metal Protective Cover
667-217 and 667-218 Dimensions

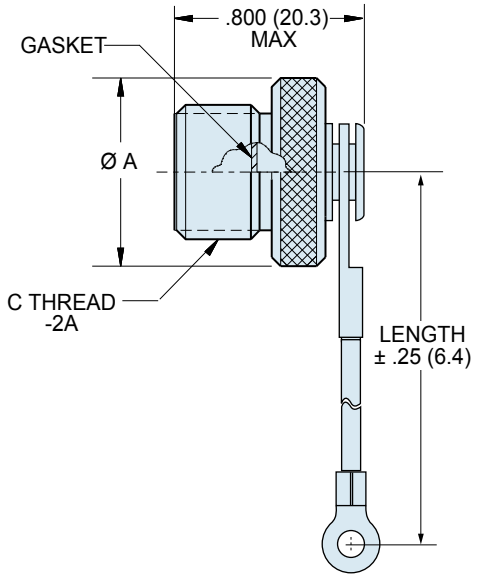

667-217 Plug Cover

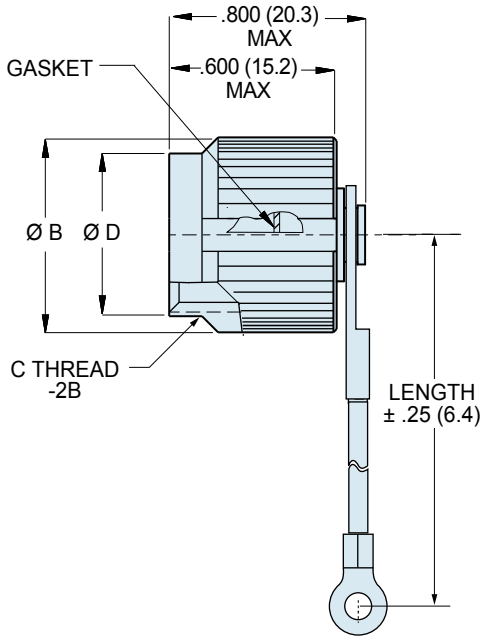

667-218 Receptacle Cover

Dimensions							
Shell Size	Ø A Max.		Ø B Max.		Ø D Max. ±.015 (0.38)		C Thread
	In.	mm.	In.	mm.	In.	mm.	
5	.465	11.8	.488	12.40	.368	9.3	.3125-.05P-.1L
6	.525	13.3	.555	14.10	.453	11.5	.375-.05P-.1L
7	.590	14.9	.615	15.62	.538	13.7	.4375-.05P-.1L
8	.653	16.6	.675	17.15	.587	14.9	.5000-.05-.1L
9	.715	18.0	.840	21.34	.648	16.5	.5625-.05P-.1L
10	.778	19.7	.905	22.95	.712	18.1	.6250-.05P-.1L
11	.840	21.3	948	24.1	.778	19.8	.6875-.05P-.1L
13	.965	24.4	.995	25.27	.904	22.9	.8125-.1P-.2L
16	1.150	29.2	1.261	32.03	1.092	27.7	1.000-.1P-.2L
17	1.215	30.8	1.321	33.55	1.158	29.4	1.062-.1P-.2L
19	1.340	34.0	1.447	36.8	1.283	32.6	1.1875-.1P-.2L
21	1.477	37.5	1.570	39.88	1.412	35.8	1.3125-.1P-.2L

Lanyard Options	
Nylon Rope	-65° to +100°C., black, very flexible, very good abrasion resistance, good resistance to fuels, .120" (3mm) diameter
Polyurethane Coated Wire Rope	Black polyurethane over stainless steel rope, -65° to +125°C., very flexible, excellent abrasion resistance, excellent resistance to fuels, .080" (2mm) diameter
Fluoropolymer Jacketed Wire Rope	Translucent FEP jacket over stainless steel, -65° to +200°C., fair flexibility, good abrasion resistance, .100" diameter
Sash Chain	Stainless steel, #8 chain, .240" (6mm)
Slip Knot (SK) for Attaching Covers to Cable	65° to +100°C., black, very flexible, very good abrasion resistance, good resistance to fuels, .120" (3mm) diameter. Length includes .5" (13mm) diameter loop.

NOTES

Materials and Finishes

1. Cover: Aluminum alloy or stainless steel
2. Gasket: Fluorosilicone rubber
3. Wire,Hardware: Stainless steel, passivated

Dimensions in Inches (millimeters) are subject to change without notice.

© 2014 Glenair, Inc.

GLENAIR, INC. • 1211 AIR WAY • GLENDALE, CA 91201-2497 • 818-247-6000 • FAX 818-500-9912
www.glenair.com E-Mail: sales@glenair.com