MA Series

Microminiature Memory Card Slide Switches

SPECIFICATIONS

Contact rating: 300 mA at 4 VDC
Initial contact resistance: 70 milliohms max.
Insulation resistance: 100 megohms min. at 100 VDC
Dielectric strength: 100 VAC for 1 minute
Electrical life: 10,000 cycles min.
Operating temperature range: -10°C to +60°C
Actuation force: 200g ± 100g
Solder heat resistance: Reflow - 260°C max. for 1 min.
Manual - iron temperature
305 °C max. for 6 seconds.
Washing not recommended

FEATURES

- **Ultra-compact size.**
- **Low Profile.**
- **Surface mounting with restraining bosses.**
- **Reflow or hand solderable.**

MATERIALS

Contacts: Silver plated beryllium copper
Terminals: Silver plated brass
Base: Liquid crystal polymer **Cover:** Tin plated steel
Actuator: Liquid crystal polymer

O

MODEL NO.

MA12R

RIGHT ANGLE ACTUATOR

1P2T

SCHEMATIC

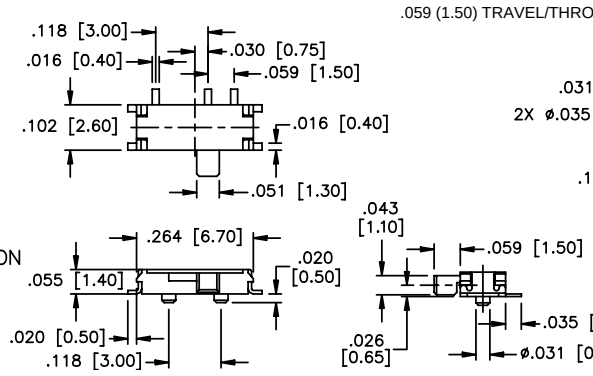

MECHANICAL OUTLINE

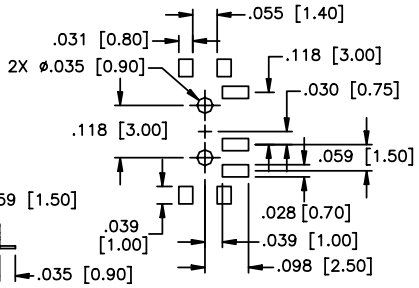

P.C. BOARD LAYOUT

MODEL NO.

MA12R/TR
MA13R/TR

Same as above models except supplied on tape & reel as shown.

Model No.	Dim. A	Dim. B	Dim. C
MA12RTR	.630 (16.0)	.217 (5.5)	.646 (16.4)
MA13R/TR	.945 (24.0)	.453 (11.5)	.960 (24.4)

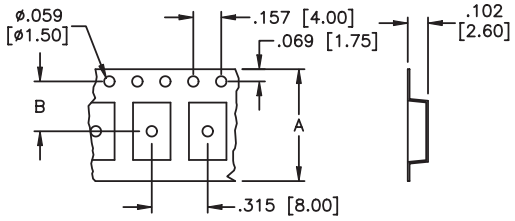

CARRIER TAPE

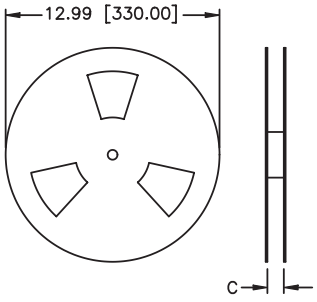

REEL DIMENSIONS

SPECIFICATIONS SUBJECT TO CHANGE WITHOUT NOTICE

APEM, PO BOX 8288, HAVERHILL, MA USA 01835-0788 TOLL FREE: (877) 246-7890 FAX: (978) 372-3534 E-mail: info@apem.com