AS85049/21
Straight Non-Environmental Strain Relief Backshell

CONNECTOR DESIGNATOR:	
H	MIL-DTL-38999 Series III and IV EN3645

Basic Part Number	Shell Size		Clamp Size	
M85049/21	11	A	02	A

Finish
- *A = Black Anodize*
- *N = Electroless Nickel*
- *W = Cadmium, Olive Drab*
- *X = Nickel Fluorocarbon Polymer*
- *Y = Pure Dense Electrodeposited Aluminum*
- *Z = Zinc Nickel*

Length Code
(Omit for Standard)
Table III

TABLE III: Length Code

Code	Length ± .032 (0.8)
Standard	1.50 (38.1)
A	2.50 (63.5)
B	3.50 (88.9)
C	4.50 (114.3)

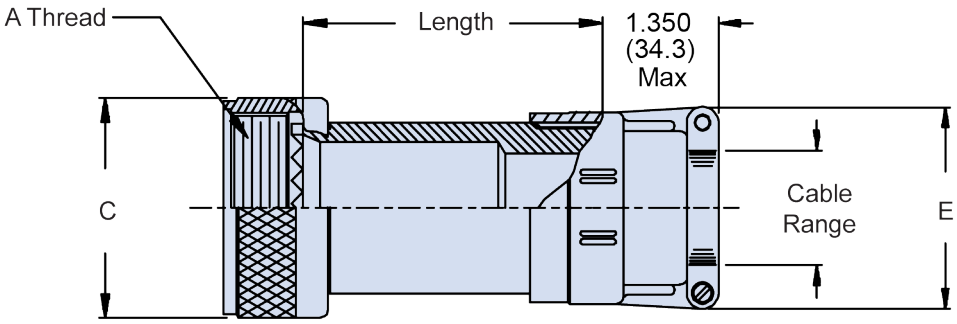

TABLE I: Shell Size, Clamp Size and Dimensions

Shell Size	Clamp Size* Min	Clamp Size* Max	A Thread Class 6H	C Dia Max
9	01	02	M12 X 1 - 6H	.750 (19.1)
11	01	03	M15 X 1 - 6H	.850 (21.6)
13	02	04	M18 X 1 - 6H	1.000 (25.4)
15	02	05	M22 X 1 - 6H	1.100 (27.9)
17	02	06	M25 X 1 - 6H	1.250 (31.8)
19	03	07	M28 X 1 - 6H	1.400 (35.6)
21	03	08	M31 X 1 - 6H	1.500 (38.1)
23	03	09	M34 X 1 - 6H	1.650 (41.9)
25	04	10	M37 X 1 - 6H	1.750 (44.5)

*Clamp Size from Table IV, AS85049/21 Specifications.

TABLE II: Clamp Size, Cable Range and Dimensions

Clamp Size	Cable Range Min	Cable Range Max	E Max
01	.062 (1.6)	.125 (3.2)	.800 (20.3)
02	.125 (3.2)	.250 (6.4)	1.000 (25.4)
03	.250 (6.4)	.375 (9.5)	1.100 (27.9)
04	.312 (7.9)	.500 (12.7)	1.200 (30.5)
05	.437 (11.1)	.625 (15.9)	1.250 (31.8)
06	.562 (14.3)	.750 (19.1)	1.400 (35.6)
07	.687 (17.4)	.875 (22.2)	1.500 (38.1)
08	.812 (20.6)	1.000 (25.4)	1.650 (41.9)
09	.937 (23.8)	1.125 (28.6)	1.750 (44.5)
10	1.062 (27.0)	1.250 (31.8)	1.900 (48.3)

APPLICATION NOTES

1. For complete dimensions see the applicable Military Specification.
2. Metric dimensions (mm) are in parentheses.
3. Cable Range is defined as the accommodation range for the wire bundle or cable. Dimensions shown are not intended for inspection criteria.

Dimensions in inches (millimeters) and are subject to change without notice.

© 2013 Glenair, Inc.
U.S. CAGE Code 06324
Printed in U.S.A.