# AS85049/21
# Straight Non-Environmental Strain Relief Backshell

| CONNECTOR DESIGNATOR: | |
|---|---|
| H | MIL-DTL-38999 Series III and IV<br>EN3645 |

| Basic Part Number | Shell Size | | Clamp Size | |
|---|---|---|---|---|
| M85049/21 | 11 | A | 02 | A |

**Finish**
- *A = Black Anodize*
- *N = Electroless Nickel*
- *W = Cadmium, Olive Drab*
- *X = Nickel Fluorocarbon Polymer*
- *Y = Pure Dense Electrodeposited Aluminum*
- *Z = Zinc Nickel*

**Length Code**
*(Omit for Standard)*
*Table III*



**TABLE III: Length Code**

| Code | Length ± .032 (0.8) |
|---|---|
| Standard | 1.50 (38.1) |
| A | 2.50 (63.5) |
| B | 3.50 (88.9) |
| C | 4.50 (114.3) |

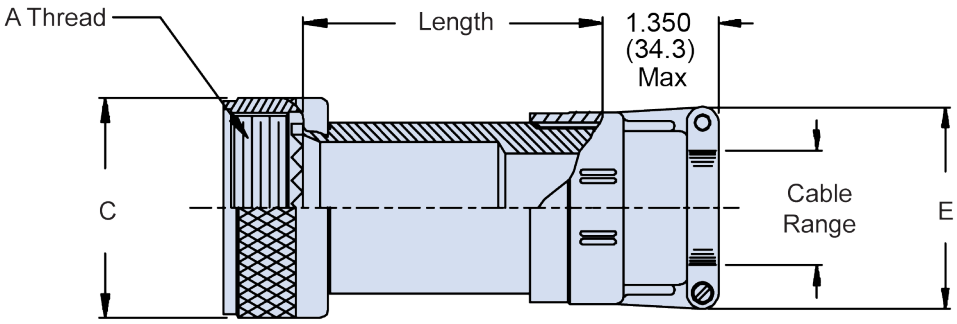


**TABLE I: Shell Size, Clamp Size and Dimensions**

| Shell Size | Clamp Size* Min | Clamp Size* Max | A Thread Class 6H | C Dia Max |
|---|---|---|---|---|
| 9 | 01 | 02 | M12 X 1 - 6H | .750 (19.1) |
| 11 | 01 | 03 | M15 X 1 - 6H | .850 (21.6) |
| 13 | 02 | 04 | M18 X 1 - 6H | 1.000 (25.4) |
| 15 | 02 | 05 | M22 X 1 - 6H | 1.100 (27.9) |
| 17 | 02 | 06 | M25 X 1 - 6H | 1.250 (31.8) |
| 19 | 03 | 07 | M28 X 1 - 6H | 1.400 (35.6) |
| 21 | 03 | 08 | M31 X 1 - 6H | 1.500 (38.1) |
| 23 | 03 | 09 | M34 X 1 - 6H | 1.650 (41.9) |
| 25 | 04 | 10 | M37 X 1 - 6H | 1.750 (44.5) |

*Clamp Size from Table IV, AS85049/21 Specifications.

**TABLE II: Clamp Size, Cable Range and Dimensions**

| Clamp Size | Cable Range Min | Cable Range Max | E Max |
|---|---|---|---|
| 01 | .062 (1.6) | .125 (3.2) | .800 (20.3) |
| 02 | .125 (3.2) | .250 (6.4) | 1.000 (25.4) |
| 03 | .250 (6.4) | .375 (9.5) | 1.100 (27.9) |
| 04 | .312 (7.9) | .500 (12.7) | 1.200 (30.5) |
| 05 | .437 (11.1) | .625 (15.9) | 1.250 (31.8) |
| 06 | .562 (14.3) | .750 (19.1) | 1.400 (35.6) |
| 07 | .687 (17.4) | .875 (22.2) | 1.500 (38.1) |
| 08 | .812 (20.6) | 1.000 (25.4) | 1.650 (41.9) |
| 09 | .937 (23.8) | 1.125 (28.6) | 1.750 (44.5) |
| 10 | 1.062 (27.0) | 1.250 (31.8) | 1.900 (48.3) |

**APPLICATION NOTES**

1. For complete dimensions see the applicable Military Specification.
2. Metric dimensions (mm) are in parentheses.
3. Cable Range is defined as the accommodation range for the wire bundle or cable. Dimensions shown are not intended for inspection criteria.

Dimensions in inches (millimeters) and are subject to change without notice.

© 2013 Glenair, Inc.
U.S. CAGE Code 06324
Printed in U.S.A.