56x

Infrared Thermometers

Users Manual

August 2010

©2010 Fluke Corporation, All rights reserved. Specifications are subject to change without notice.
All product names are trademarks of their respective companies.

LIMITED WARRANTY AND LIMITATION OF LIABILITY

Each Fluke product is warranted to be free from defects in material and workmanship under normal use and service. The warranty period is two years and begins on the date of shipment. Parts, product repairs, and services are warranted for 90 days. This warranty extends only to the original buyer or end-user customer of a Fluke authorized reseller, and does not apply to fuses, disposable batteries, or to any product which, in Fluke's opinion, has been misused, altered, neglected, contaminated, or damaged by accident or abnormal conditions of operation or handling. Fluke warrants that software will operate substantially in accordance with its functional specifications for 90 days and that it has been properly recorded on non-defective media. Fluke does not warrant that software will be error free or operate without interruption.

Fluke authorized resellers shall extend this warranty on new and unused products to end-user customers only but have no authority to extend a greater or different warranty on behalf of Fluke. Warranty support is available only if product is purchased through a Fluke authorized sales outlet or Buyer has paid the applicable international price. Fluke reserves the right to invoice Buyer for importation costs of repair/replacement parts when product purchased in one country is submitted for repair in another country.

Fluke's warranty obligation is limited, at Fluke's option, to refund of the purchase price, free of charge repair, or replacement of a defective product which is returned to a Fluke authorized service center within the warranty period.

To obtain warranty service, contact your nearest Fluke authorized service center to obtain return authorization information, then send the product to that service center, with a description of the difficulty, postage and insurance prepaid (FOB Destination). Fluke assumes no risk for damage in transit. Following warranty repair, the product will be returned to Buyer, transportation prepaid (FOB Destination). If Fluke determines that failure was caused by neglect, misuse, contamination, alteration, accident, or abnormal condition of operation or handling, including overvoltage failures caused by use outside the product’s specified rating, or normal wear and tear of mechanical components, Fluke will provide an estimate of repair costs and obtain authorization before commencing the work. Following repair, the product will be returned to the Buyer transportation prepaid and the Buyer will be billed for the repair and return transportation charges (FOB Shipping Point).

THIS WARRANTY IS BUYER'S SOLE AND EXCLUSIVE REMEDY AND IS IN LIEU OF ALL OTHER WARRANTIES, EXPRESS OR IMPLIED, INCLUDING BUT NOT LIMITED TO ANY IMPLIED WARRANTY OF MERCHANTABILITY OR FITNESS FOR A PARTICULAR PURPOSE. FLUKE SHALL NOT BE LIABLE FOR ANY SPECIAL, INDIRECT, INCIDENTAL OR CONSEQUENTIAL DAMAGES OR LOSSES, INCLUDING LOSS OF DATA, ARISING FROM ANY CAUSE OR THEORY.

Since some countries or states do not allow limitation of the term of an implied warranty, or exclusion or limitation of incidental or consequential damages, the limitations and exclusions of this warranty may not apply to every buyer. If any provision of this Warranty is held invalid or unenforceable by a court or other decision-maker of competent jurisdiction, such holding will not affect the validity or enforceability of any other provision.

Fluke Corporation	Fluke Europe B.V.
P.O. Box 9090	P.O. Box 1186
Everett, WA 98206-9090	5602 BD Eindhoven
U.S.A.	The Netherlands

11/99

Table of Contents

Title	Page
Introduction	1
Contacting Fluke	1
Safety Information	2
Features	5
561 Display	6
566/568 Display	7
566/568 Menu Overview	7
Save	8
Light	8
Memory	9
Emissivity Menu	9
°C and °F	11
Min, Max, Avg, Differential	11
Alarm	12
Trigger Lock	12
Laser	12
Setup	13
Backlight	13
Time/Date	13
Language	14
Deleting Data	14
Deleting All Data	14
Deleting Individual Data Records	15
Buttons and Connector	15
How the Thermometers Work	16
Operating the Thermometer	16
Temperature Measurement	16
Locating a Hot or Cold Spot	17
Distance and Spot Size	18
Field of View	19
Emissivity	19
HOLD	19
Storing Data	20
Downloading Data	20
External Contact Probe	21
Troubleshooting	21

Maintenance 22
Battery Charge 22
Changing the Batteries 22
Cleaning the Lens 23
Cleaning the Housing 23
User Replaceable Parts and Accessories 23
User Replaceable Parts 23
Accessories 24
Recommended Temperature Probes 24
Specifications 25
561 Accessory 26
566/568 Accessory 26

List of Tables

Table	Title	Page
1.	Symbols	3
2.	Top-Level Menu Description	8
3.	Surface Emissivity (561)	10
4.	Nominal Surface Emissivity (566/568)	11
5.	Buttons and Connector	15
6.	Troubleshooting	21
7.	Replaceable Parts	23
8.	Recommended Temperature Probes	24

List of Figures

Figure	Title	Page
1.	561 Laser Safety Markings	4
2.	566/568 Laser Safety Markings	4
3.	Thermometer Display	6
4.	Menu Navigation	7
5.	How the Thermometer Works	16
6.	Locating a Hot or Cold Spot	17
7.	Distance and Spot Size	18
8.	Field of View	19
9.	Thermocouple and USB Connections	20
10.	566/568 Battery Replacement	23

Infrared Thermometers

Introduction

The 561, 566 and 568 Infrared Thermometers (“the thermometers” or “the Product”) are for non-contact temperature measurement. These thermometers determine an object’s surface temperature by measuring the amount of infrared energy radiated by the object’s surface. The thermometers also support contact-temperature measurement via K-type thermocouple.

Note that the Japanese models indicate Celsius only.

Contacting Fluke

To contact Fluke, call one of the following telephone numbers:

- Technical Support USA: 1-800-44-FLUKE (1-800-443-5853)
- Calibration/Repair USA: 1-888-99-FLUKE (1-888-993-5853)
- Canada: 1-800-36-FLUKE (1-800-363-5853)
- Europe: +31 402-675-200
- Japan: +81-3-3434-0181
- Singapore: +65-738-5655
- Anywhere in the world: +1-425-446-5500

Or, visit Fluke's website at www.fluke.com.

To register your product, visit http://register.fluke.com.

To see, print, or download the latest manual supplement, visit http://us.fluke.com/usen/support/manuals.

Safety Information

A **Warning** identifies conditions and actions that pose hazard(s) to the user; A **Caution** identifies conditions and procedures that could cause Product damage, equipment under test damage, or permanent loss of data.

Symbols used on the Product and in this manual are explained in Table 1 and Figures 1 and 2.

⚠⚠Warning

To prevent eye damage and personal injury:

- **Read all safety Information before you use the Product.**
- **Do not look directly into the laser with optical tools (for example, binoculars, telescopes, microscopes). Optical tools can focus the laser and be dangerous to the eye.**
- **Do not look into the laser. Do not point laser directly at persons or animals or indirectly off reflective surfaces.**
- **Do not use laser viewing glasses as laser protection glasses. Laser viewing glasses are used only for better visibility of the laser in bright light.**
- **Do not open the Product. The laser beam is dangerous to eyes. Have the Product repaired only through an approved technical site.**
- **Replace the batteries when the low battery indicator shows to prevent incorrect measurements.**
- **The battery door must be closed and locked before you operate the Product.**
- **Do not use the Product if it operates incorrectly.**
- **Do not use the Product around explosive gas, vapor, or in damp or wet environments.**
- **Do not connect the optional external probe to live electrical circuits.**
- **See emissivity information for actual temperatures. Reflective objects result in lower than actual temperature measurements. These objects pose a burn hazard.**
- **Do not leave the thermometer on or near objects of high temperature.**
- **Use of controls or adjustments or performance of procedures other than those specified herein may result in hazardous laser radiation exposure.**
- **Use the Product only as specified, or the protection supplied by the Product can be compromised.**

⚠Caution

To avoid damaging the thermometer or the equipment under test, protect them from the following:

- **EMF (electro-magnetic fields) from arc welders, induction heaters, etc.**
- **Static electricity**
- **Thermal shock (caused by large or abrupt ambient temperature changes- for highest accuracy, allow 30 minutes for thermometer to stabilize before use).**

Table 1. Symbols

Symbol	Explanation
⚠	Hazardous voltage. Risk of electrical shock.
⚠	Risk of danger. Important information.
⚠	Warning. Laser.
CE	Conforms to requirements of European Union and European Free Trade Association (EFTA)
°C	Celsius
°F	Fahrenheit
+	Battery
	Do not dispose of this product as unsorted municipal waste. Go to Fluke's web site for recycling information.
	Battery
MC 沪制01120009号	China metrology certification mark for measuring instruments manufactured in the Peoples Republic of China (PRC).

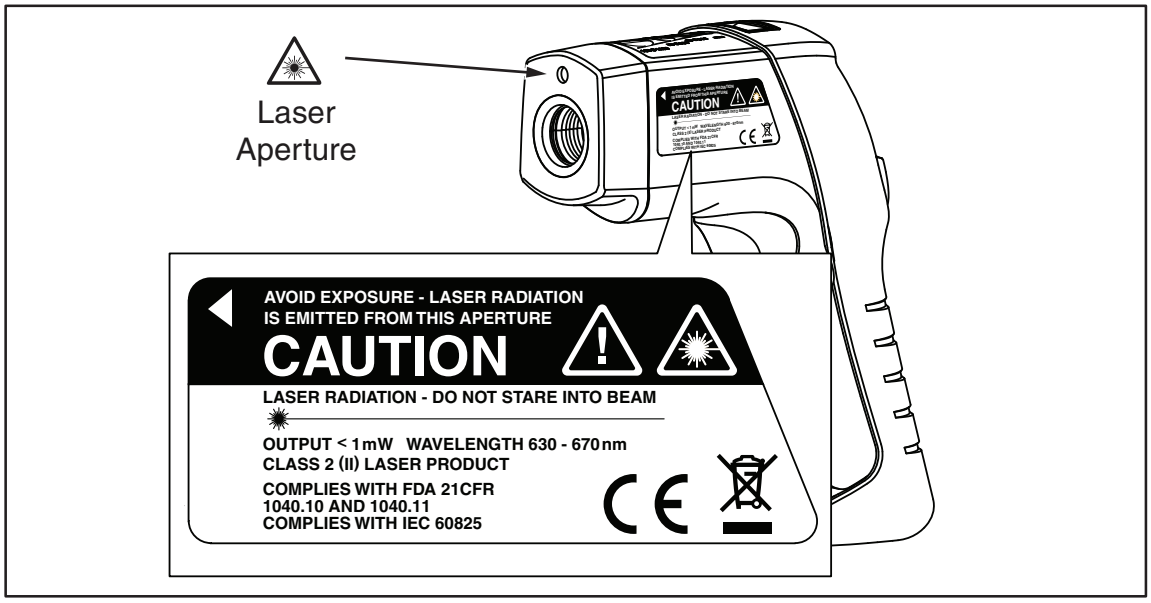

efh010f.eps

Figure 1. 561 Laser Safety Markings

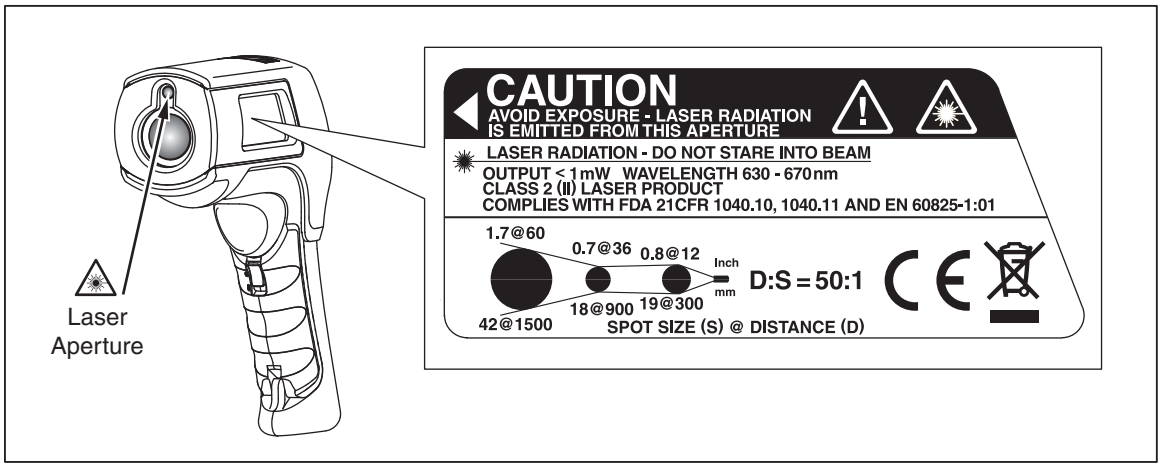

eyl08b.eps

Figure 2. 566/568 Laser Safety Markings

Features

561:

- Single-spot laser sighting
- Backlit display
- Current Temperature plus MAX, MIN, DIF, AVG temperature displays
- Two AA batteries
- Hard case
- 80PK-1 and 80PK-11 K-type thermocouple probe
- Adjustable emissivity and predefined emissivity table
- Infrared and thermocouple temperature display
- Celsius or Fahrenheit temperature display
- Tripod mount
- Auto off
- Standard miniature K-type thermocouple connector input
- Printed *56x Getting Started Guide*
- *56x Manuals CD*

566 and 568 include items listed above plus:

- 12 or 24 hour clock
- Last reading Hold (20 seconds)
- Multi-language interface
- High and low alarm
- Data storage and review
- Trigger lock
- USB 2.0 computer interface cable (568)
- FlukeView Forms Documenting Software (568)

561 Display

The primary temperature display reports the current or last IR temperature read until the 7-second hold time elapses.

The secondary temperature display reports current thermocouple temperature when a type-K thermocouple is attached. When a thermocouple is not connected, the small temperature display reports a choice of maximum, minimum, or difference between maximum and minimum temperature.

You can toggle through the minimum, maximum, and difference IR temperatures anytime the display is on. The MIN, MAX, and DIF temperatures are constantly calculated and updated when the trigger is pressed. After the trigger is released, the MIN, MAX, DIF temperatures are held for 7 seconds.

Note

When the battery is low, appears on the display.

The last selection (MIN/MAX/DIF) is maintained on the secondary display even after the Thermometer has been turned off, providing the batteries have not failed. See Figure 3.

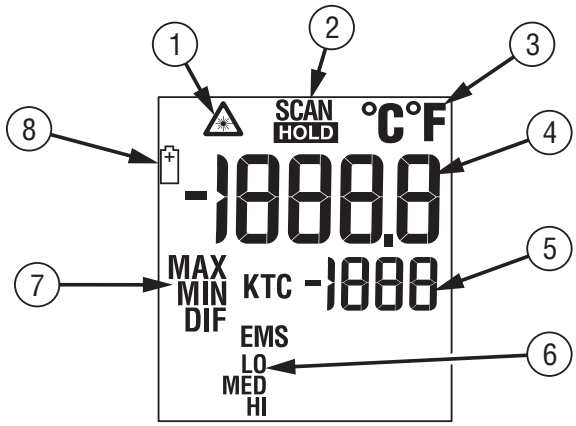

efh01af.eps

Number	Description
1	Laser “On” symbol
2	SCAN or HOLD
3	°C/°F symbol (Celsius/Fahrenheit)
4	Primary temperature display
5	Secondary temperature display
6	Emissivity LO, MED, HI
7	Temperature values for the MIN, MAX, DIF, KTC. KTC indicates the thermocouple temperature.
8	Low Battery symbol. Appears when the battery charge is <25 %.

Figure 3. 561 Thermometer Display

566/568 Display

The 566/568 thermometers display can show data in the following languages:

- English
- Spanish
- French
- German
- Portuguese
- Japanese
- Simplified Chinese

To change the displayed language, refer to “Setup”.

566/568 Menu Overview

There are many settings that can be easily changed by using the menu. Figure 4 shows the LCD and menu interface. Selecting the **Menu** softkey advances the menu to the next level. Table 2 is a top-level description of the menu.

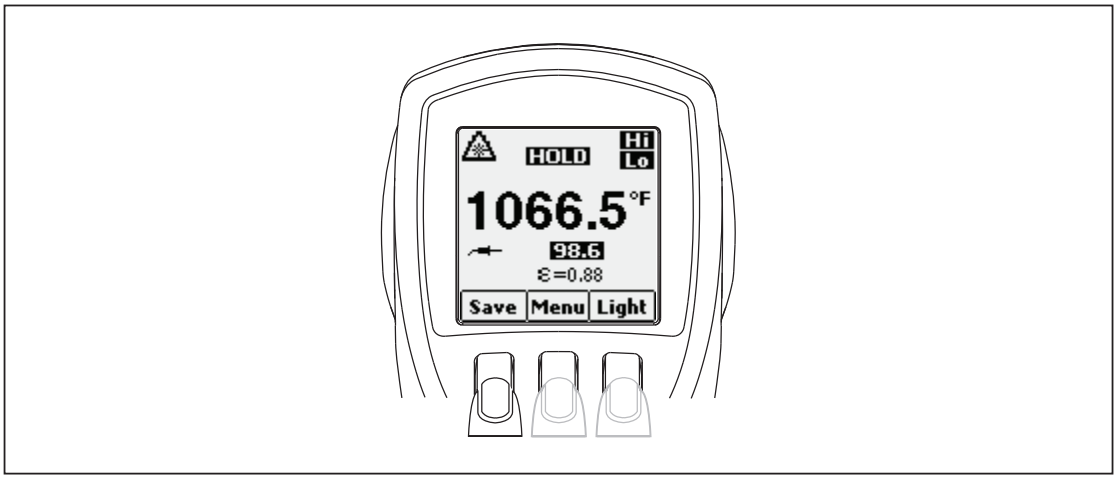

eyl01a.eps

Figure 4. Menu Navigation

Table 2. Top-Level Menu Description

Level	Left Softkey	Description	Center Softkey	Right Softkey	Description
1	**Save**	Save reading to memory	**Menu**	**Light**	Adjust backlight brightness
2	**Mem**	Review/delete memories	**Menu**	**ε**	Set emissivity
3	**MnMx**	Enables Min/Max	**Menu**	**Avg**	Enable Avg/Diff
4	**°C/°F**	Toggle between C and F	**Menu**	**Alarm**	Set and enable alarms
5	**🔒 (Lock)**	Lock the thermometer on	**Menu**	**Laser**	Toggle the laser on/off
6	**Setup**	- Turn off/on backlight - Change Time/Date - Change Language	**Menu**	**-**	-

Each menu item and function is explained in greater detail in the following sections.

Save

To save readings:

1. Pull the trigger to take a measurement.
2. Release the trigger to stop taking the measurement.
3. Press the **Save** softkey to enter the Save menu.
4. Press the **Yes** softkey to save the reading.

The reading is assigned a memory location and a time and date stamp.

The reading includes:

- IR temperature
- Thermocouple temperature (if connected)
- Emissivity
- Min/Max/Avg/Dif (if either Min/Max or Avg/Dif is enabled)
- Date/Time

You may also press the **Cancel** softkey to abort saving the reading.

Light

The thermometers are equipped with a backlit display with two brightness levels. The **Light** softkey is used to adjust the backlight brightness. The backlight is on each time the trigger is pulled.

To toggle the backlight brightness, press the **Light** softkey.

The backlight can be disabled using the Setup menu. See “Setup” for more information.

Memory

The thermometers can store measurement records including time, date, emissivity, and measurement record numbers (see “Save” for more information). The 566 can store 20 records and the 568 can store 99.

To access records stored in memory:

1. Press the **Menu** softkey until **Mem** appears as the left softkey function.
2. Press the **Mem** softkey to access the Memory menu. Saved readings can be read.

Emissivity Menu

The Emissivity menu includes a list of pre-defined materials and lists their typical emissivity values, see Tables 3 and 4. For further information, see “Emissivity”.

Note

Default emissivity is 0.95.

To access the Emissivity menu:

1. Press the **Menu** softkey until E (emissivity) appears as the right softkey function.
2. Press the E softkey.

The Emissivity list may be accessed by pressing the **Table** softkey or a material’s typical emissivity may be entered manually by pressing the **No.** softkey.

- If the Emissivity table is accessed, a listing of materials and their suggested emissivity is shown.
    1. Use the down arrow to navigate through the list.
    2. Press the **Enter** softkey to choose the desired material.
- To enter an emissivity value manually:
    1. Press the **No**. softkey.
    2. Use the down or up arrow softkey to change the entry. Hold down the up or down arrow softkey to increase the rate of change.
    3. Press the **Done** softkey when finished to return to the main menu.

Table 3. Surface Emissivity (561)

Materials	Switch Setting	Materials	Switch Setting
Aluminum		**Iron, Cast**	
Oxidized	Low	Oxidized	High, Medium
Alloy A3003		Unoxidized	Low
Oxidized	Low	Molten	Low
Roughened	Low	**Iron, Wrought**	
Brass		Dull	High
Burnished	Low	**Lead**	
Oxidized	Low	Rough	Low
Copper		Oxidized	Low, Medium
Oxidized	Medium	**Molybdenum**	
Electrical Terminal Blocks	Medium	Oxidized	Low, Medium
Haynes		**Nickel**	
Alloy	Medium	Oxidized	Low
Inconel		**Platinum**	
Oxidized	High, Medium	Black	High
Sandblasted	Medium	**Steel**	
Electoropolished	Low	Cold-Rolled	High
Iron		Ground Sheet	Medium
Oxidized	High, Medium	Polished Sheet	Low
Rusted	Medium	**Zinc**	
		Oxidized	Low

Table 4. Nominal Surface Emissivity (566/568)

Material	Value		Material	Value
Default****	0.95		Glass (plate)	0.85
Aluminum*	0.30		Iron*	0.70
Asbestos	0.95		Lead*	0.50
Asphalt	0.95		Oil	0.94
Brass*	0.50		Paint	0.93
Ceramic	0.95		Plastic**	0.95
Concrete	0.95		Rubber	0.95
Copper*	0.60		Sand	0.90
Food - Frozen	0.90		Steel*	0.80
Food - Hot	0.93		Water	0.93
			Wood ***	0.94

* Oxidized
** Opaque, over 20 mils
*** Natural
**** Factory Setting
Highlighted items may also be found in the emissivity table built into the thermometer.

°C and °F

To toggle between °C (Celsius) and °F (Fahrenheit) measurements, press the **Menu** softkey until **°C** or **°F** appears as the left softkey function. Press the corresponding softkey to change between the measurements.

Min, Max, Avg, Differential

The thermometers can measure minimum (MIN), maximum (MAX), average (AVG), or differential (Δ) temperatures each time a reading is taken. These values are not shown if a thermocouple is plugged into the thermometer.

To turn on the Min Max mode:

1. Press the **Menu** softkey until **MnMx** (Min Max) appears as the left softkey function.
2. Press the **MnMx** softkey.

The display shows the present reading, maximum and minimum readings, and the emissivity setting.

To turn on the Avg/Dif mode:

1. Press the **Menu** softkey until **Avg** appears as the right softkey function.
2. Press the **Avg** softkey.

The display shows the present reading, average reading, the differential reading between max and min (designated by Δ), and the emissivity setting.

Note

Min, Max, Avg, and Differential readings are saved as part of the saved data when either Min/Max or Avg/Dif mode is enabled.

Alarm

The thermometers have a programmable high and low alarm to designate high or low readings depending on the thresholds entered. When the alarm level is reached, an alarm will sound and the display will flash orange and white. To set either the high or low alarm:

1. Press the **Menu** softkey until **Alarm** appears as the right softkey function.
2. Press the **Alarm** softkey to access the Alarm menu.
3. Press either the **Hi** or **Lo** softkey, depending on which alarm will be set.
4. Press the **ON** softkey to turn the alarm on.
5. Press the **OFF** softkey to turn the alarm off.
6. Use the **Set** softkey to access the Hi or Lo Alarm Set menu.
7. Use the down or up softkeys to change the alarm setting.
8. Once the desired settings have been entered, press the **Done** softkey.

Trigger Lock

The thermometer trigger can be locked on for continuous measurement. To lock the trigger:

1. Press the **Menu** softkey until the lock symbol (🔒) appears as the left softkey function.
2. Press the 🔒 softkey to lock the trigger. The lock symbol appears on the display to designate a locked trigger. When the trigger is locked, the 🔒 softkey changes to 🔓. Press this softkey to unlock the trigger.

Laser

⚠⚠Warning

To prevent eye damage and personal injury:

- **Do not look into the laser. Do not point laser directly at persons or animals or indirectly off reflective surfaces.**

The thermometer is equipped with a laser used for aiming purposes only. The laser turns off when the trigger is released.

To enable or disable the laser:

1. Press the **Menu** softkey until **Laser** appears as the right softkey function.
2. Press the **Laser** softkey to enable or disable the laser. ⚠ appears on the display when the laser is enabled.

Setup

From the Setup menu, the backlight, time and date, and display language can be changed.

Backlight

In normal use, the backlight is always on. Use this menu to change the backlight setting from on to off. Turning the backlight off conserves battery power.

1. Press the **Menu** softkey until **Setup** appears as the left softkey function.
2. Press the **Setup** softkey.
3. **Backlight** has an indicator next to it. To enter the backlight menu, press the **Enter** softkey.
4. Press the **OFF** softkey to turn the backlight off, press the **ON** softkey to turn it on.
5. Press the **Back** softkey to return to the Setup Menu.

Time/Date

To change the time on the thermometer:

1. Press the **Menu** softkey until **Setup** appears as the left softkey function.
2. Press the **Setup** softkey to enter the Setup menu.
3. Press the down arrow softkey to select **Time/Date**.
4. Press the **Enter** softkey.
5. Select the **Time** softkey.
6. Select the desired time format softkey (**24hr** or **12hr**).
7. Use the up and down softkeys to change the selected hour to the desired hour.
8. Press the **Next** softkey to select the minutes.
9. Use the up and down softkeys to change the selection to the desired minute.
10. When in 12 hour mode, press the **Next** softkey to highlight the **am/pm** parameter.
11. Use the up and down softkey to change to **am** or **pm**.
12. Press the **Done** softkey when finished. The display reverts to the first page of the Time/Date menu.

To change the date on the thermometer:

1. From the main menu, press the **Menu** softkey until **Setup** appears as the left softkey function.
2. Press the **Setup** softkey.
3. Press the down arrow softkey to select **Time/Date**.
4. Press the **Enter** softkey.
5. Press the **Date** softkey.
6. Select the date format: Day/Month/Year (**dmy**) or Month/Day/Year (**mdy**).
7. Use the up and down softkeys to change the selected parameter.
8. Press the **Next** softkey and the arrow softkeys to select the month, date, or year parameters.
9. Use the up and down softkeys to change the selected parameter.
10. Press the **Next** softkey to move through each parameter.
11. Press the **Done** softkey when finished. The display reverts to the beginning of the Time/Date menu.

Language

To change the displayed language:

1. From the main menu, press the **Menu** softkey until **Setup** appears as the left softkey function.
2. Press the **Setup** softkey.
3. Use the down arrow softkey to move the indicator to **Language**.
4. Press the **Enter** softkey.
5. Use the down arrow to move the indicator to the desired language.
6. Press the **Enter** softkey to complete the language selection or press the **Back** softkey to return to the **Setup** menu.

Deleting Data

To delete stored data from the thermometer, from the main menu, press the **menu** softkey until **Mem** shows as the left softkey function. The last memory location appears on the display. To access the Delete menu, press the **Delete** softkey. From here, either all of the thermometer memory can be deleted or individual records.

Deleting All Data

To delete all of the records, press the **All** softkey. At the confirmation screen, press the **Yes** softkey.

Deleting Individual Data Records

To delete individual records, press the **View** softkey and then use the down and up arrow softkeys to access the desired record. Once the desired record is shown, press the **Yes** softkey to delete the record. To cancel data deletion, pull the trigger.

Buttons and Connector

Table 5 shows the buttons and connector used for the thermometers.

Table 5. Buttons and Connector

Button/ Connector	Description
MIN MAX (561)	Press MIN MAX and then press ▲▼ to toggle between the MIN, MAX, and DIF options.
EMS (561)	Selects the emissivity setting. You can toggle between LO (0.3), MED (0.7), or HI (0.95) using ▲▼ .
▲▼	The ▲▼ button is used to show the MIN, MAX, and DIF functions in the secondary display, whichever was pressed most recently.
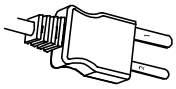	K-type thermocouple probe used to make contact temperature measurement.

How the Thermometers Work

Infrared thermometers measure the surface temperature of an object. The thermometer's optics sense emitted, reflected, and transmitted energy, which is collected and focused onto a detector. The unit's electronics translate the signal into a temperature reading which the unit displays (see Figure 5).

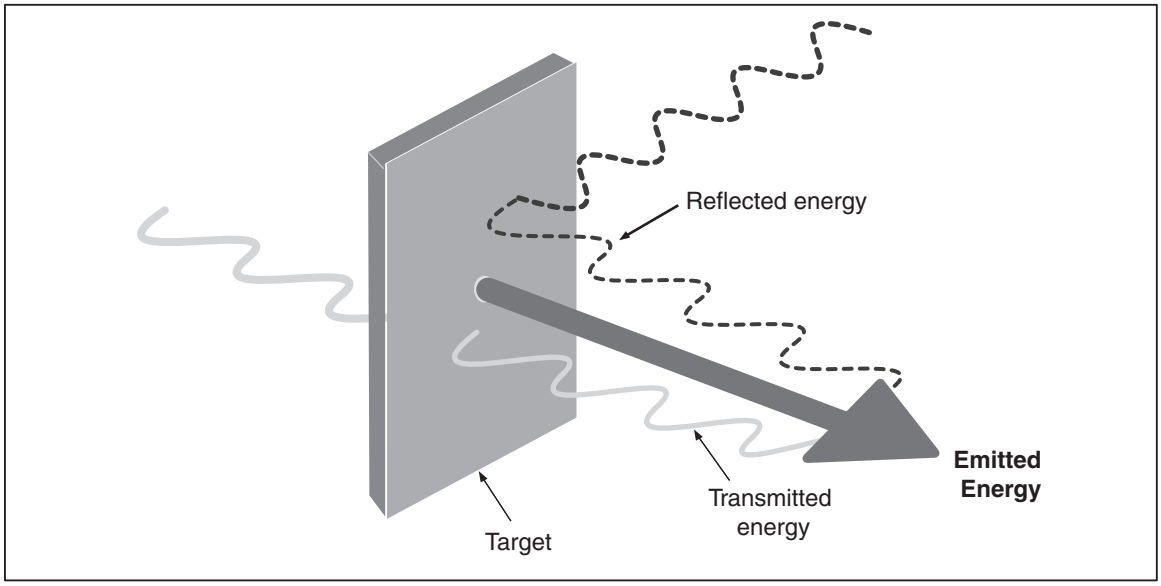

eyl002f.eps

Figure 5. How the Thermometer Works

Operating the Thermometer

Temperature Measurement

To measure temperature, point the thermometer at an object and pull the trigger. You can use the laser pointer to help aim the thermometer. You may also insert the K-type thermocouple probe for contact measurement. Be sure to consider distance-to-spot size ratio and field of view (see "Distance and Spot Size" and "Field of View"). The temperature appears on the display.

Note

The laser is used for aiming purposes only and is not related to temperature measurement.

The thermometer features an auto off function that automatically powers down the thermometer after 20 seconds of inactivity. To turn the thermometer on, pull the trigger.

Locating a Hot or Cold Spot

To find a hot or cold spot, aim the thermometer outside the desired area. Then, slowly scan across the area with an up and down motion until you locate the hot or cold spot (see Figure 6).

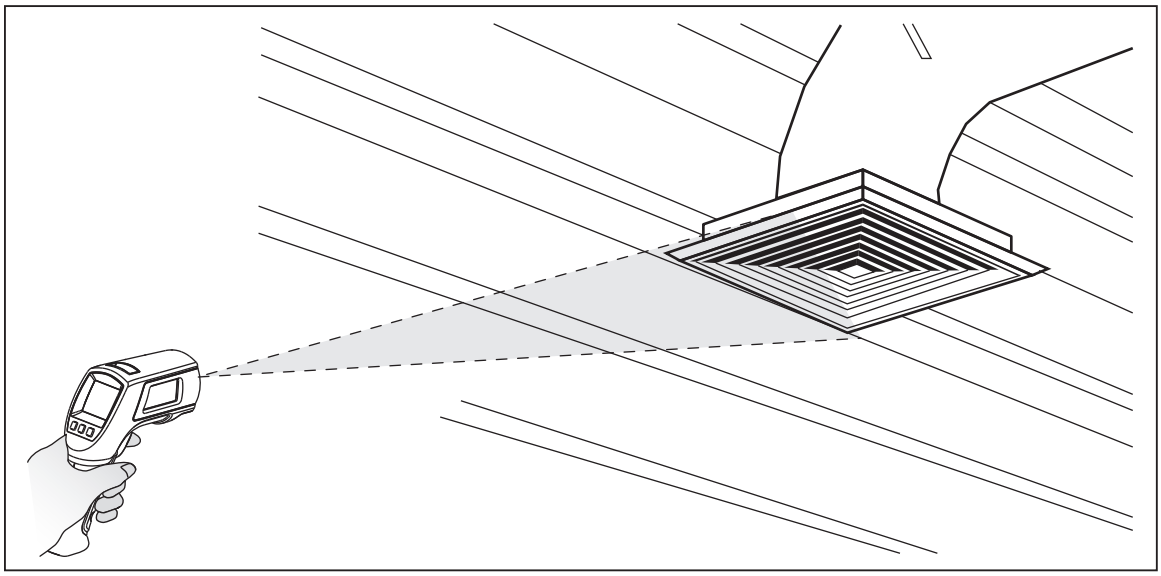

eyl07.eps

Figure 6. Locating a Hot or Cold Spot

Distance and Spot Size

As the distance (D) from the object being measured increases, the spot size (S) of the area measured by the unit becomes larger. The relationship between distance and spot size (D:S) for each unit is shown in Figure 7. The spot sizes indicate 90 % encircled energy.

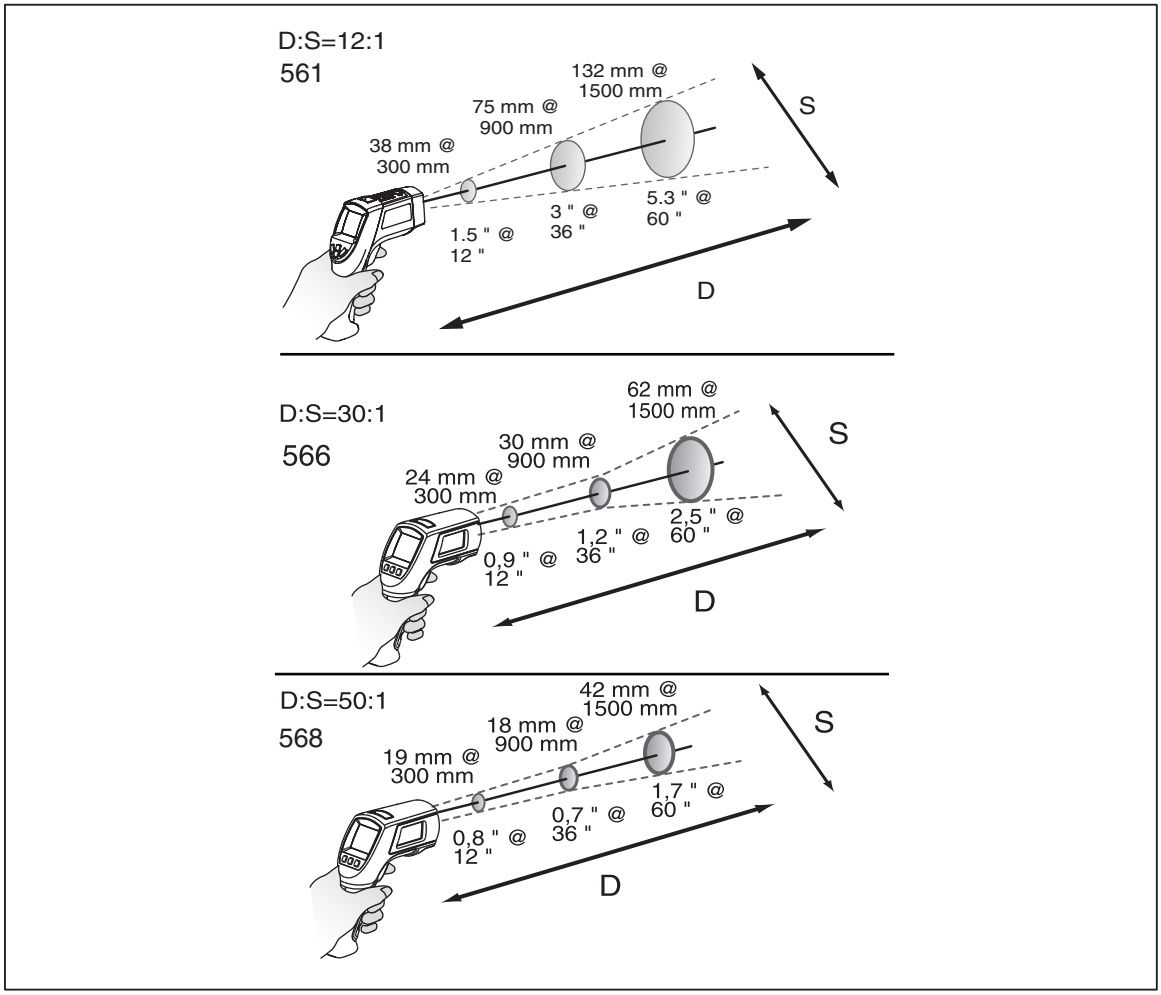

eyl06a.eps

Figure 7. Distance and Spot Size

Field of View

For accurate measurements, make sure that the target is larger than the unit's spot size. The smaller the target, the closer you should be to it (see Figure 8).

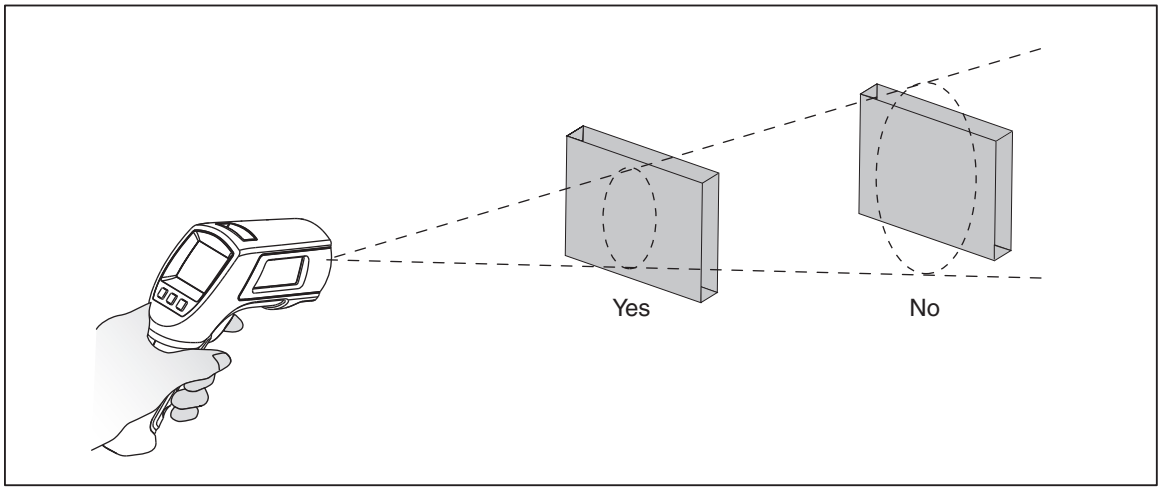

eyl05.eps

Figure 8. Field of View

Emissivity

Emissivity describes the energy-emitting characteristics of materials. Most organic materials and painted or oxidized surfaces have an emissivity of approximately 0.95, the default setting for the thermometer.

To compensate for inaccurate readings that may result from measuring shiny metal surfaces, you can cover the surface to be measured with electrical tape or flat black paint (<148 °C/300 °F) with emissivity set to 0.95. Allow time for the tape or paint to reach the same temperature as the surface beneath it. Measure the temperature of the tape or painted surface.

If you cannot paint or use tape, then you can improve the accuracy of your measurements by either numerically adjusting emissivity or by using the Emissivity Menu to access a table of some common materials. The thermometers have numerically adjustable emissivity from 0.10 to 1.00 that can be used in conjunction with the emissivities in Tables 3 and 4. Also, the thermometers have a built-in table of the most common materials that can be set from the Emissivity Menu. The built-in values are indicated in Tables 3 and 4.

HOLD

The display retains its last infrared measurement for twenty seconds when the trigger is released, with **HOLD** appearing on the display. With the probe inserted, the contact thermometer remains on. To freeze the infrared temperature when a probe is not inserted, release the trigger until **HOLD** appears on the display.

Storing Data

The 566 thermometer can store up to 20 data records. The 568 thermometer can store up to 99 data records. The following information is stored in each record:

- Record number
- IR and probe temperature in °F or °C
- Date/Time
- Emissivity
- Max/Min/Avg/Dif Temperature (if enabled)

For more information, see “Save”.

Downloading Data

The stored data of the 568 can be downloaded to a personal computer (PC) via the included USB cable and the included FlukeView® Forms Documenting Software. See the FlukeView® Forms documentation for details. The USB input ② is located on the top of the thermometer next to the external probe input ① (see Figure 9).

Note

To prevent incorrect readings, do not perform a temperature measurement of an earthed conductor while the 568 is connected to a PC that is earthed by a three-phase grounding plug.

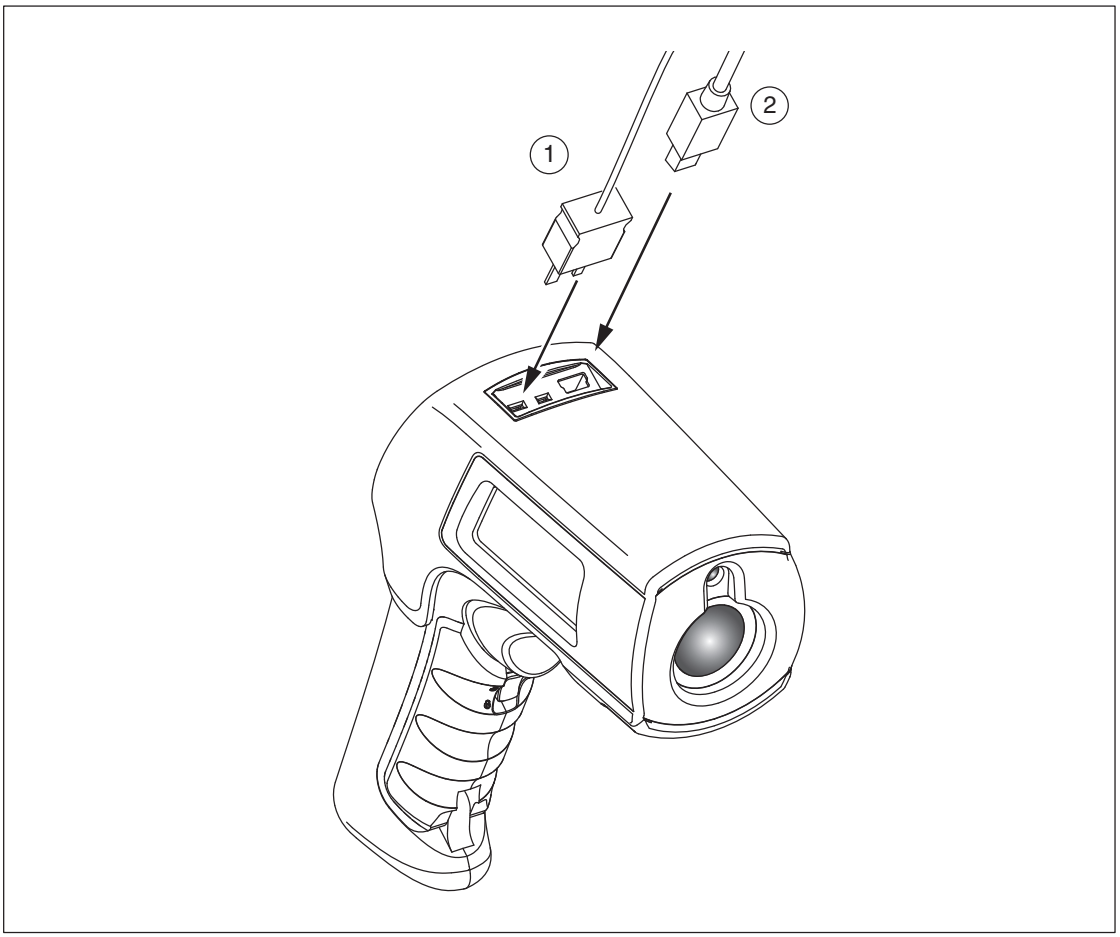

eyl03.eps

Figure 9. Thermocouple and USB Connections

External Contact Probe

⚠⚠Warning

To avoid electrical shock or personal injury, do not connect the external contact probe to live electrical circuits.

The thermometers come with a bead K-type thermocouple probe. The probes attach to the thermometers via the probe input located on the top of the thermometer (see Figure 9).

With the probe installed, the probe symbol (⊸) appears on the display. The probe can be used simultaneously while the thermometer is taking non-contact measurements. The probe readings are shown below the non-contact measurements. The thermometer will stay on when there is a probe inserted. When used with a personal computer and FlukeView Forms (568 only), the auto off feature is disabled.

Troubleshooting

See Table 6 for remedies to possible problems when using the thermometer.

Table 6. Troubleshooting

Symptom	Cause	Action
--- (on display)	Target temperature is over or under range.	Select target within specifications
▭	Low batteries	Replace Batteries
Blank display	Thermometer is asleep Possible dead batteries	Pull trigger Replace batteries
Laser does not work	Low or dead batteries Ambient temperature is above 40 °C (104 °F)	Replace batteries Use in area with lower ambient temperature
Failed communication via USB	Unit is off FlukeView Forms is not running	Pull the trigger Start FlukeView Forms
Inaccuracy	Possible incorrect emissivity setting, field of view, or spot size	See “Emissivity”, “Field of View” and “Distance and Spot Size” sections.
Settings such as emissivity, date/time, F/C, and saved data lost	Battery dead or not replaced in <1 minute of removal	Reset settings. Replace batteries as soon as low battery indicated; Exchange the batteries within one minute of removal. Refer to “Changing the Batteries”.

Maintenance

Battery Charge

Use the battery charge symbols to gauge the approximate level of charge left on the batteries.

Notes

When in low battery mode, the thermometer does not store values.
"Err" appears on the display if attempted.

Batteries are at 5 %. Before taking further readings, the batteries must be changed.

Changing the Batteries

⚠Warning

Batteries contain hazardous chemicals that can cause burns or explode. If exposure to chemicals occurs, clean with water and get medical aid. To prevent injury and for safe operation and maintenance:

- **Remove all probes, test leads, and accessories before the battery door is opened.**
- **Do not disassemble the battery.**
- **Repair the Product before use if the battery leaks.**
- **Remove batteries to prevent battery leakage and damage to the Product if it is not used for an extended period.**
- **Be sure that the battery polarity is correct to prevent battery leakage.**
- **Do not short the battery terminals together.**
- **Do not disassemble or crush battery cells and battery packs.**
- **Do not keep cells or batteries in a container where the terminals can be shorted.**
- **Do not put battery cells and battery packs near heat or fire. Do not put in sunlight.**

Note

The batteries should be replaced in less than one minute after removal to avoid manually re-initializing the thermometer clock and date.

To install or change the two AA batteries (see Figure 10):

1. Slide the locking tab on the battery door to the "unlock" position and then open the handle.
2. Insert the batteries noting their correct polarity.
3. Close and lock the handle.

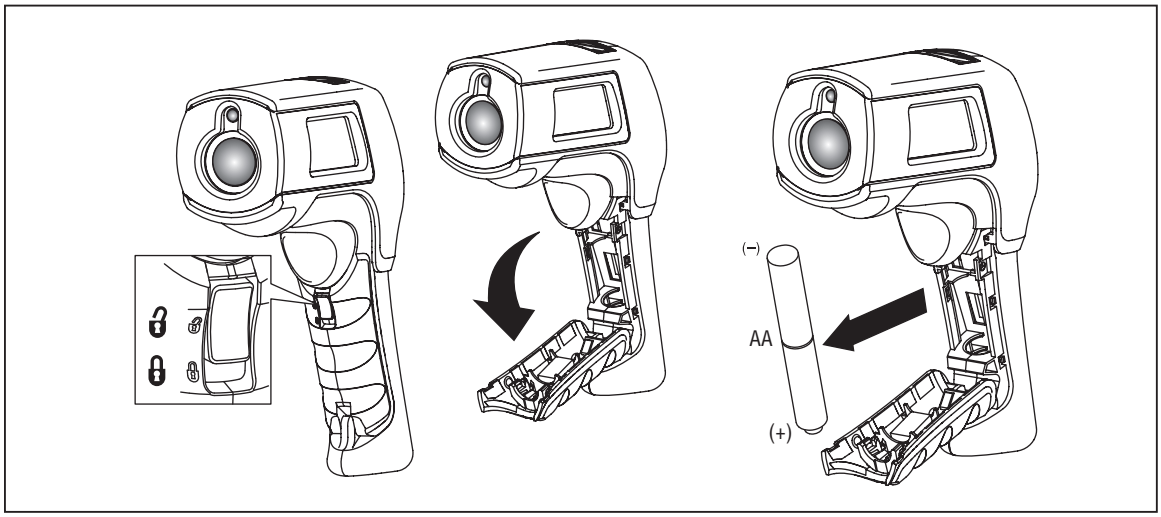

eyl04.eps

Figure 10. Battery Replacement

Cleaning the Lens

Blow off loose particles using clean compressed air. Carefully wipe the surface with a water-moistened cotton swab.

Cleaning the Housing

Use soap and water on a damp sponge or soft cloth.

⚠Caution

To avoid damaging the thermometers, do NOT submerge them in water. Do not use abrasive cleaners, they will damage the case.

User Replaceable Parts and Accessories

User Replaceable Parts

See Table 7 for a list of replaceable parts.

Table 7. Replaceable Parts

Part	Part Number
56x Manuals CD	3833037
56x Getting Started (English, French, German, Spanish, Portuguese, Japanese, Simplified Chinese, Italian, Russian, Polish, Czech)	3833028

Accessories

Optional accessories for the thermometers are:

- Soft Carrying Case (H6)
- Calibration Certification
- All Type-K Temperature Probes with standard mini-connector. See Table 8 for more information.

Recommended Temperature Probes

See Table 8 for a list of recommended temperature probes.

Table 8. Recommended Temperature Probes

Probe	Usage
80PK-1	The general purpose bead probe is an alternative, for quick, accurate surface temperatures and air temperatures within ducts, vent temperatures.
80PK-8	Pipe clamp probes (2) are essential for tracking continuously changing temperature differentials on hydronic tubing and pipe loops, and good for quick, accurate refrigerant temperatures.
80PK-9	The insulation piercing probe provides a sharp tip to pierce pipe insulation and flat probe tip for good surface thermal contact, air temperatures within ducts, and vent temperatures.
80PK-11	Flexible Cuff Thermocouple Temperature Probe is a convenient way to attach a thermocouple to a pipe while keeping hands free.
80PK-25	The piercing probe is the most versatile option. Good for checking air temperature in ducts, surface temperature under carpets/pads, liquids, thermometer wells, vent temperatures, and for penetrating pipe insulation.
80PK-26	The tapered probe is a good general-purpose gas and surface probe, with a good length and low mass tip casing for faster reaction to surface and air temperatures.

Specifications

Feature	561	566	568
IR Temperature Range	-40 °C to 550 °C (-40 °F to 1022 °F)	-40 °C to 650 °C (-40 °F to 1202 °F)	-40 °C to 800 °C (-40 °F to 1472 °F)
Accuracy	<0 °C: ±(1.0 °C + 0.1 °/1 °C) >0 °C: ±1 % or ± 1.0 °C, whichever is greater (<32 F±2 °F ±0.1 °/1 °F) >32 °F: ±1 % or ±2 °F), whichever is greater		
Repeatability	±0.5 % of reading or ±1 °C (2 °F), whichever is greater.	±0.5 % of reading or ±0.5 °C (1 °F), whichever is greater.	
Display Resolution	0.1 °C / 0.1 °F		
Spectral Response	8 to 14 µm		
Response Time (95 %)	<500 ms		
K-Type Thermocouple Input Temperature Range	0 °C to 100 °C (32 °F to 212 °F)	-270 °C to 1372 °C (-454 °F to 2501 °F)	
K-Type Thermocouple Input Accuracy	Input accuracy ±2.2 °C (±4 °F)	-270 °C to -40 °C: ±(1 °C + 0.2 °/1 °C) (-454 °F to -40 °F: ±(2 °F + 0.2 °/1 °F)) -40 °C to 1372 °C: ±1 % or 1 °C (-40 °F to 2501 °F: ±1 % or 2 °F), whichever is greater	
K-Type Thermocouple Resolution	0.1 °C (0.1 °F)	0.1 °C/0.1 °F	
Distance:Spot (90 % energy)	12:1	30:1	50:1
Laser sighting	Single laser, output <1 mW Class II, wavelength 630 to 670 nm		
Emissivity	Lo, Med, Hi	Digitally adjustable from 0.10 to 1.00 by 0.01 or via built-in table of common materials	
Data storage	-	20 points	99 points
Communication	none		USB 2.0
Operating Altitude	3000 meters above mean sea level		
Storage Altitude	12,000 meters above mean sea level		
Relative Humidity	10 % to 90 % RH non-condensing up to 30 °C (86 °F)		
Operating Temperature	0 °C to 50 °C (32 °F to 122 °F)	0 °C to 50 °C (32 °F to 122 °F)	
Storage Temperature	-20 °C to 65 °C (-4 °F to 149 °F)	-20 °C to 60 °C (-4 °F to 149 °F)	
Vibration	2.5 G, IEC 68-2-6		
Weight	0.322 kg (0.7099 lb)		
Dimensions	17.69 cm (6.965 in) H x 16.36 cm (6.441 in) L x 5.18 cm (2.039 in) W		
Power	2 AA /LR6 Batteries (alkaline or NiCD)		2 AA /LR6 Batteries or USB connection when used with a PC
Battery Life	12 hours with laser and backlight on; 100 hours with laser and backlight off, at 100 % duty cycle (thermometer continuously on)		
CE Certification	EN/IEC 61326-1:2006, Class B, Criteria A EN/IEC 61010-1:2001 EN/IEC 60825-1:2007		

561 Accessory

Feature	K-Type Thermocouple Probe (Wrap Type)
Measurement Range	0 °C to 100 °C (32 °F to 212 °F)
Accuracy	±2.2 °C (4.0 °F)
Cable Length	505 mm (20 in) cable terminated with a Type K thermocouple inside a 495 mm (19.5 in) nylon cuff

566/568 Accessory

Feature	K-Type Thermocouple Probe (Bead Type)
Measurement Range	-40 °C to 260 °C (-40 °F to 500 °F)
Accuracy	±1.1 °C (±2.0 °F) from 0 °C to 260 °C (32 °F to 500 °F). Typically within 1.1 °C (2.0 °F) from -40 °C to 0 °C (-40 °F to 32 °F)
Cable Length	1 m (40 in) K-type thermocouple cable with standard miniature thermocouple connector and bead termination