T4 series

4 A Triacs

Datasheet — production data

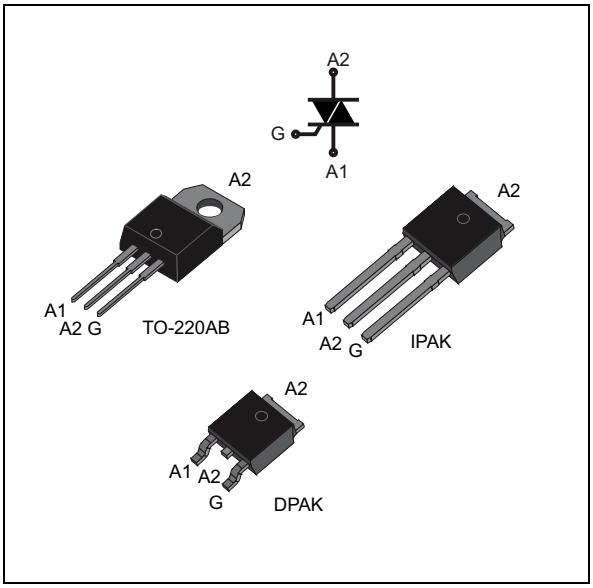

Table 1. Main characteristics

Symbol	Value	Unit
$I_{T(rms)}$	4	A
V_{DRM}, V_{RRM}	600 to 800	V
I_{GT}	5 to 35	mA

Table 2. Device summary

Symbol(1)	Marking
T405-xxxB	see *Table 11*
T405-xxxB-TR	
T405-xxxH	
T405-xxxT	
T410-xxxB	
T410-xxxB-TR	
T410-xxxH	
T410-xxxT	
T435-xxxB	
T435-xxxB-TR	
T435-xxxH	
T435-xxxT	

1. xxx = Voltage: 600 V, 700 V or 800 V (see *Table 10*).

Features

- Three quadrants Triac
- 600 to 800 V V_{DRM}/V_{RRM}

Applications

- General purpose AC inductive loads
- Motor control circuits
- Small home appliances

Description

Based on ST's Snubberless / logic level technology providing high commutation performances, the T4 series is suitable for use on AC inductive loads. They are recommended for applications using universal motors, electro valves, kitchen aid equipments, power tools, and dishwashers.

This is information on a product in full production. www.st.com

1 Characteristics

Table 3. Absolute maximum ratings (T_j = 25 °C unless otherwise stated)

Symbol	Parameter			Value	Unit
$I_{T(rms)}$	On-state rms current (full sine wave)	IPAK, DPAK, TO-220AB	T_c = 110 °C	4	A
I_{TSM}	Non repetitive surge peak on-state current (full cycle, T_j initial = 25 °C)	F = 50 Hz	t = 20 ms	30	A
		F = 60 Hz	t = 16.7 ms	31	
I^2t	I^2t value for fusing		t_p = 10 ms	5.1	A^2s
dI/dt	Critical rate of rise of on-state current $I_G = 2 \times I_{GT}$, $t_r \leq$ 100 ns	F = 120 Hz	T_j = 125 °C	50	A/µs
I_{GM}	Peak gate current	t_p = 20 µs	T_j = 125 °C	4	A
$P_{G(AV)}$	Average gate power dissipation		T_j = 125 °C	1	W
T_{stg} T_j	Storage junction temperature range Operating junction temperature range			- 40 to +150 - 40 to +125	°C

Table 4. Electrical characteristics (T_j = 25 °C, unless otherwise stated)

Symbol	Test conditions	Quadrant		Value			Unit
				T405	T410	T435	
I_{GT} (1)	V_D = 12 V, R_L = 30 Ω	I - II - III	Max.	5	10	35	mA
V_{GT}	V_D = 12 V, R_L = 30 Ω	I - II - III	Max.	1.3			V
V_{GD}	$V_D = V_{DRM}$, R_L = 3.3 kΩ , T_j = 125 °C	I - II - III	Min.	0.2			V
I_H (2)	I_T = 100 mA		Max.	10	15	35	mA
I_L	$I_G = 1.2\ I_{GT}$	I - III	Max.	10	25	50	mA
		II	Max.	15	30	60	
dV/dt (2)	V_D = 67% V_{DRM}, gate open	T_j = 125 °C	Min.	20	40	400	V/µs
(dI/dt)c (2)	(dV/dt)c = 0.1 V/µs	T_j = 125 °C	Min.	1.8	2.7		A/ms
	(dV/dt)c = 10 V/µs			0.9	2.0		
	(without snubber)					2.5	

1. Minimum I_{GT} is guaranteed at 5% of I_{GT} max.
2. For both polarities of A2 referenced to A1

Table 5. Static characteristics

Symbol	Test conditions			Value	Unit
V_{TM} (1)	I_{TM} = 5.5 A, t_p = 380 µs	T_j = 25 °C	Max.	1.56	V
V_{t0} (1)	Threshold voltage	T_j = 125 °C	Max.	0.89	V
R_d (1)	Dynamic resistance	T_j = 125 °C	Max.	120	mΩ
I_{DRM} I_{RRM}	V_{DRM} = V_{RRM}	T_j = 25 °C	Max.	5	µA
		T_j = 125 °C		1	mA

1. For both polarities of A2 referenced to A1

Table 6. Thermal resistance

Symbol	Parameter			Value	Unit
$R_{th(j-c)}$	Junction to case (AC)		IPAK, DPAK,TO-220AB	2.6	°C/W
$R_{th(j-a)}$	Junction to ambient	S(1) = 0.5 cm²	DPAK	70	°C/W
	Junction to ambient		TO-220AB	60	°C/W
			IPAK	100	°C/W

1. S = Copper surface under tab.

Figure 1. Maximum power dissipation versus RMS on-state current (full cycle)

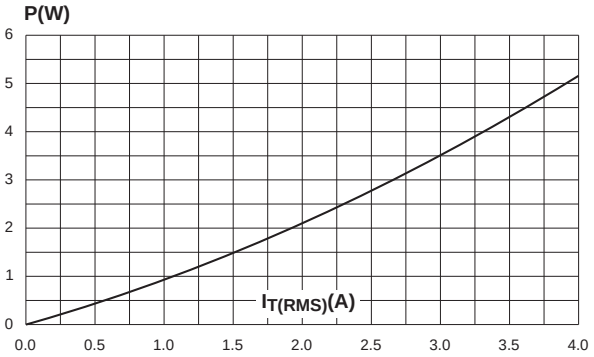

Figure 2. RMS on-state current versus case temperature (full cycle)

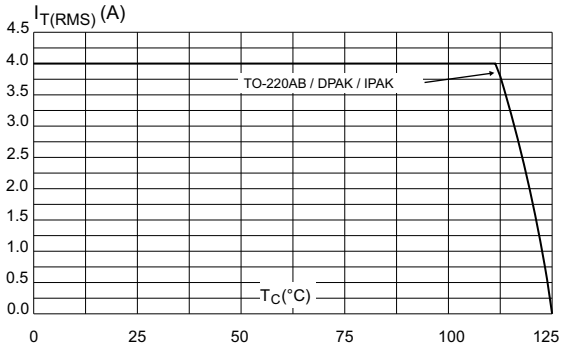

Figure 3. RMS on-state current versus ambient temperature (printed circuit board FR4, copper thickness: 35µm) (full cycle)

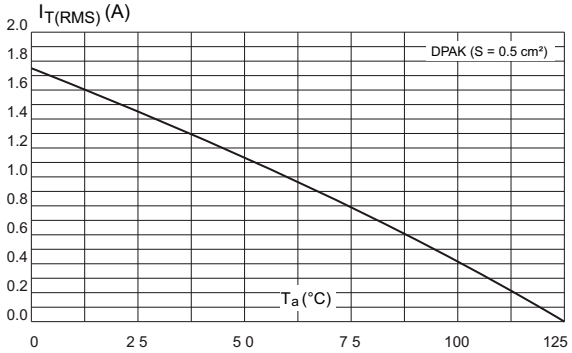

Figure 4. Relative variation of thermal impedance versus pulse duration

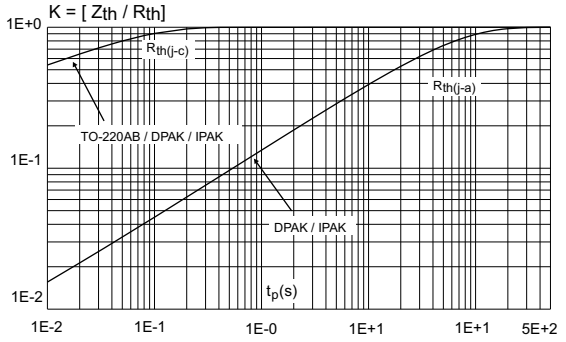

Figure 5. On-state characteristics (maximum values)

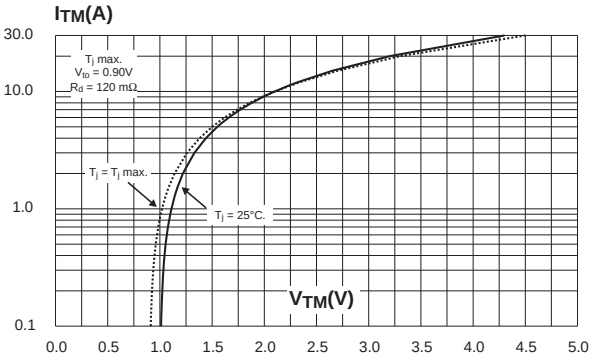

Figure 6. Surge peak on-state current versus number of cycles

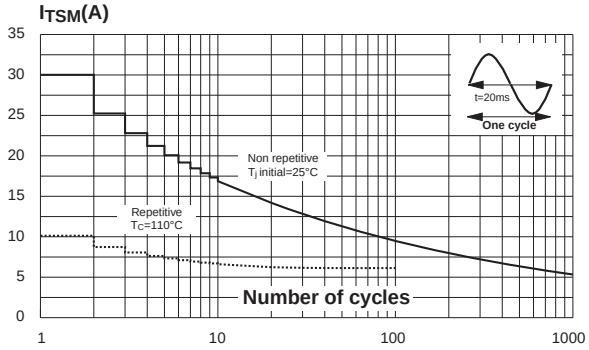

Figure 7. Non-repetitive surge peak on-state current for a sinusoidal pulse with width t_p < 10 ms

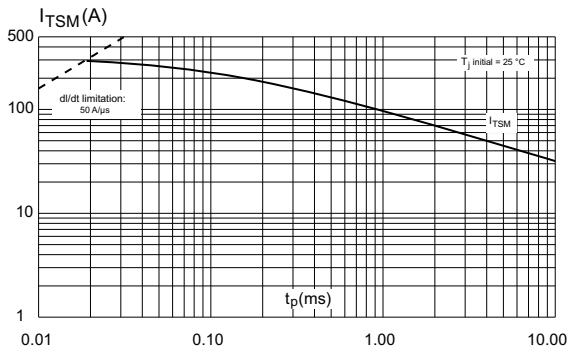

Figure 8. Relative variation of gate trigger current, holding current and latching current versus junction temperature (typical values)

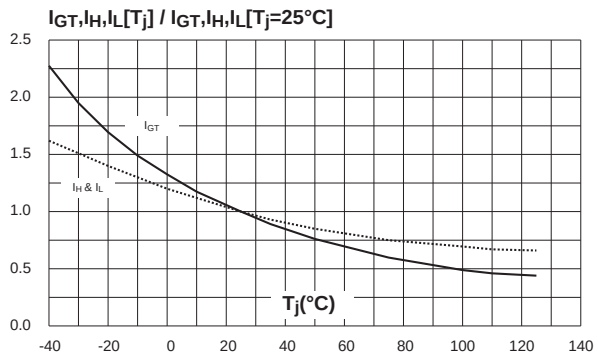

Figure 9. Relative variation of critical rate of decrease of main current versus (dV/dt)c (typical values)

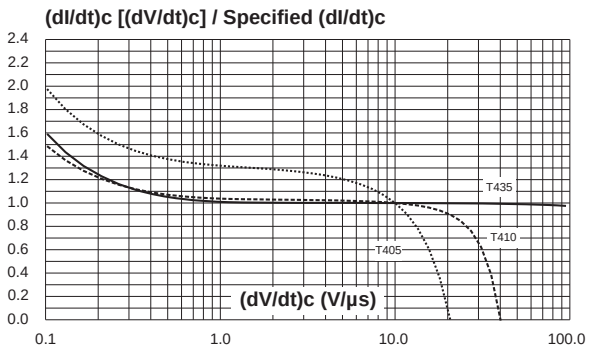

Figure 10. Relative variation of critical rate of decrease of main current versus junction temperature

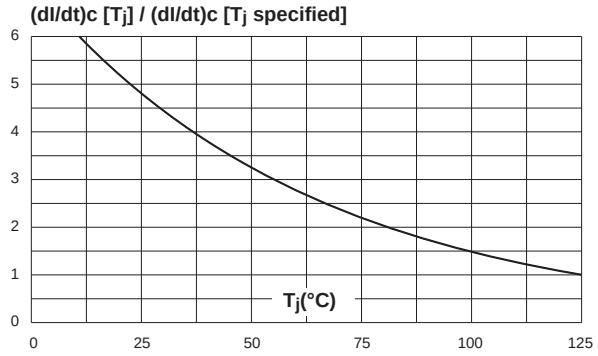

Figure 11. DPAK thermal resistance junction to ambient versus copper surface under tab (printed circuit board FR4, copper thickness: 35 µm)

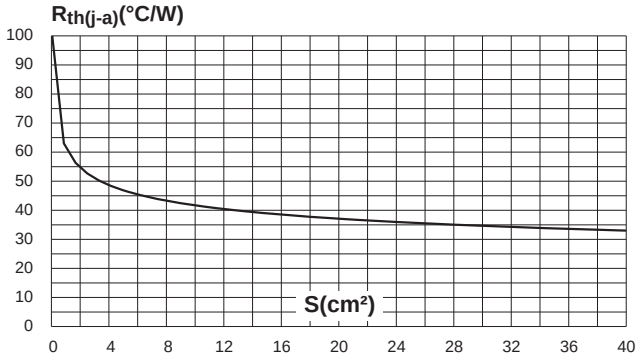

2 Package information

- Molding epoxy meets UL94, V0 and is halogen free
- Lead-free package
- Recommended torque: 0.4 to 0.6 N·m for TO-220AB

In order to meet environmental requirements, ST offers these devices in different grades of ECOPACK® packages, depending on their level of environmental compliance. ECOPACK® specifications, grade definitions and product status are available at: *www.st.com*. ECOPACK® is an ST trademark.

2.1 DPAK package information

Figure 12. DPAK package outline

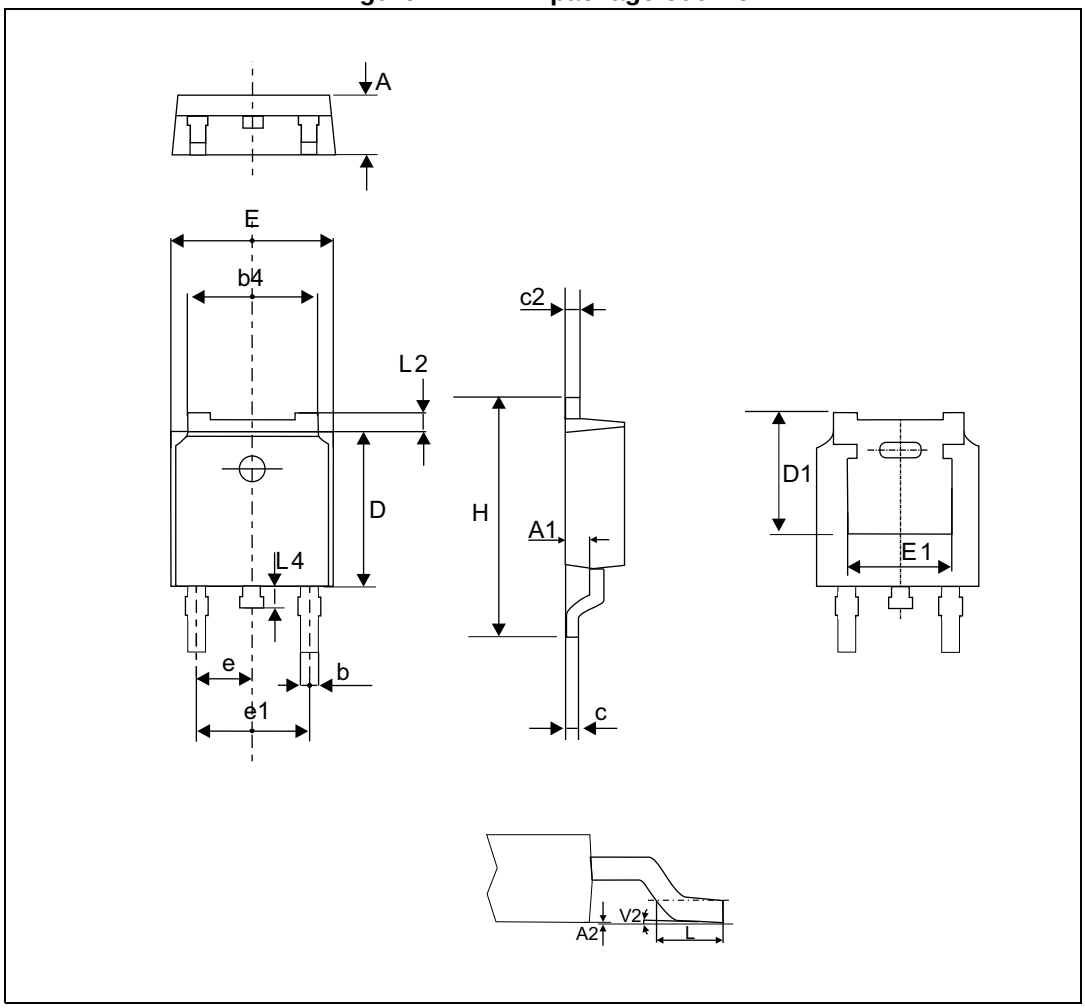

Note: This package drawing may slightly differ from the physical package. However, all the specified dimensions are guaranteed.

Table 7. DPAK package mechanical data

Ref.	Dimensions					
	Millimeters			Inches[1]		
	Min.	Typ.	Max.	Min.	Typ.	Max.
A	2.18		2.40	0.086		0.0944
A1	0.9		1.10	0.035		0.0433
A2	0.03		0.23	0.0011		0.0090
b	0.64		0.90	0.0251		0.0354
b4	4.95		5.46	0.1948		0.2149
c	0.46		0.61	0.0181		0.0240
c2	0.46		0.60	0.0181		0.0236
D	5.97		6.22	0.2350		0.2448
D1	4.95			0.1948		
E	6.35		6.73	0.2500		0.2649
E1	4.32			0.1700		
e		2.286			0.09	
e1		4.572			0.18	
H	9.35		10.40	0.3681		0.4094
L	1.0		1.78	0.039		0.0700
L2			1.27			0.0500
L4	0.6		1.02	0.023		0.0401
V2	-8°		+8°	-8°		+8°

1. Inch dimensions are only for reference

Figure 13. Footprint (dimensions in mm)

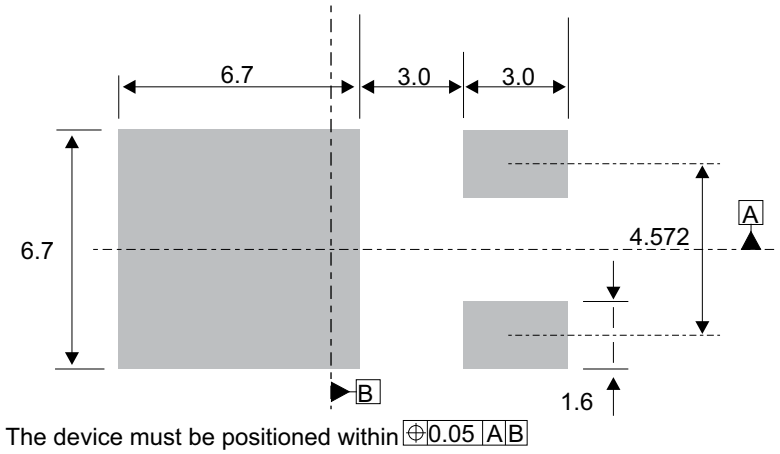

2.2 IPAK package information

Figure 14. IPAK package outline

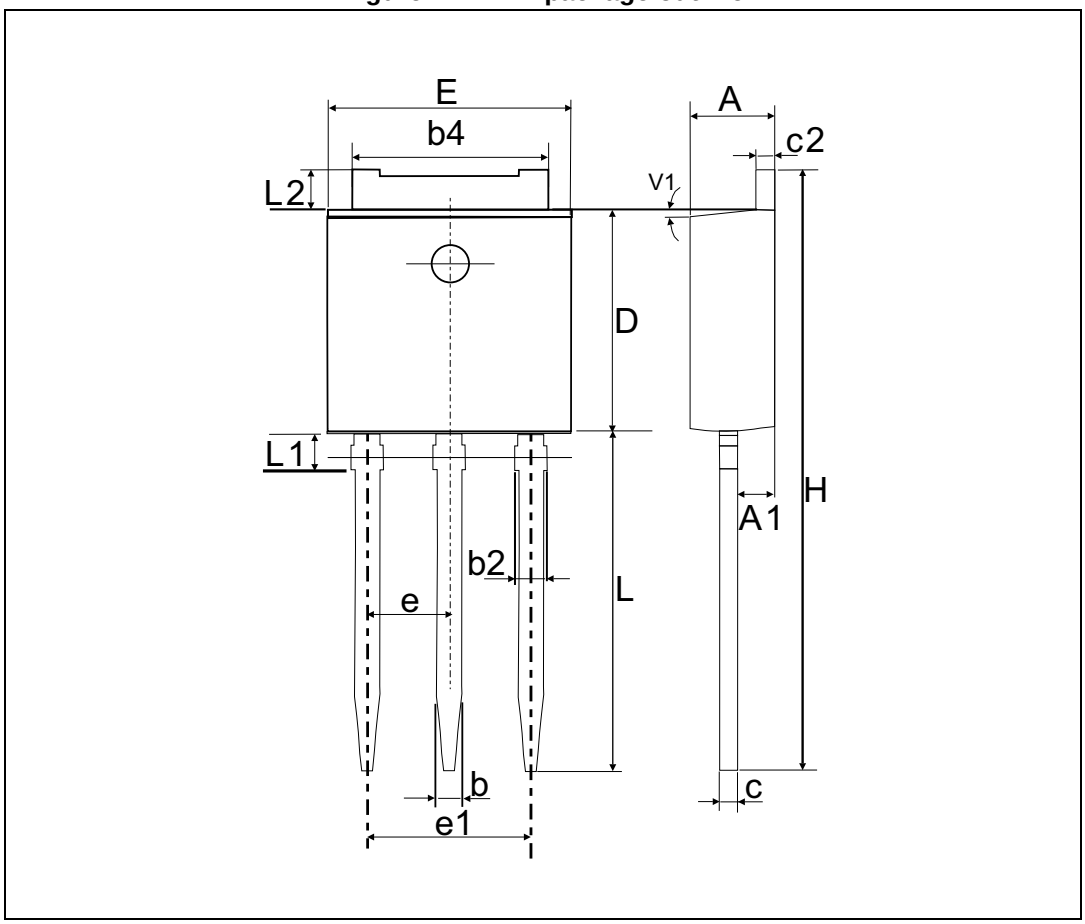

Note: This package drawing may slightly differ from the physical package. However, all the specified dimensions are guaranteed.

Table 8. IPAK package mechanical data

Ref.	Dimensions					
	Millimeters			Inches[1]		
	Min.	Typ.	Max.	Min.	Typ.	Max.
A	2.20		2.40	0.0866		0.0945
A1	0.90		1.10	0.0354		0.0433
b	0.64		0.90	0.0252		0.0354
b2			0.95			0.0374
b4	5.20		5.43	0.2047		0.2138
c	0.45		0.60	0.0177		0.0236
c2	0.46		0.60	0.0181		0.0236
D	6		6.20	0.2362		0.2441
E	6.40		6.65	0.2520		0.2618
e		2.28			0.0898	
e1	4.40		4.60	0.1732		0.1811
H		16.10			0.6339	
L	9		9.60	0.3543		0.3780
L1	0.8		1.20	0.0315		0.0472
L2		0.80	1.25		0.0315	0.0492
V1		10°			10°	

1. Inch dimensions are only for reference

2.3 TO-220AB (insulated and non-insulated) information

Figure 15. TO-220AB (insulated and non-insulated) package outline

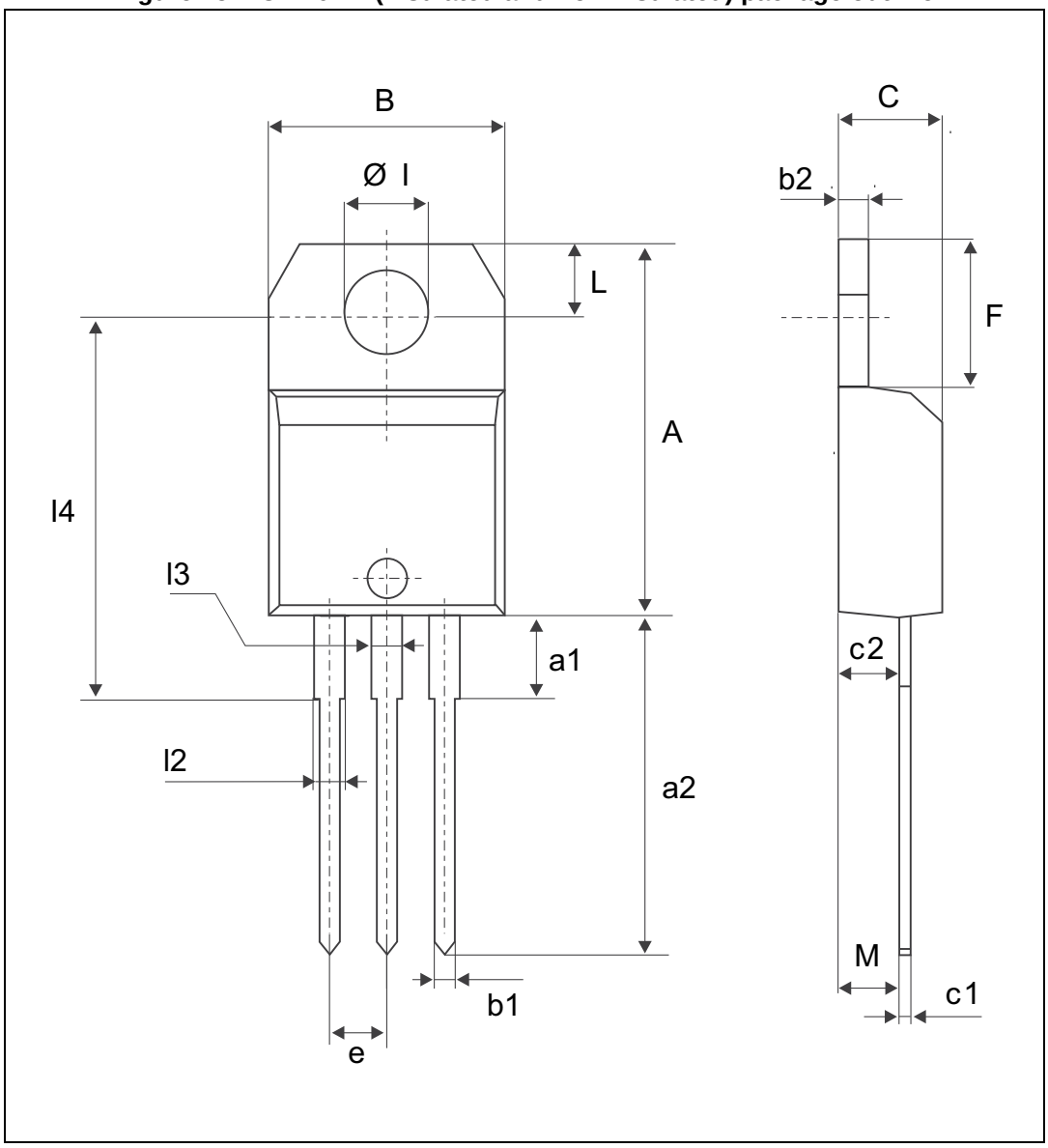

Table 9. TO-220AB (insulated and non-insulated) package mechanical data

Ref.	Dimensions					
	Millimeters			Inches[1]		
	Min.	Typ.	Max.	Min.	Typ.	Max.
A	15.20		15.90	0.5984		0.6259
a1		3.75			0.1476	
a2	13.00		14.00	0.5118		0.5511
B	10.00		10.40	0.3937		0.4094
b1	0.61		0.88	0.0240		0.0346
b2	1.23		1.32	0.0484		0.0519
C	4.40		4.60	0.1732		0.1811
c1	0.49		0.70	0.0192		0.0275
c2	2.40		2.72	0.0944		0.1070
e	2.40		2.70	0.0944		0.1062
F	6.20		6.60	0.2440		0.2598
ØI	3.73		3.88	0.1468		0.1527
l4	15.80	16.40	16.80	0.6220	0.6456	0.6614
L	2.65		2.95	0.1043		0.1161
l2	1.14		1.70	0.0448		0.0669
l3	1.14		1.70	0.0448		0.0669
M		2.60			0.1023	

1. Inch dimensions are only for reference

3 Ordering information

Figure 16. Order information scheme

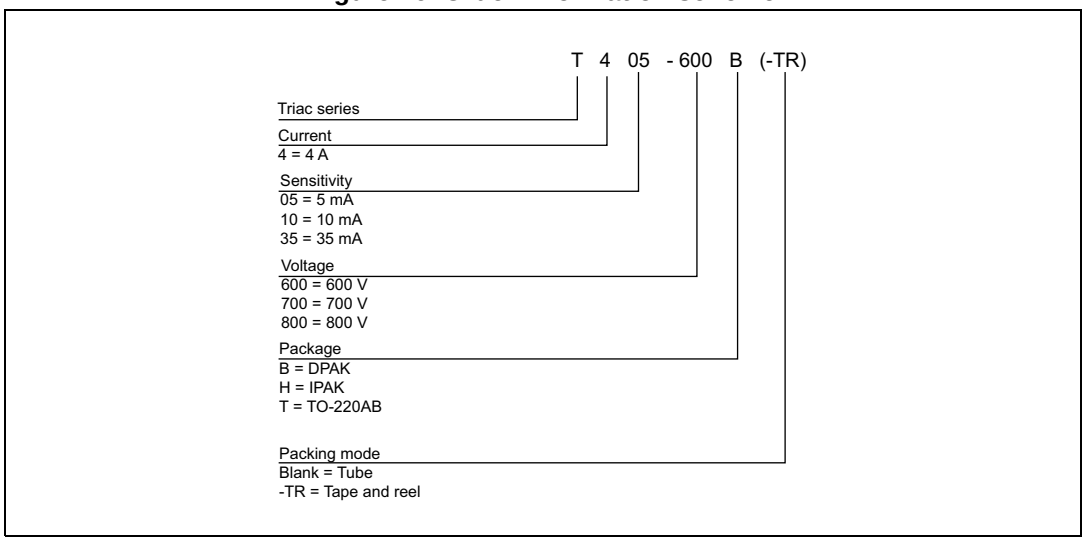

Table 10. Product selector

Part number	Voltage (xxx)			Sensitivity	Type	Package
	600 V	700 V	800 V			
T405-xxxB	X			5 mA	Logic level	DPAK
T405-xxxB-TR	X	X	X	5 mA	Logic level	DPAK
T405-xxxH	X		X	5 mA	Logic level	IPAK
T405-xxxT	X			5 mA	Logic level	TO-220AB
T410-xxxB	X			10 mA	Logic level	DPAK
T410-xxxB-TR	X		X	10 mA	Logic level	DPAK
T410-xxxH	X		X	10 mA	Logic level	IPAK
T410-xxxT	X	X	X	10 mA	Logic level	TO-220AB
T435-xxxB	X			35 mA	Snubberless	DPAK
T435-xxxB-TR	X	X	X	35 mA	Snubberless	DPAK
T435-xxxH	X		X	35 mA	Snubberless	IPAK
T435-xxxT	X		X	35 mA	Snubberless	TO-220AB

Blank = Unavailable

Table 11. Ordering information

Order code	Marking	Package	Weight	Base qty.	Delivery mode
T405-600B	T4 0560	DPAK	0.3 g	75	Tube
T410-600B	T4 1060				
T435-600B	T4 3560				
T405-600B-TR	T4 0560			2500	Tape and reel
T410-600B-TR	T4 1060				
T435-600B-TR	T4 3560				
T405-700B-TR	T4 0570				
T435-700B-TR	T4 3570				
T405-800B-TR	T4 0580				
T410-800B-TR	T4 1080				
T435-800B-TR	T4 3580				
T405-600H	T4 0560	IPAK	0.4 g	75	Tube
T410-600H	T4 1060				
T435-600H	T4 3560				
T405-800H	T4 0580				
T410-800H	T4 1080				
T435-800H	T4 3580				
T405-600T	T405-600T	TO-220AB	2.3 g	50	
T410-600T	T410-600T				
T435-600T	T435-600T				
T410-700T	T410-700T				
T410-800T	T410-800T				
T435-800T	T435-800T				

4 Revision history

Table 12. Document revision history

Date	Revision	Changes
Jun-2003	2	Last updated.
25-Mar-2005	3	Layout updated, No content change.
25-Jan-2006	4	Markings changed in *Table 12*.
14-May-2014	5	Updated DPAK and IPAK package information and reformatted to current standard.
11-Feb-2015	6	Updated package silhouettes in cover page.
1-Apr-2016	7	Removed ISOWATT-220AB package information.
05-Oct-2016	8	Updated *Table 3* and *Table 11.* Updated *Figure 2* and *Figure 4*.
14-Nov-2016	9	Updated *Table 1*.

IMPORTANT NOTICE – PLEASE READ CAREFULLY

STMicroelectronics NV and its subsidiaries (“ST”) reserve the right to make changes, corrections, enhancements, modifications, and improvements to ST products and/or to this document at any time without notice. Purchasers should obtain the latest relevant information on ST products before placing orders. ST products are sold pursuant to ST’s terms and conditions of sale in place at the time of order acknowledgement.

Purchasers are solely responsible for the choice, selection, and use of ST products and ST assumes no liability for application assistance or the design of Purchasers’ products.

No license, express or implied, to any intellectual property right is granted by ST herein.

Resale of ST products with provisions different from the information set forth herein shall void any warranty granted by ST for such product.

ST and the ST logo are trademarks of ST. All other product or service names are the property of their respective owners.

Information in this document supersedes and replaces information previously supplied in any prior versions of this document.

© 2016 STMicroelectronics – All rights reserved