WARNING: The LEDs on this demo board produce very bright light. Do not look directly at LEDs when power is applied. Serious eye damage may occur.

DESCRIPTION

Demonstration circuits 880 & 881 are multi-display LED controllers featuring the LTC3209-2 and LTC3209-1 respectively.

The LTC3209-1 and LTC3209-2 are highly integrated multi-display LED controllers. These devices contain a high efficiency, low noise charge pump to provide power for MAIN, camera (CAM), and auxiliary (AUX) LED displays. The LTC3209-1 and LTC3209-2 require only four small ceramic capacitors plus one resistor to form a complete LED power supply and current controller.

The maximum display currents are set with a single 24.3K ohm resistor. Current for each LED is controlled with a precision internal current source. Dimming and ON/OFF control for all displays are achieved via a 2-wire I^2C serial interface. 256 dimming states are available for the MAIN display, 16 states are available for the CAM display, and 4 states are available for the AUX display.

The charge pump optimizes efficiency based on the voltage across the LED current sources. The part powers up in 1X mode and will automatically switch to boost mode whenever any enabled LED current source begins to drop out. The first dropout switches the part to 1.5X mode and a subsequent dropout switches the part into 2X mode. The part resets to 1X mode whenever a data bit is updated via the I^2C port or when CAMHL switches low. The charge pump can also be programmed to be in 1.5X mode or 2X mode via the I^2C interface.

Design files for this circuit board are available. Call the LTC factory.

, LTC and LT are registered trademarks of Linear Technology Corporation.

QUICK START PROCEDURE

Demonstration circuits 880 and 881 are easy to setup to evaluate the performance of the LTC3209-1 or LTC3209-2. Follow the procedure below for the measurement and equipment setup.

1. Connect DC880 or DC881 to the DC590 USB Serial Controller using the supplied 14-conductor ribbon cable as shown in Figure 1. Refer to the DC590 Quick Start guide for software installation details.
2. Attach the supplied USB cable to your computer and then to the DC590 controller board.
3. Run the QuickEval™ program. The program detects the DC880 or DC881 and displays the LTC3209 control window (shown in Figure 3).
4. Attach a 2.9 – 4.5V power source to the Vin and GND turrets of the DC880 or DC881 demo board as shown in Figure 2. This is the Vin power supply for the LTC3209-1 or LTC3209-2 (see application schematic). DC880 and DC881 have an extra 4.7uF de-coupling capacitor on Vin to help accommodate long lead lengths. The DC590 board gets its power from the USB cable.

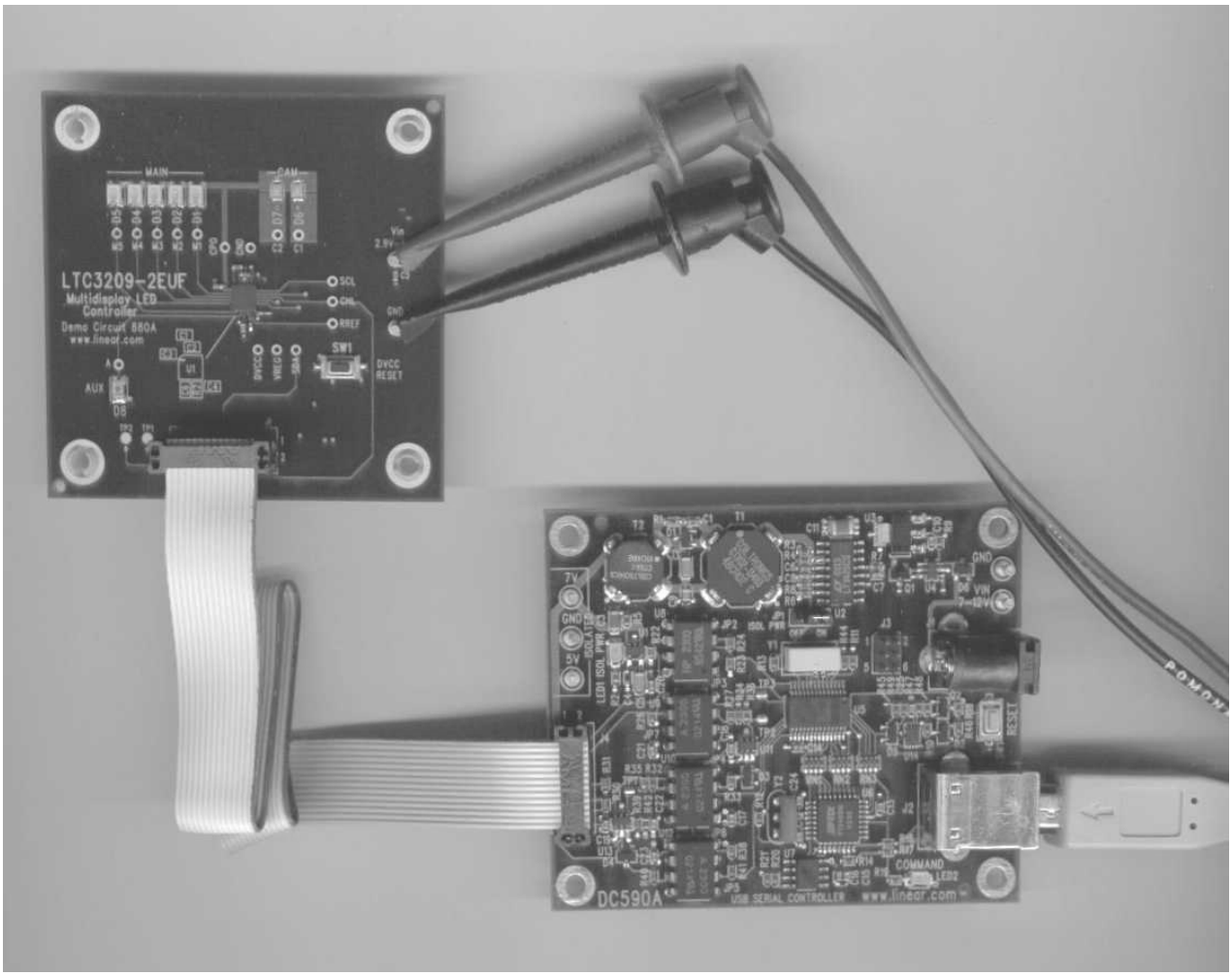

Figure 1. Proper Serial Interface Connection for DC880 and DC881 (DC880 shown)

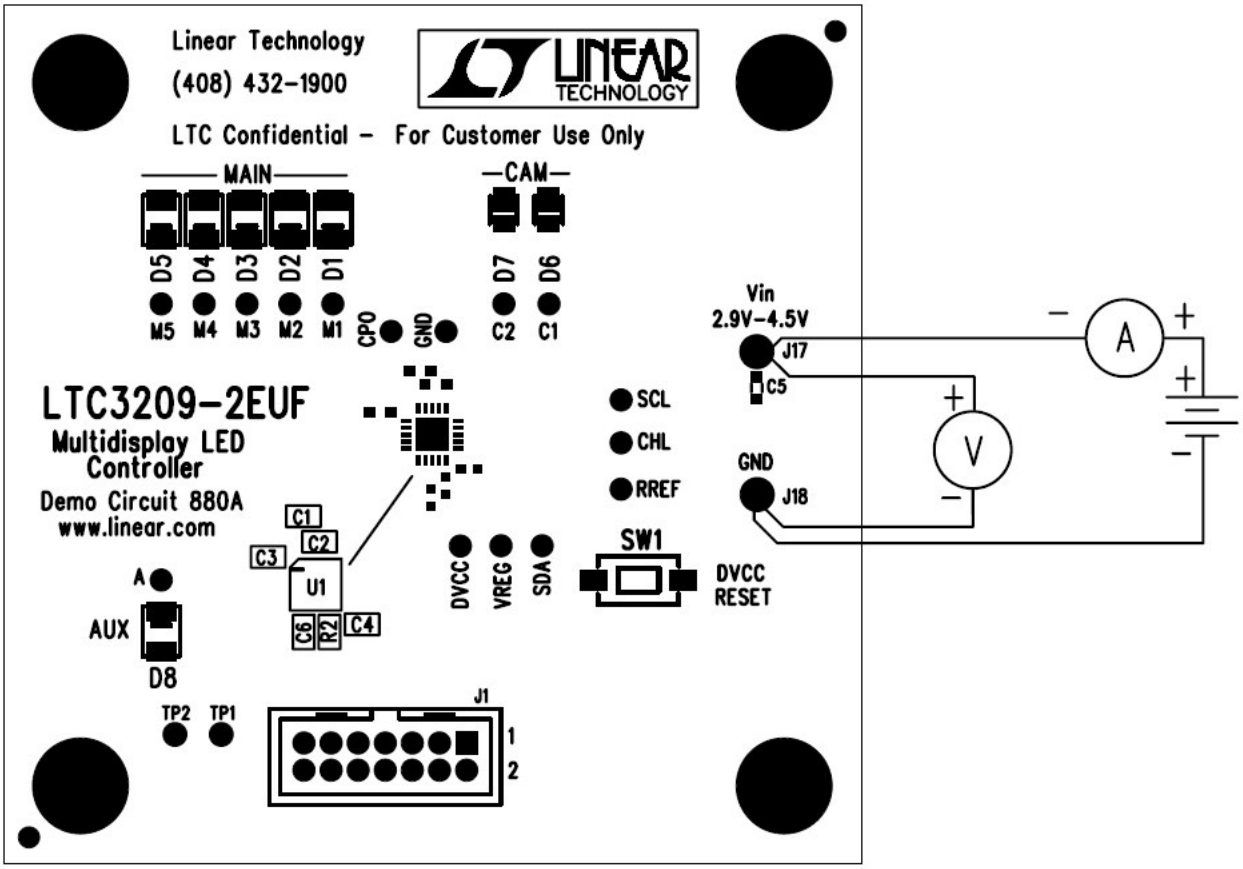

Figure 2. Proper Measurement Equipment Setup for DC880 and DC881 (DC880 shown)

USING THE LTC3209 QUICKEVAL SOFTWARE

The program provides brightness controls for the MAIN, CAM, and AUX LEDs. The **UPDATE ALL REG** button updates all registers in the LTC3209-1 and LTC3209-2 to the current settings on the LTC3209 demo control window. The **CAM FLASH** button flashes the CAM LED(s) from the CAM Low register to the CAM High register for the time selected in the drop-down window. The **CAM FLASH Select** option button allows the user to flash the CAM display via the I^2C bus or the CAMHL pin. The **FLASH TIME** drop-down window allows the user to select the flash time from 50ms to 1000ms in various increments. **The Charge Pump Mode** option buttons allow the user to select between **Auto** switching, **Force 1.5X**, or **Force 2X** charge pump modes. The **Dropout Time** option buttons allow the user to select between 150ms or 2ms dropout times. The demo button briefly illustrates how the LTC3209-1 or LTC3209-2 may be used. The **LEDS OFF** button resets all LEDs to zero, stops and resets Demo 1.

VIEW LTC3209 PRODUCT PAGE Button – This button opens an internet browser and searches the Linear Technology Corporation web site for information on the LTC3209 when an internet connection is available.

MAIN Control – This vertical slide control adjust the MAIN display from 0 to 25mA in 256 steps. This is accomplished by clicking on the up or down arrows to increment by one LSB, by clicking and dragging the slide pointer, or by clicking in the vertical scroll bar to increment by 10 hex.

The hex code is displayed in the box below the slider.

AUX Control – This vertical slide control adjust the AUX display from 0 to 15mA in 4 steps. The LED intensity may be adjusted by clicking on the up or down arrows to increment by one LSB or by clicking and dragging the slide pointer. The hex code is displayed in the box below the slider.

CAML Control – This vertical slide control adjust the CAM display from 0 to 107mA for DC881 and 0 to 55mA for DC880 in 5 steps. The current is limited in software because some LEDs can not handle large continuous currents for long periods. The LED intensity may be adjusted by clicking on the up or down arrows to increment by one LSB or by clicking and dragging the slide pointer. The hex code is displayed in the box below the slider.

CAMH Control – This is a vertical slide that controls the intensity set in the CAMH register from 0 to 400mA for DC881 and 0 to 200mA for DC880 in 16 steps. When the CAM FLASH button is selected, the CAM display illuminates at the intensity set by the CAMH register on the release of the mouse button for the length of time selected in the FLASH TIME drop-down window. The LED intensity may be adjusted by clicking on the up or down arrows to increment by one LSB or by clicking and dragging the slide pointer. The hex code is displayed in the box below the slider.

CAM FLASH Button – When this button is selected and released, the CAM display will flash at the intensity selected in the CAMH register for a period selected in the **FLASH TIME** drop-down window. This is accomplished by applying a pulse on the CAMHL pin or by setting the Scamhilo bit via the I^2C interface.

CAM FLASH Select Option Buttons – These buttons allow the user to select the method in which the CAM display is flashed. When the **CAMHL PIN** option button is selected, the CAM display is flashed by applying a pulse on the CAMHL Pin. If the **I2C** option button is selected, the CAM display is flashed by momentarily setting the Scamhilo bit in the C register via the I^2C bus.

FLASH TIME Drop-Down Window – This window allows the user to select a flash time from 50ms to 1000ms in various increments. The flash time is the time the program selects the CAMH register on the release of the mouse button after the **CAM FLASH** button was selected.

UPDATE ALL REG Button – When this button is selected, all of the LTC3209-1 or LTC3209-2 registers are updated to the present settings on the demo control window. This is beneficial when power is initially applied to the demo board, the ribbon cable has been disconnected, or when the **RESET** push button has been depressed.

DEMO 1 Light Cycle Button – This button may be selected to start or stop Demo 1. Demo 1 cycles through the brightness levels of all the LEDs and flashes between various CAMH and CAML intensities using the I^2C serial port.

LEDS OFF Button – This button will turn the brightness levels to zero on all of the LEDs and will turn off and reset Demo 1.

Force Charge Pump Option Buttons – These buttons allow the user to select between **Auto** switching, **Forced 1.5X**, or **Forced 2X** Charge Pump modes via the I^2C bus.

REGA – REGC Hex Display Boxes – These boxes display the hex value last written to the corresponding register from the DC590A board.

DVCC RESET Push Button – This button is located on the DC880 and the DC881 demo boards. It shuts down DVCC causing the LTC3209-1 or LTC3209-2 to shutdown and clears all the registers when depressed. The reset button will not update or change the demo control window. The **UPDATE ALL REG** button may be used to update the registers to the current demo control window settings.

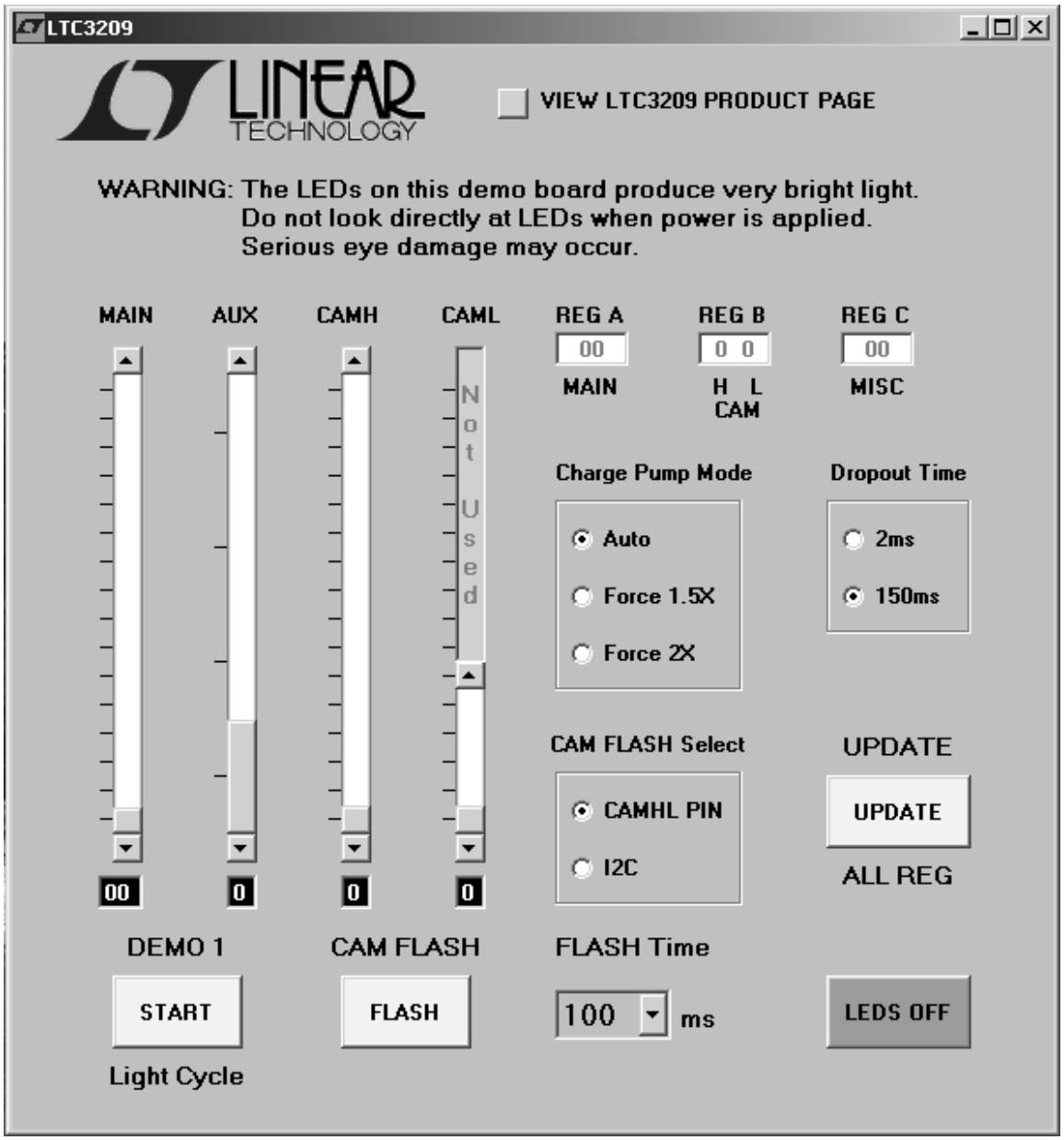

Figure 3. LTC3209 Control Window

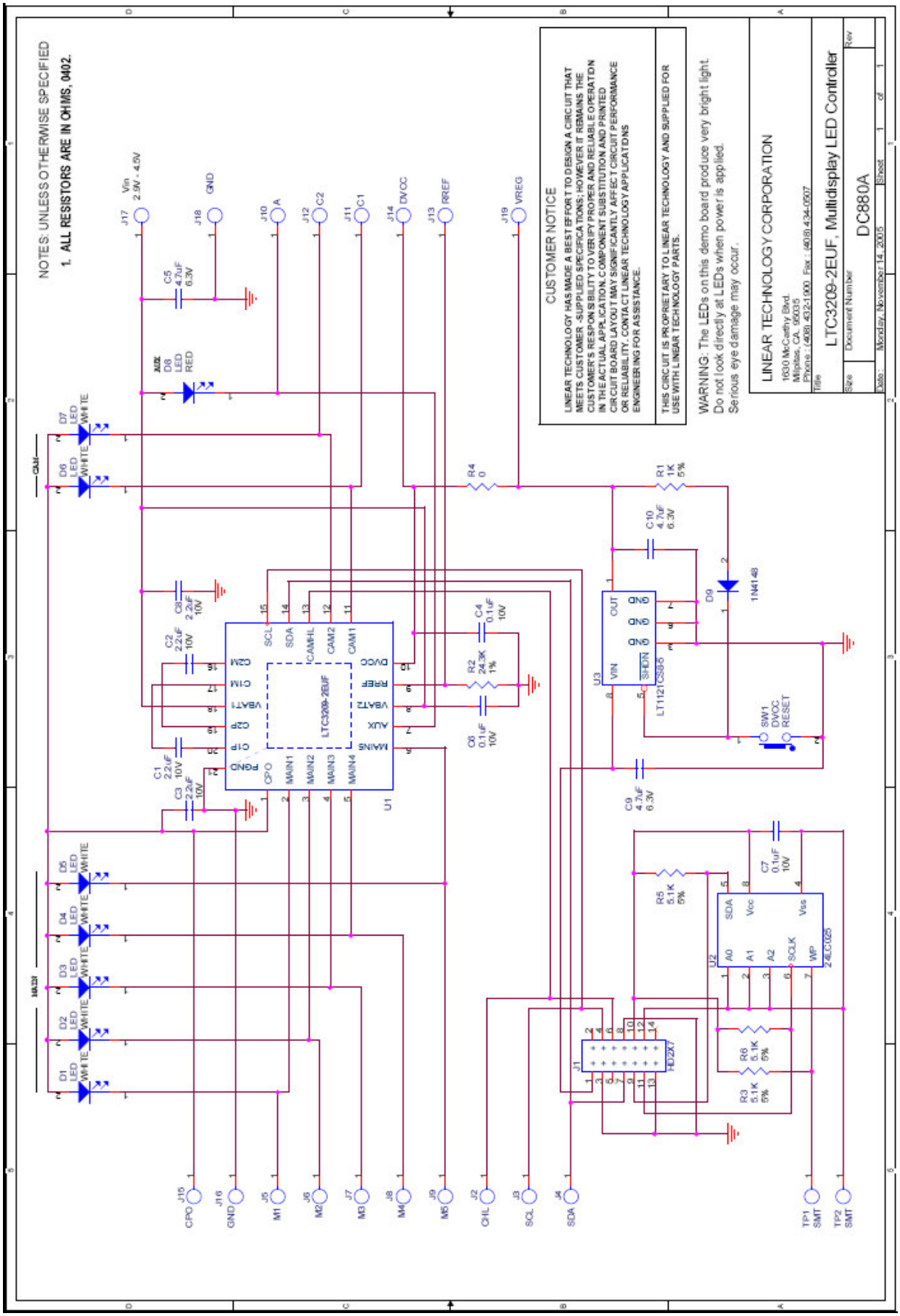
NOTES: UNLESS OTHERWISE SPECIFIED
1. ALL RESISTORS ARE IN OHMS, 0402.
CUSTOMER NOTICE
LINEAR TECHNOLOGY HAS MADE A BEST EFFORT TO DESIGN A CIRCUIT THAT MEETS CUSTOMER -SUPPLIED SPECIFICATIONS; HOWEVER IT REMAINS THE CUSTOMER'S RESPONSIBILITY TO VERIFY PROPER AND RELIABLE OPERATION IN THE ACTUAL APPLICATION. COMPONENT SUBSTITUTION AND PRINTED CIRCUIT BOARD LAYOUT MAY SIGNIFICANTLY AFFECT CIRCUIT PERFORMANCE OR RELIABILITY. CONTACT LINEAR TECHNOLOGY APPLICATIONS ENGINEERING FOR ASSISTANCE.
THIS CIRCUIT IS PROPRIETARY TO LINEAR TECHNOLOGY AND SUPPLIED FOR USE WITH LINEAR TECHNOLOGY PARTS.
WARNING: The LEDs on this demo board produce very bright light. Do not look directly at LEDs when power is applied. Serious eye damage may occur.
LINEAR TECHNOLOGY CORPORATION
1630 McCarthy Blvd.
Milpitas, CA. 95035
Phone : (408) 432-1900 Fax : (408) 434-0507
LTC3209-2EUF, Multidisplay LED Controller
DC880A
Monday, November 14, 2005
LTC3209-2EUF
LT1121CS8-5
24LC025
HDR2X7
1N4148

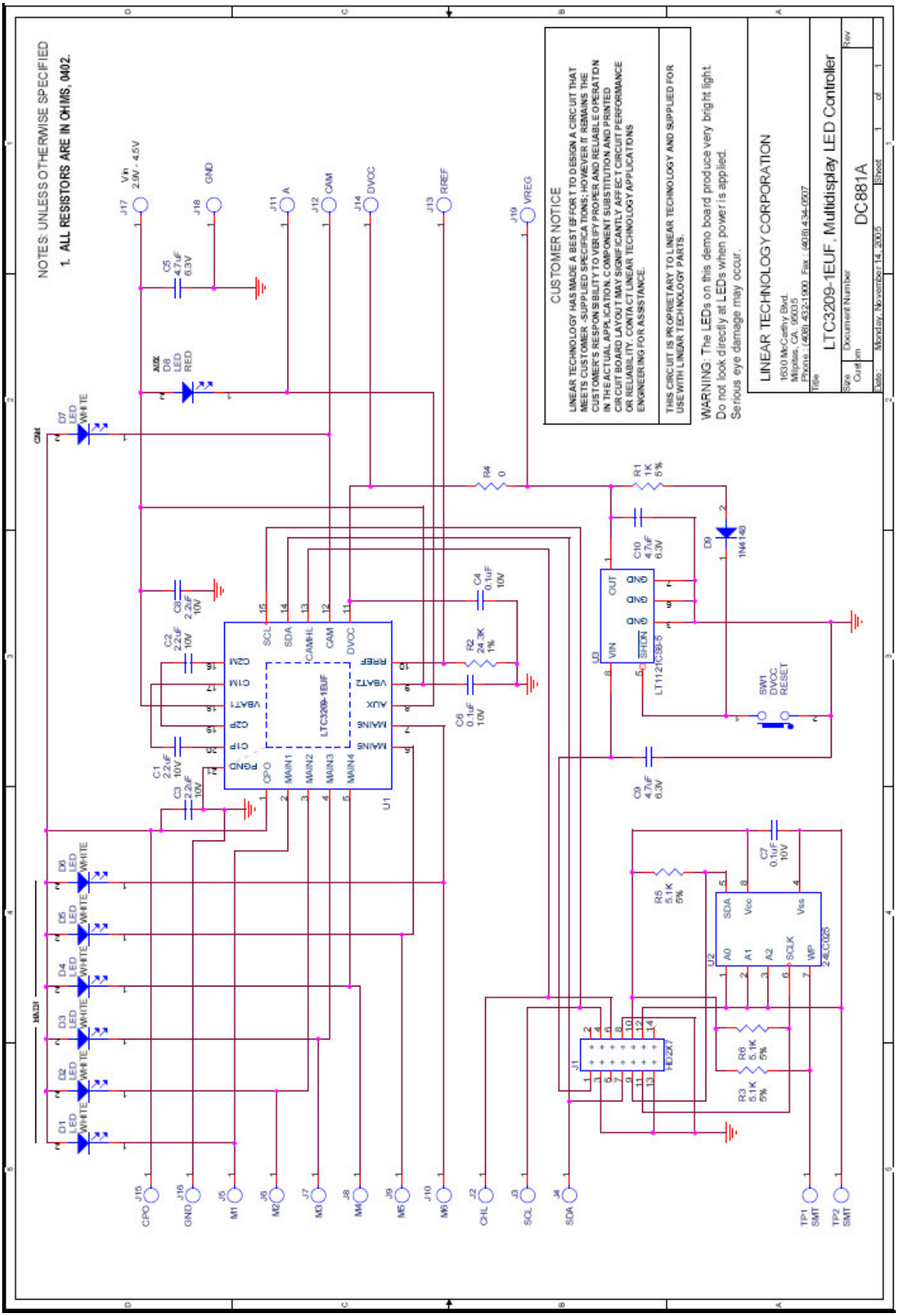
NOTES: UNLESS OTHERWISE SPECIFIED
1. ALL RESISTORS ARE IN OHMS, 0402.
CUSTOMER NOTICE
LINEAR TECHNOLOGY HAS MADE A BEST EFFORT TO DESIGN A CIRCUIT THAT MEETS CUSTOMER -SUPPLIED SPECIFICATIONS; HOWEVER IT REMAINS THE CUSTOMER'S RESPONSIBILITY TO VERIFY PROPER AND RELIABLE OPERATION IN THE ACTUAL APPLICATION. COMPONENT SUBSTITUTION AND PRINTED CIRCUIT BOARD LAYOUT MAY SIGNIFICANTLY AFFECT CIRCUIT PERFORMANCE OR RELIABILITY. CONTACT LINEAR TECHNOLOGY APPLICATIONS ENGINEERING FOR ASSISTANCE.
THIS CIRCUIT IS PROPRIETARY TO LINEAR TECHNOLOGY AND SUPPLIED FOR USE WITH LINEAR TECHNOLOGY PARTS.
WARNING: The LEDs on this demo board produce very bright light. Do not look directly at LEDs when power is applied. Serious eye damage may occur.
LINEAR TECHNOLOGY CORPORATION
1630 McCarthy Blvd.
Milpitas, CA. 95035
Phone : (408) 432-1900 Fax : (408) 434-0507
LTC3209-1EUF, Multidisplay LED Controller
DC881A
Monday, November 14, 2005
LTC3209-1EUF
LT1121CS8-5
24LC025
HDR2X7
Vin 2.9V - 4.5V
GND
A
CAM
DVCC
RREF
VREG
CPO
M1
M2
M3
M4
M5
M6
CHL
SCL
SDA
TP1 SMT
TP2 SMT
SW1 DVCC RESET