THIS DRAWING IS UNPUBLISHED. RELEASED FOR PUBLICATION 2008
© COPYRIGHT 2008 BY - ALL RIGHTS RESERVED.

LOC	DIST
E	B

REVISIONS

P	LTR	DESCRIPTION	DATE	DWN	APVD
	BA1	REVISED PER ECO-11-005150	29MAR2011	RK	HMR

SERIES 36501J, 36501E AS SHOWN

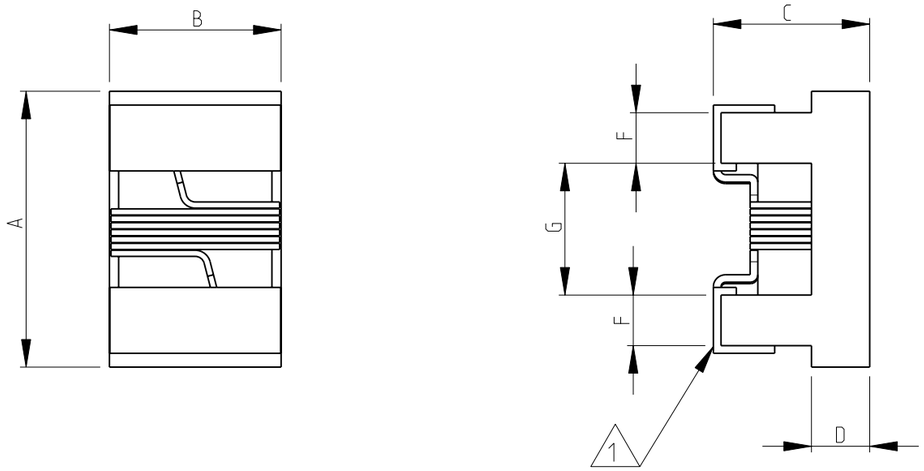

1. TERMINAL WRAPAROUND: 0.007"(0.18mm) APPROX. ON BOTH ENDS
2. AVAILABLE IN 2 DIFFERENT SERIES
3. FOR FURTHER INFORMATION SEE DATA SHEET FOR 3650 SERIES-LOW INDUCTANCE,HIGH FREQUENCY CHIP INDUCTOR

RoHS Compliant

RECOMMENDED LAND PATTERN
FOR 36501J, 36501E SERIES

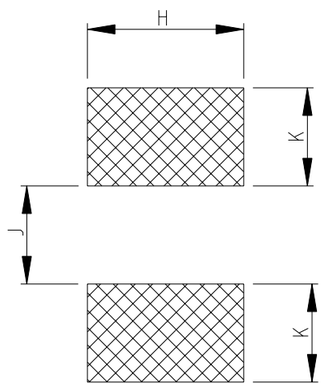

36501E SERIES

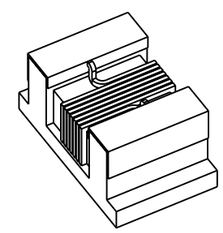

36501J SERIES

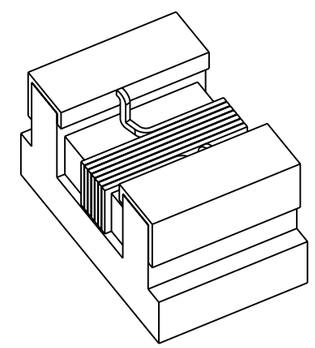

SERIES	A MAX.	B MAX.	C MAX.	D REF.	F	G	H	K	J
36501E	1.27	0.76	0.61	0.15	0.23	0.56	0.66	0.50	0.46
36501J	1.80	1.12	1.02	0.38	0.33	0.86	1.02	0.64	0.64

THIS DRAWING IS A CONTROLLED DOCUMENT.

DIMENSIONS: mm

TOLERANCES UNLESS OTHERWISE SPECIFIED:
0 PLC ± 0.2
1 PLC ± 0.1
2 PLC ± -
3 PLC ± -
4 PLC ± -
ANGLES ± 5°

MATERIAL -
FINISH -

DWN SUBHASH.M 14-NOV-08
CHK PRAKASH.S 14-NOV-08
APVD STEPHEN.P 14-NOV-08
PRODUCT SPEC -
APPLICATION SPEC -
WEIGHT -

TE Connectivity

NAME
LOW INDUCTANCE,
HIGH FREQUENCY CHIP
INDUCTOR SERIES 3650

SIZE	CAGE CODE	DRAWING NO	RESTRICTED TO
A3	00779	C- 1624112	-

CUSTOMER DRAWING | SCALE 20:1 | SHEET 1 OF 1 | REV BA1

1470-19 (3/11)

Pro/ENGINEER DRAWING