MICRO SWITCH
a Honeywell Division
FED.MFG.CODE 91929

PACKET

CATALOG LISTING
19PA184-NT

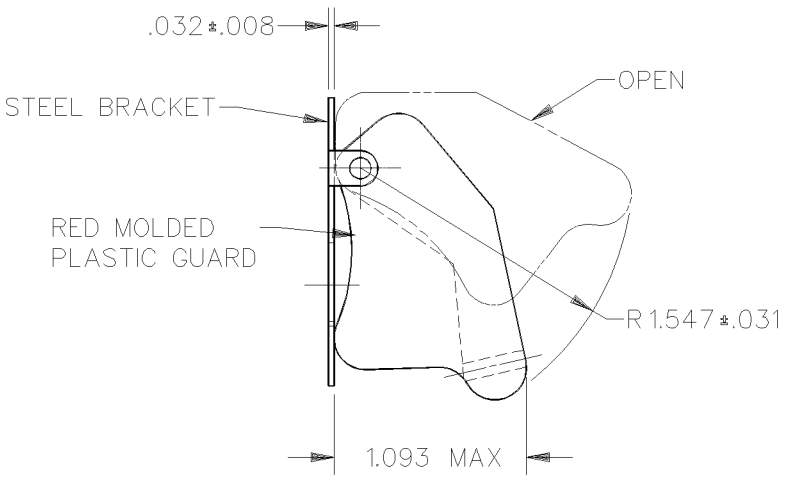

ANSI Y14.5M-1982 APPLIES

THIS DRAWING COVERS A PROPRIETARY ITEM AND IS THE PROPERTY OF MICRO SWITCH, A DIVISION OF HONEYWELL. THIS DRAWING IS NOT TO BE COPIED OR USED WITHOUT THE APPROVAL OF MICRO SWITCH.

THIRD ANGLE PROJECTION

CHARACTERISTICS	ELECTRICAL DATA	SCALE FULL	DO NOT SCALE PRINT
	CONTACT ARRANGEMENT	UNLESS OTHERWISE SPECIFIED TOLERANCES ARE	
		ONE PLACE (.0)	±.030
		TWO PLACE (.00)	±.015
		THREE PLACE (.000)	±.005
		ANGLES	±
		WEIGHT	

CATALOG LISTING 19PA184-NT
RELEASE NO. PR-20912
REPLACES
ISSUE 1
CHECK
REVISIONS
CHECK
CHECK
DRAWN J A L 13 APR 94
DDM/CAD