Series 804 Push-Pull Mighty Mouse Protective Cover Ordering Information

667-202 and 809-198

807-198 Plug Cover

See next page for ordering info

Protect Connectors From Damage – Machined aluminum covers prevent ingress of contamination and water.

Stainless Steel Fittings and Rings – Choose small diameter eye fittings for panel attachment. Larger rings fit under the jam nut or over cable jackets. Split rings can be installed on fully assembled cables.

Polyurethane-Coated SST Wire Rope offers high strength, excellent abrasion resistance and good flexibility. Or, choose Teflon® jacket for high temperature exposure.

Braided Nylon Rope provides excellent flexibility and good abrasion resistance, and can be ordered with slip knot fittings for easy installation on any size cable.

HOW TO ORDER 667-202 RECEPTACLE COVERS

Sample Part Number

667-202	M	9	H	6	-14		R
Series	**Shell Material / Finish**	**Shell Size**	**Attachment Type**	**Attachment Length in Inches**	**Ring Type and Dia. Code**		**Pull Ring Option**
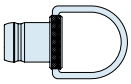 **667-202** Protective Cover for use with Receptacle Connectors	**C** Aluminum / Black Anodize (Non-Conductive) RoHS Compliant **M** Aluminum / Electroless Nickel RoHS Compliant **NF** Aluminum / Cadmium with Olive Drab Chromate **ZN** Aluminum / Zinc-Nickel with Olive Drab Chromate **ZNU** Aluminum / Zinc-Nickel with Black Chromate **MT** Aluminum / Nickel-PTFE RoHS Compliant **Z1** Stainless Steel / Passivated RoHS Compliant	**5** **6** **7** **8** **9** **10** **12** **14**	**G** Nylon Rope **H** SST Wire Rope, Teflon® Jacket **N** No Attachment **S** SST Sash Chain **SK** Nylon Rope With Slip Knot **T** SST Wire Rope, No Jacket **U** SST Wire Rope, Polyurethane Jacket "SST" = Stainless Steel	Omit for attachment Type **N** (No Attachment) **Example** "-6" equals six inch length	Omit for attachment Types **N** (No Attachment) and **SK** (Slip Knot)		Omit for None **R** Supplied With Pull Ring 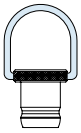
					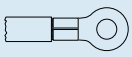 Small Ring	**-01**– .126 (3.20) I.D. **-02**– .145 (3.68) I.D. **-04**– .188 (4.78) I.D. **-06**– .197 (5.00) I.D.	
					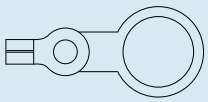 Large Ring	**-14**– .385 (9.78) I.D. **-15**– .445 (11.30) I.D. **-16**– .570 (14.48) I.D. **-17**– .635 (16.13) I.D. **-18**– .695 (17.65) I.D. **-19**– .885 (22.48) I.D. **-20**– 1.070 (27.17) I.D. **-21**– 1.135 (28.83) I.D.	
					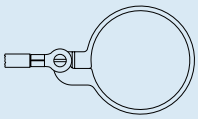 Split Ring	**-50**– .420 (10.67) I.D. **-52**– .480 (12.19) I.D. **-54**– .635 (16.13) I.D. **-56**– .745 (18.92) I.D. **-58**– .885 (22.48) I.D. **-60**– 1.010 (25.65) I.D. **-64**– 1.125 (28.58) I.D. **-68**– 1.345 (34.16) I.D.	

Dimensions in inches (millimeters) and are subject to change without notice.

© 2010 Glenair, Inc.

CAGE Code 06324

Printed in U.S.A.

GLENAIR, INC. • 1211 AIR WAY • GLENDALE, CA 91201-2497 • 818-247-6000 • FAX 818-500-9912

www.glenair.com

E-Mail: sales@glenair.com

Series 804 Push-Pull Mighty Mouse Protective Cover Ordering Information

809-198 Plug Covers

HOW TO ORDER 809-198 PLUG COVERS

Sample Part Number

809-198	M	12	H	6	-14	
Series	**Shell Material / Finish**	**Shell Size**	**Attachment Type**	**Attachment Length in Inches**	**Ring Type and Dia. Code**	**Shell Key Position**
 809-198 Protective Cover for use with Plug Connectors	**C** Aluminum / Black Anodize (Non-Conductive) RoHS Compliant **M** Aluminum / Electroless Nickel RoHS Compliant **NF** Aluminum / Cadmium with Olive Drab Chromate **ZN** Aluminum / Zinc-Nickel with Olive Drab Chromate **ZNU** Aluminum / Zinc-Nickel with Black Chromate **MT** Aluminum / Nickel-PTFE RoHS Compliant **Z1** Stainless Steel / Passivated RoHS Compliant	**5** **6** **7** **8** **9** **10** **12** **14**	**G** Nylon Rope **H** SST Wire Rope, Teflon® Jacket **N** No Attachment **S** SST Sash Chain **SK** Nylon Rope With Slip Knot **T** SST Wire Rope, No Jacket **U** SST Wire Rope, Polyurethane Jacket "SST" = Stainless Steel	Omit for attachment Type **N** (No Attachment) **Example** "-6" equals six inch length	Omit for attachment Types **N** (No Attachment) and **SK** (Slip Knot) 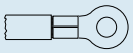 Small Ring **-01**– .126 (3.20) I.D. **-02**– .145 (3.68) I.D. **-04**– .188 (4.78) I.D. **-06**– .197 (5.00) I.D. 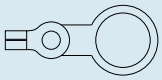 Large Ring **-08**– .510 (13.0) I.D. **-10**– .766 (19.4) I.D. **-12**– 1.015 (25.8) I.D. **-14**– .385 (9.78) I.D. **-15**– .445 (11.30) I.D. **-16**– .570 (14.48) I.D. **-17**– .635 (16.13) I.D. **-18**– .695 (17.65) I.D. **-19**– .885 (22.48) I.D. **-20**– 1.070 (27.17) I.D. **-21**– 1.135 (28.83) I.D. **-25**– .820 (20.8) I.D. 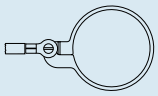 Split Ring **-50**– .420 (10.67) I.D. **-52**– .480 (12.19) I.D. **-54**– .635 (16.13) I.D. **-56**– .745 (18.92) I.D. **-58**– .885 (22.48) I.D. **-60**– 1.010 (25.65) I.D. **-64**– 1.125 (28.58) I.D. **-68**– 1.345 (34.16) I.D.	**Omit** for Single Master Key **A** Pos. A (Normal) **B** Pos. B **C** Pos. C **D** Pos. D

G

Dimensions in inches (millimeters) and are subject to change without notice.

© 2010 Glenair, Inc.
CAGE Code 06324
Printed in U.S.A.

GLENAIR, INC. • 1211 AIR WAY • GLENDALE, CA 91201-2497 • 818-247-6000 • FAX 818-500-9912
www.glenair.com
E-Mail: sales@glenair.com

Rev. 23-FEBRUARY-2011

Series 804 Push-Pull Mighty Mouse Protective Receptacle Cover Information

667-202

Attaching a 667-202 Receptacle Cover to a Front Panel Mounted Jam Nut Receptacle

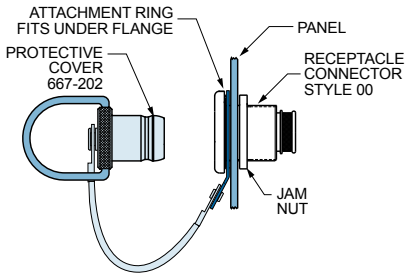

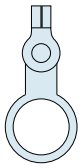

Solid Ring

Dia. Code	Shell Size	Conn. Thread Ref	Ring I.D.		Ring O.D.	
			In.	mm.	In.	mm.
08	5	.5000-32	.510	13.0	.620	15.7
16	6	.5625-28	.570	14.5	.690	17.5
18	7, 8	.6875-28	.695	17.7	.820	20.8
10	9	.7500-28	.766	19.4	.890	22.6
25	10	.8125-28	.820	20.8	.940	23.9
12	12	1.000-28	1.015	25.8	1.200	30.5
20	14	1.062-20	1.070	27.2	1.200	30.5
21	15	1.125-28	1.135	28.8	1.250	31.8

Attaching a 667-202 Receptacle Cover to a Rear Panel Mounted Jam Nut Receptacle

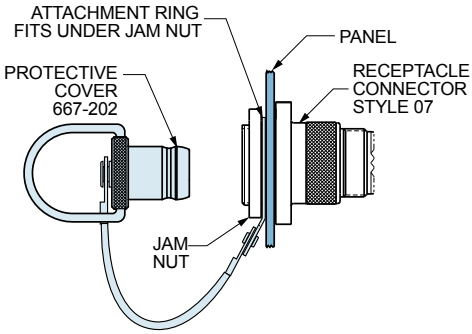

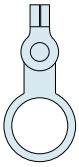

Solid Ring

Dia. Code	Shell Size	Conn. Thread Ref	Ring I.D.		Ring O.D.	
			In.	mm.	In.	mm.
			± .010	±0.25	± .015	± 0.38
15	5	.4375-32	.445	11.3	.570	14.5
08	6	.5000-32	.510	13.0	.620	15.7
17	7, 8	.6250-28	.635	16.1	.760	19.3
18	9	.6875-28	.695	17.7	.820	20.8
10	10	.7500-28	.766	19.4	.890	22.6
19	12	.8750-28	.885	22.5	1.010	25.7
12	14	1.000-28	1.015	25.8	1.200	30.5

Attaching a 667-202 Receptacle Cover to a Panel With a Screw

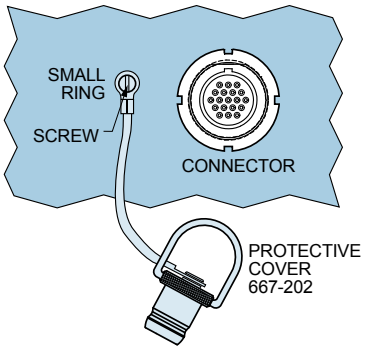

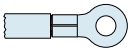

Small Ring for Attaching Receptacle Covers to a Panel with a Screw

Dia. Code	Screw Size	Ring I.D.		Ring O.D.	
		In.	mm.	In.	mm.
		±.005	±0.13	Max.	Max.
01	#4, M3	.126	3.20	.31	7.9
02	#6	.145	3.68	.31	7.9
04	#8, M4	.188	4.78	.31	7.9
06	#10	.197	5.00	.31	7.9

Dimensions in inches (millimeters) and are subject to change without notice.

© 2010 Glenair, Inc.

CAGE Code 06324

Printed in U.S.A.

Series 804 Push-Pull Mighty Mouse Protective Plug Cover Information

809-198 and 667-202

Attaching a Cover to a Cable Assembly With a Solid Ring

Install cover onto the back of the connector before overmolding or backshell installation.

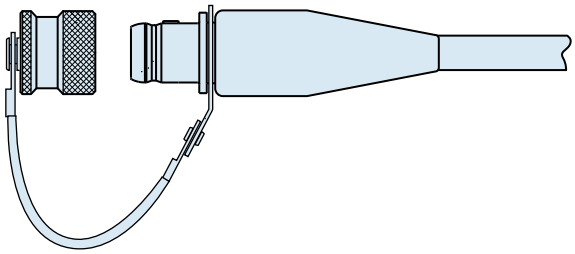

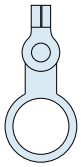

Solid Ring

Dia. Code	Shell Size	Ring I.D.		Ring O.D.	
		In.	mm.	In.	mm.
		± .010	±0.25	± .015	± 0.38
14	5,6	.385	9.78	.510	12.95
15	7	.445	11.30	.565	14.35
16	8, 9	.570	14.48	.685	17.40
18	10, 12	.695	17.65	.820	20.82
20	14	1.070	27.17	1.195	30.35

Attaching a Cover to a Cable Using a Split Ring or Slip Knot

Split rings can be installed onto finished cables.

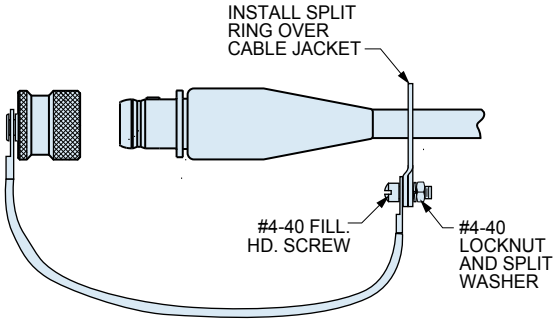

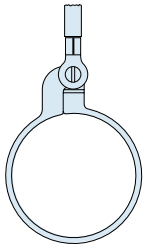

Large Split Ring for Attaching Covers to Cables

Dia. Code	Max. Cable Dia. (in.)	Ring Diameter			
		Min. ID		Max. OD	
		In.	mm.	In.	mm.
50	.410	.420	10.67	.580	14.73
52	.470	.480	12.19	.640	16.26
54	.625	.635	16.13	.796	20.22
56	.735	.745	18.92	.905	22.99
58	.875	.885	22.48	1.046	26.57
60	1.000	1.010	25.65	1.171	29.74
64	1.115	1.125	28.58	1.285	32.64
68	1.335	1.345	34.16	1.505	38.23

Dimensions in inches (millimeters) and are subject to change without notice.

© 2010 Glenair, Inc.

CAGE Code 06324

Printed in U.S.A.

GLENAIR, INC. • 1211 AIR WAY • GLENDALE, CA 91201-2497 • 818-247-6000 • FAX 818-500-9912

www.glenair.com

E-Mail: sales@glenair.com

Rev. 01-JANUARY-2010

Series 804 Push-Pull Mighty Mouse Protective Plug and Receptacle Cover Dimensions

809-198 and 667-202

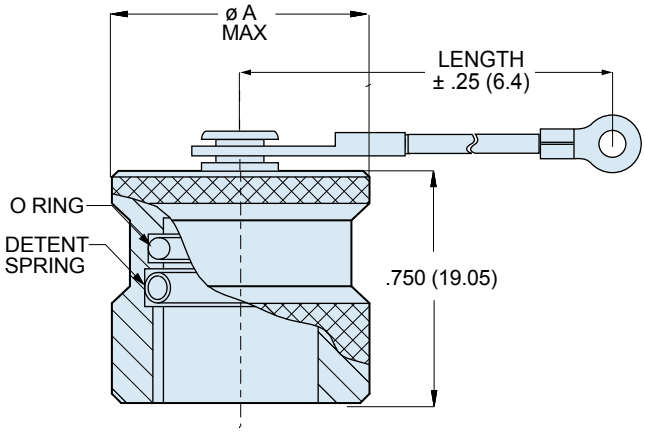

809-198 Plug Cover

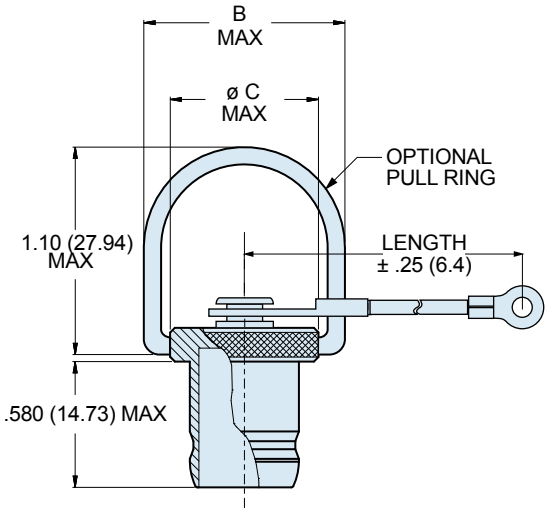

667-202 Receptacle Cover

Shell Size	Ø A Max.		Ø B Max.		Ø C Max.	
	In	mm	In	mm	In	mm
5	.496	12.60	.740	18.80	.490	12.45
6	.540	13.72	.740	18.80	.490	12.45
7	.645	16.38	.820	20.83	.570	14.48
8	.665	16.89	.870	22.10	.619	15.72
9	.720	18.29	.920	23.37	.670	17.02
10	.790	20.07	1.030	26.16	.783	19.89
12	.915	23.24	1.110	28.19	.860	21.84
14	1.040	26.42	1.230	31.24	.980	24.89

MATERIALS AND FINISHES	
Cover	Aluminum alloy or stainless steel
O-ring	Fluorosilicone rubber
Wire,Hardware	Stainless steel, passivated

LANYARD OPTIONS	
Nylon Rope	-55° to +100°C., black, very flexible, very good abrasion resistance, good resistance to fuels, .120" (3mm) diameter
Polyurethane Coated Wire Rope	Black polyurethane over stainless steel rope, -55° to +125°C., very flexible, excellent abrasion resistance, excellent resistance to fuels, .080" (2mm) diameter
Teflon® Jacketed Wire Rope	Translucent FEP jacket over stainless steel, -55° to +200°C., fair flexibility, good abrasion resistance, .100" diameter
Sash Chain	Stainless steel, #8 chain, .240" (6mm)
Slip Knot (SK) for Attaching Covers to Cable	55° to +100°C., black, very flexible, very good abrasion resistance, good resistance to fuels, .120" (3mm) diameter. Length includes .5" (13mm) diameter loop.

Dimensions in inches (millimeters) and are subject to change without notice.

© 2010 Glenair, Inc.
CAGE Code 06324
Printed in U.S.A.

GLENAIR, INC. • 1211 AIR WAY • GLENDALE, CA 91201-2497 • 818-247-6000 • FAX 818-500-9912
www.glenair.com **E-Mail: sales@glenair.com**