THIS DRAWING IS UNPUBLISHED. RELEASED FOR PUBLICATION 20
© COPYRIGHT 20 BY - ALL RIGHTS RESERVED.

REVISIONS

P	LTR	DESCRIPTION	DATE	DWN	APVD
	CB	REVISED PER ECO-13-012231	29JUL2013	DLD	WTW
	CC	REVISED PER ECO-14-005842	14MAY2014	DLD	WTW
	CD	REVISED PER ECO-14-017635	21NOV2014	DLD	WTW

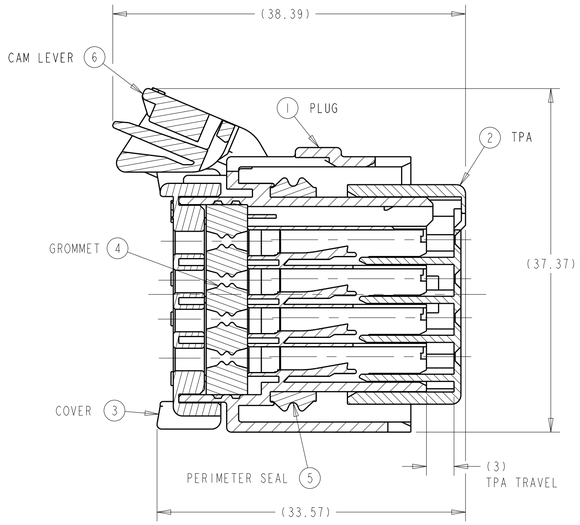

SECTION A-A
SHOWN WITH CAM LEVER
AND TPA IN THEIR
PRE-LOADED POSITIONS
(DELIVERY CONDITION)

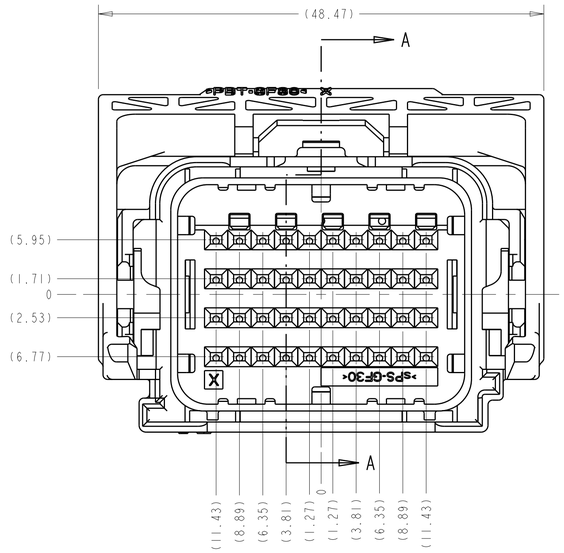

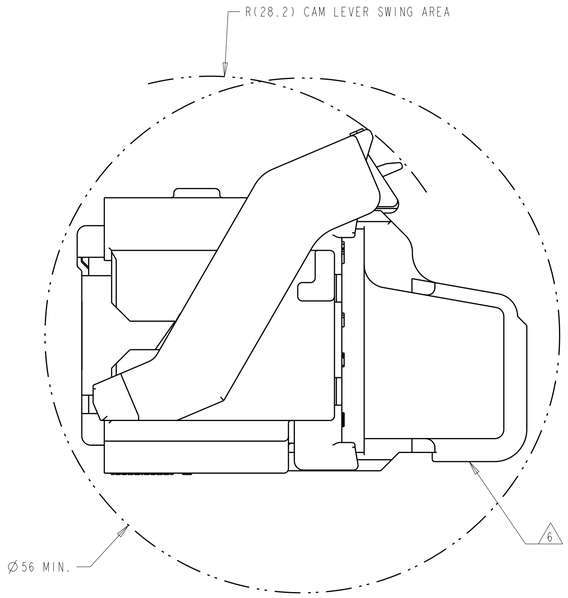

MINIMUM FEED THROUGH CONDITION
WITH 1mm CLEARANCE ALL AROUND
SHOWN WITH OPTION WIRESHIELD
TPA IS IN IT'S LOADED POSITION
CAM LEVER IS IN IT'S PRE-LOADED POSITION

KEYING OPTIONS
SCALE 2:1

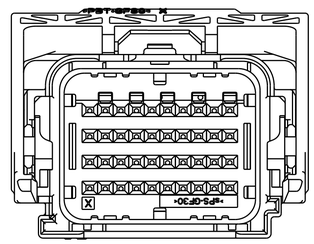

OPTION "G"

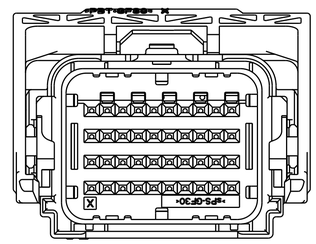

OPTION "H"

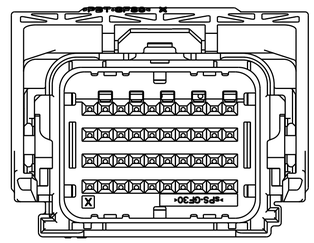

OPTION "J"

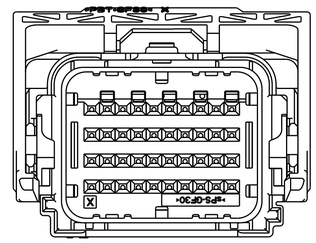

OPTION "K"

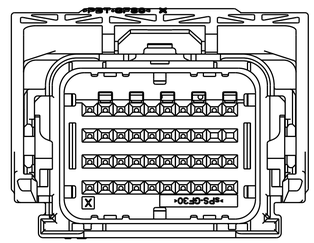

OPTION "L"

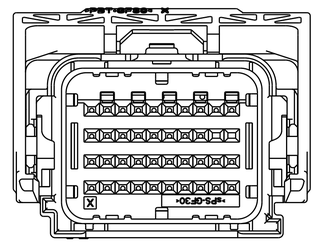

OPTION "M"

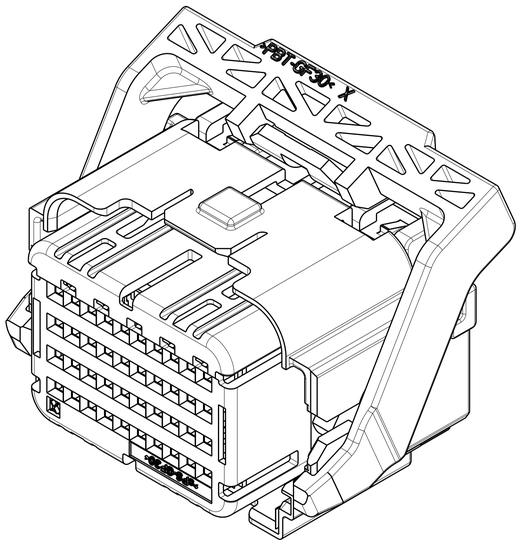

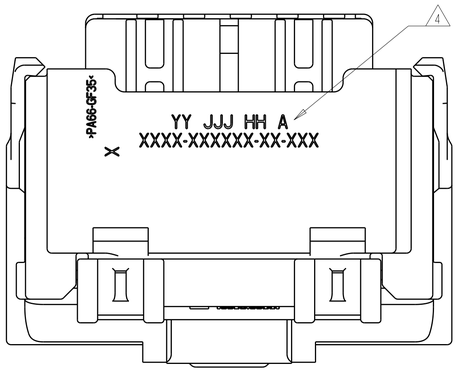

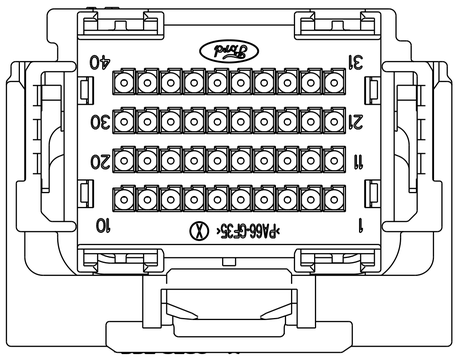

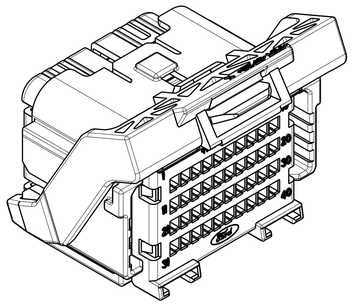

SCALE 2:1

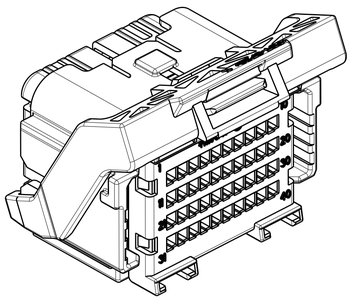

THIS VIEW SHOWS THE
OPTIONAL CAM LEVER

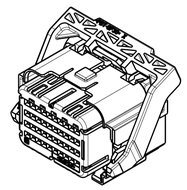

SCALE 1:1

1. APPLICABLE TERMINAL PART NUMBERS (SOLD SEPARATELY):
   FOR TIN APPLICATIONS: 1393367 AND 1393366.
   FOR GOLD APPLICATIONS: 1393365 AND 1393364.
   FOR TERMINATION AND REELING OPTIONS
   SEE DRAWINGS 1393367, 1393366, 1393365, AND 1393364.

2. COMPATIBLE WIRE SIZES FOR MAT SEAL DESIGN 1.19 TO 2.06 O.D.
   (22-18 AWG, 0.35-0.75 mm2)

3. TPA AND CAM LEVER ARE SHIPPED IN THEIR PRE-LOADED POSITION.
   ALL ASSEMBLIES ARE TO BE TRAY PACKAGED.

4. CUSTOMER PART NUMBER AND TRACEABILITY CODE (YY = TWO DIGIT YEAR,
   JJJ = JULIAN DAY, HH = TWO DIGIT MILITARY HOUR, A = ASSEMBLY PROCESS
   USED) ARE PRINTED IN THIS LOCATION.

5. PART ASSEMBLY WEIGHT WITHOUT TERMINALS AND WITH STANDARD PIN-OUT
   CONFIGURATION IS 24.71 GRAMS.

6. OPTIONAL WIRESHIELD P/N 8-1419157-8 (SOLD SEPARATELY). PLEASE CONTACT
   YOUR TE SALES REPRESENTATIVE FOR AVAILABILITY AND PRICING.

KEYING OPTION "G" SHOWN
SEE SHEET 2 FOR BILL OF
MATERIAL AND PIN-OUT CHARTS

THIS DRAWING IS A CONTROLLED DOCUMENT.

DIMENSIONS: mm

TOLERANCES UNLESS OTHERWISE SPECIFIED:
0 PLC ±-
1 PLC ±0.3
2 PLC ±0.10
3 PLC ±-
4 PLC ±-
ANGLES ±3°

MATERIAL: SEE CHART ON SHEET 2
FINISH: - / -

DWN M. FORISKA 19APR2002
CHK M. FORISKA 19APR2002
APVD A. VALASEK 19APR2002
PRODUCT SPEC -
APPLICATION SPEC -
WEIGHT SEE NOTE 5

TE Connectivity

NAME: 40 WAY ARM, PLUG ASSEMBLY WITHOUT SHORTING BARS, CUSTOMER SPEC.

SIZE	CAGE CODE	DRAWING NO	RESTRICTED TO
A1	00779	C-8-1419157-7	-

CUSTOMER DRAWING | SCALE 3:1 | SHEET 1 OF 5 | REV CD

4805 (3/13)

THIS DRAWING IS UNPUBLISHED. RELEASED FOR PUBLICATION 20
© COPYRIGHT 20 BY - ALL RIGHTS RESERVED.

REVISIONS

P	LTR	DESCRIPTION	DATE	DWN	APVD
	-	SEE SHEET 1	-	-	-

ASSEMBLY PART NUMBERS

4-1925313-8	4-1925313-7	4-1925313-6	4-1925313-5	4-1925313-4	4-1925313-3	4-1925313-2	4-1925313-1	4-1925313-0	3-1925313-9	3-1925313-8	3-1925313-7	3-1925313-6	3-1925313-5	3-1925313-4	3-1925313-3	3-1925313-2	3-1925313-1	3-1925313-0	2-1925313-9	2-1925313-8	2-1925313-7	2-1925313-6	2-1925313-5	2-1925313-4	2-1925313-3	2-1925313-2	2-1925313-1	2-1925313-0	1-1925313-9	1-1925313-8	1-1925313-7	1-1925313-6	1-1925313-5	1-1925313-4	1-1925313-3	1-1925313-2	1-1925313-1	1-1925313-0	1925313-9	1925313-8	1925313-7	1925313-6	1925313-5	1925313-4	1925313-3	1925313-2	1925313-1	1438679-1	1438620-1		1438619-1		1438618-2	1438618-1		1438617-1	ITEM	DESCRIPTION	MATERIAL	FINISH/COLOR

THIS DRAWING IS UNPUBLISHED. RELEASED FOR PUBLICATION 20
© COPYRIGHT 20 BY - ALL RIGHTS RESERVED.

REVISIONS

P	LTR	DESCRIPTION	DATE	DWN	APVD
	-	SEE SHEET 1	-	-	-

ASSEMBLY PART NUMBERS

2138987-2	2138987-1	2098034-1	1-1438435-6	1-1438435-5	1-1438435-4	1-1438435-3	1-1438435-2	1-1438435-1	1-1438435-0	1438435-9	1438435-8	1438435-7	1438435-6	1438435-5	1438435-4	1438435-3	1438435-2	1438435-1	ITEM	DESCRIPTION	MATERIAL	FINISH/COLOR
1	1		1	1	1	1	1	1	1	1	1	1	1	1	1	1	1	1	6	CAM LEVER	PBT 30% GF	GRAY
		1																	6	CAM LEVER WITH MODIFIED TAB	PA66 35% GF	GRAY
																			6	CAM LEVER WITH MODIFIED TAB	PBT 30% GF	GRAY
1	1	1	1	1	1	1	1	1	1	1	1	1	1	1	1	1	1	1	5	PERIMETER SEAL	SILICONE	GREEN
1	1	1	1	1	1	1	1	1	1	1	1	1	1	1	1	1	1	1	4	GROMMET	SILICONE	BROWN
1	1	1	1	1	1	1	1	1	1	1	1	1	1	1	1	1	1	1	3	COVER	PA66 35% GF	BLACK
		1																	2	TPA FOR NON-SHORTING BAR APPLICATIONS	sPS 30% GF	NATURAL
1	1		1	1	1	1	1	1	1	1	1	1	1	1	1	1	1	1	2	TPA FOR NON-SHORTING BAR APPLICATIONS	sPS 30% GF	RED
																			1	PLUG WITH KEYING OPTION "K" AND 5 SHORTING BAR POSITIONS CONFIGURATION	PA66 35% GF	BLACK
			1	1	1	1	1	1	1	1	1	1	1	1	1	1	1	1	1	PLUG WITH KEYING OPTION "L" AND 5 SHORTING BAR POSITIONS CONFIGURATION	PA66 35% GF	BLACK
																			1	PLUG WITH KEYING OPTION "J" AND 5 SHORTING BAR POSITIONS CONFIGURATION	PA66 35% GF	BLACK
		1																	1	PLUG WITH KEYING OPTION "H" AND 5 SHORTING BAR POSITIONS CONFIGURATION	PA66 35% GF	BLACK
1	1																		1	PLUG WITH KEYING OPTION "G" AND 5 SHORTING BAR POSITIONS CONFIGURATION	PA66 35% GF	BLACK

QUANTITY

THIS DRAWING IS A CONTROLLED DOCUMENT.

DIMENSIONS: mm

TOLERANCES UNLESS OTHERWISE SPECIFIED:
0 PLC ±-
1 PLC ±0.3
2 PLC ±0.10
3 PLC ±-
4 PLC ±-
ANGLES ±3°

MATERIAL: SEE CHART ON SHEET 2
FINISH: - / -

DWN M. FORISKA 19APR2002
CHK M. FORISKA 19APR2002
APVD A. VALASEK 19APR2002
PRODUCT SPEC -
APPLICATION SPEC -
WEIGHT -

TE Connectivity

NAME: 40 WAY ARM, PLUG ASSEMBLY WITHOUT SHORTING BARS, CUSTOMER SPEC.

SIZE	CAGE CODE	DRAWING NO	RESTRICTED TO
A1	00779	C-8-1419157-7	-

CUSTOMER DRAWING | SCALE 3:1 | SHEET 3 OF 5 | REV CD

4805 (3/13)

THIS DRAWING IS UNPUBLISHED. RELEASED FOR PUBLICATION 20
© COPYRIGHT 20 BY - ALL RIGHTS RESERVED.

REVISIONS

P	LTR	DESCRIPTION	DATE	DWN	APVD
	-	SEE SHEET 1	-	-	-

PIN-OUT CHART

| | | |

THIS DRAWING IS UNPUBLISHED. RELEASED FOR PUBLICATION 20
© COPYRIGHT 20 BY - ALL RIGHTS RESERVED.

REVISIONS

P	LTR	DESCRIPTION	DATE	DWN	APVD
	-	SEE SHEET 1	-	-	-

PIN-OUT CHART

1	2	3	4	5	6	7	8	9	10	11	12	13	14	15	16	17	18	19	20	21	22	23	24	25	26	27	28	29	30	31	32	33	34	35	36	37	38	39	40	ASSEMBLY PART NUMBER	PLUG KEYING OPTION
		3	4	5	6							13	14	15	16					21	22	23	24									33		35	36	37	38	39		2138987-2	KEY "G"
																																								2138987-1	KEY "G"

TERMINAL HOLE POSITION

CAVITIES WITH A NUMERIC SYMBOL INDICATE
CLOSED TERMINAL HOLE POSITIONS
BLANK CAVITIES INDICATE
OPEN TERMINAL HOLE POSITIONS

THIS DRAWING IS A CONTROLLED DOCUMENT.

DIMENSIONS: mm

TOLERANCES UNLESS OTHERWISE SPECIFIED:
0 PLC ±-
1 PLC ±0.3
2 PLC ±0.10
3 PLC ±-
4 PLC ±-
ANGLES ±3°

MATERIAL: SEE CHART ON SHEET 2

FINISH: - / -

DWN M. FORISKA 19APR2002
CHK M. FORISKA 19APR2002
APVD A. VALASEK 19APR2002

PRODUCT SPEC: -
APPLICATION SPEC: -
WEIGHT: -

TE Connectivity

NAME: 40 WAY ARM, PLUG ASSEMBLY WITHOUT SHORTING BARS, CUSTOMER SPEC.

SIZE	CAGE CODE	DRAWING NO	RESTRICTED TO
A1	00779	C-8-1419157-7	-

CUSTOMER DRAWING | SCALE 3:1 | SHEET 5 OF 5 | REV CD

4805 (3/13)