samtec

PCI EXPRESS®

(1.00 mm) .0394"

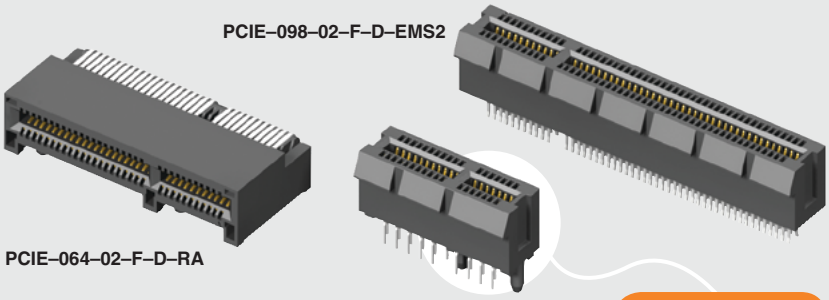

PCIE SERIES

PCI EXPRESS® CARD SOCKETS

SPECIFICATIONS

For complete specifications and recommended PCB layouts see www.samtec.com?PCIE

Insulator Material:
–TH=Black Nylon
–EMS2 & –RA=LCP
Contact:
Phosphor Bronze
Plating:
Au or Sn over
50 µ" (1.27 µm) Ni
Current Rating:
2.2 A per pin
(2 adjacent pins powered)
Operating Temp:
-55 °C to +125 °C
Card Insertion Depth:
(7.65 mm) .301" nominal
RoHS Compliant:
Yes
Lead–Free Solderable:
–RA & –EMS2=Yes
–TH=Wave only

Card Mates:
(1.60 mm) .062" card

Cable Mates:
PCIEC

Note:
While optimized for 50 Ω applications, this connector with alternative signal/ground patterns may also perform well in certain 75 Ω applications.

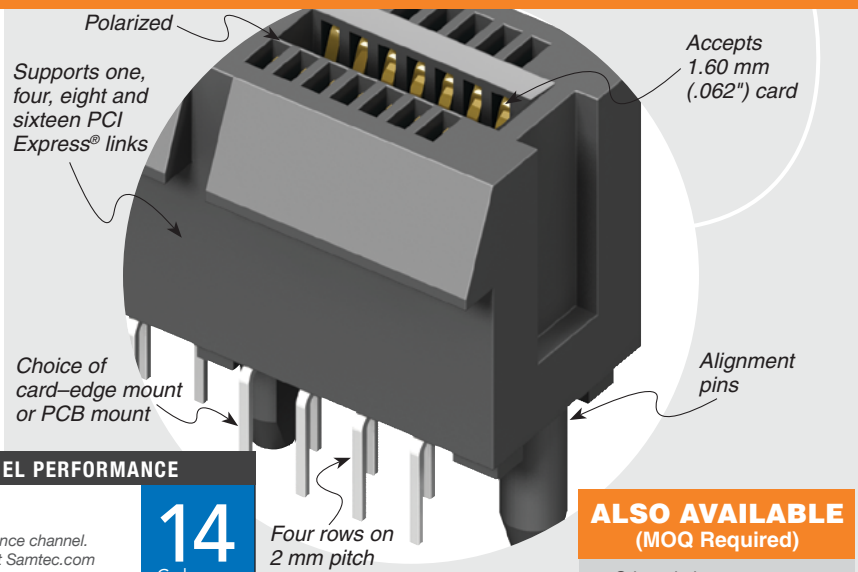

HIGH-SPEED CHANNEL PERFORMANCE

PCIE

Rating based on Samtec reference channel. For full SI performance data visit Samtec.com or contact SIG@samtec.com

14 Gbps

ALSO AVAILABLE (MOQ Required)

- Other platings

RECOGNITIONS

For complete scope of recognitions see www.samtec.com/quality

FILE NO. E111594

OTHER SOLUTIONS

PCI Express® Jumpers & Extenders call for PCIEC Series

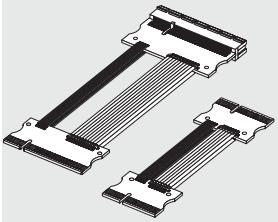

- Loop back Extender (From one PCIe® slot to another PCIe® slot)
- Ser-Des Physical Extender (From one PCIe® slot to another PCIe® Ser-Des)
- Physical Extender for easy troubleshooting of PCIe® card debug and analysis (PCIe® slot to Emulator or Analyzer)

PCI-SIG®, PCI Express® and the PCIe® design marks are registered trademarks and/or service marks of PCI-SIG.

Note:
Some lengths, styles and options are non-standard, non-returnable.

PCIE	–	NO. OF POSITIONS	–	02	–	PLATING OPTION	–	D	–	TAIL OPTION
		–036, –064, –098, –164				–F = Gold flash on contact, Tin on tail				–EMS2 = Edge Mount –TH = Through-hole –RA = Right-angle

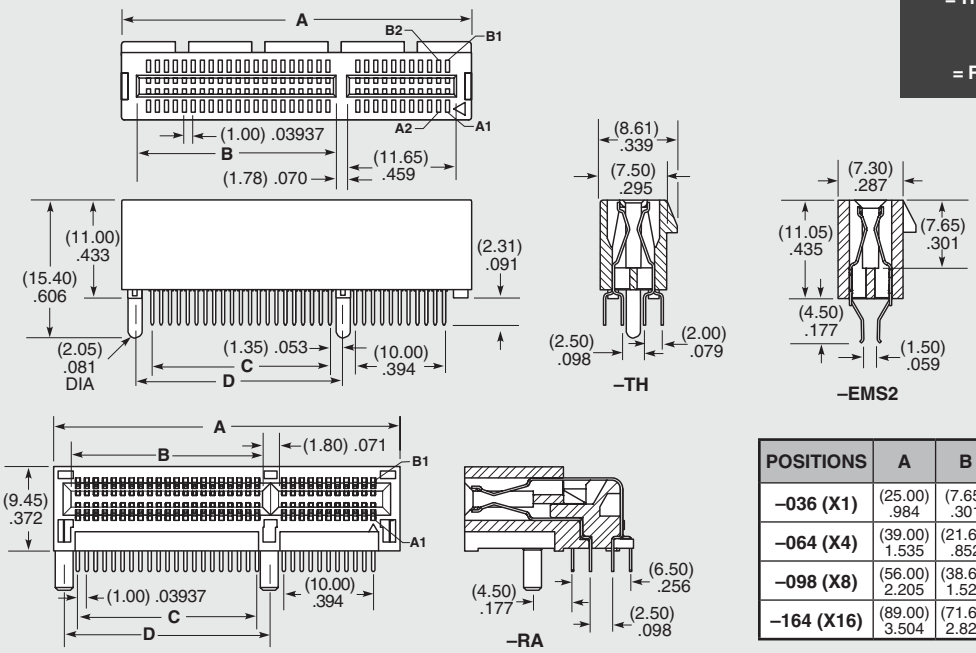

POSITIONS	A	B	C	D
–036 (X1)	(25.00) .984	(7.65) .301	(6.00) .236	(9.15) .360
–064 (X4)	(39.00) 1.535	(21.65) .852	(20.00) .787	(23.15) .911
–098 (X8)	(56.00) 2.205	(38.65) 1.522	(37.00) 1.457	(40.15) 1.581
–164 (X16)	(89.00) 3.504	(71.65) 2.821	(70.00) 2.756	(73.15) 2.880

Due to technical progress, all designs, specifications and components are subject to change without notice.

All parts within this catalog are built to Samtec's specifications.
Customer specific requirements must be approved by Samtec and identified in a Samtec customer-specific drawing to apply.