NOTES:

1. ELECTRICAL SPECIFICATIONS:
   C.F. = 499.25 MHz
   INSERTION LOSS @ C.F. = 3.5 dB MIN, 5.5 dB MAX
   3 dBc BANDWIDTH: 5 MHz ±1 MHz (REFERENCE ONLY)
   (5) VSWR @ C.F. = 2:1 MAX
   IMPEDANCE: 75 OHMS IN/OUT
   RIPPLE = 0.25 dB MAX WITHIN ±0.5 MHz OF C.F.
   ATTENUATION:
      18 dBc MIN @ C.F. ±5.8 MHz
      28 dBc MIN @ C.F. ±12.0 MHz
      45 dBc MIN @ C.F. ±18.0 MHz
2. ENVIRONMENTAL SPECIFICATIONS:
   OPERATING TEMPERATURE: −40° TO +85° C
   STORAGE TEMPERATURE: −40° TO +90° C

REVISIONS

REV	DESCRIPTION	DATE	APPROVED
0	CHANGED PER CN 12123	–	GL
1	CHANGED PER CN 99309	–	GL
2	CHANGED PER CN 99311	–	GL
3	CHANGED PER CN 99396	–	GL
4	REDRAWN PER ECN05787, MY, 7/31/06	8/01/06	MP
5	CHANGED VSWR SPEC PER ECN06583, MY, 7/18/08	7/18/08	CR
6	CHANGED SHLD DIM PER ECN06642, MY, 9/08/08	9/08/08	FG

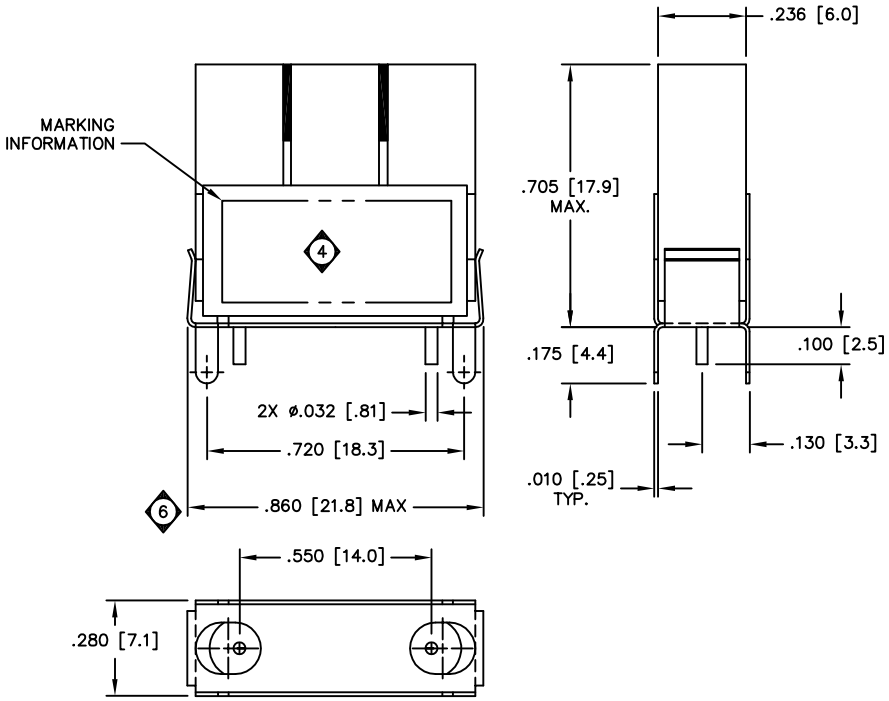

UNLESS OTHERWISE SPECIFIED
ALL DIMENSIONS ARE IN INCHES
DIMENSIONS APPLY AFTER PLATING
INTERPRET DIM. AND TOL. PER
ASME Y14.5M – 1994
TOLERANCES:
.XX±.01 .XXX±.005 ∠ ±.50°
BREAK ALL SHARP EDGES AND DEBURR

DRAWN	M.YAKER	7/31/06
CHECKED		
ENG.	MP	8/01/06
MAN.	–	–
Q.C.	–	–
APPROVED	MP	8/01/06

All technical information and the design disclosure in this drawing or in any accompanying technical data was originated by and is the property of Spectrum Microwave, Inc. All patent, proprietary, design, manufacturing, reproduction, use and sales rights in any information disclosed herein are reserved by Spectrum Microwave, Inc. No right or license to use any such information for any purpose other than as agreed to by Spectrum Microwave, Inc. is prohibited without written permission of Spectrum Microwave, Inc.

Spectrum Microwave, Inc.
COLUMBIA, MARYLAND USA

SALES DRAWING,
BPF3–0499–001LA

SIZE	CAGE CODE	DRAWING NO.	REV
C	67195	STO–5395	6

SCALE 4/1 | DO NOT SCALE PRINTS | SHEET 1 OF 1

STO–5395

F–0010, REV A, 11/4/99