# Current Transformers

## Model 186 Current Transformer

**File # E91015**

- ***Optimal for remote sensing of AC current signals***
- ***Converts AC current signal to 0-10 ACV signal***
- ***For use with rectifier type analog panel meters or digital indicators***
- ***Perfect for low current measurement where a donut current transformer would not sense a signal***

## Ordering Information

| Range | VA | Cat. Number |
|---|---|---|
| 0-100mA | 0.50 | 01295 |
| 0-500mA | 0.53 | 01304 |
| 0-5Amp | 0.40 | 01312 |
| 0-10Amp | 1.45 | 01314 |
| 0-15Amp | 1.05 | 01315 |
| 0-20Amp | 1.04 | 01316 |
| 0-25Amp | 1.50 | 01317 |
| 0-30Amp | 1.10 | 01318 |
| 0-40Amp | 1.09 | 01319 |
| 0-50Amp | 1.90 | 01321 |

## Dimensions

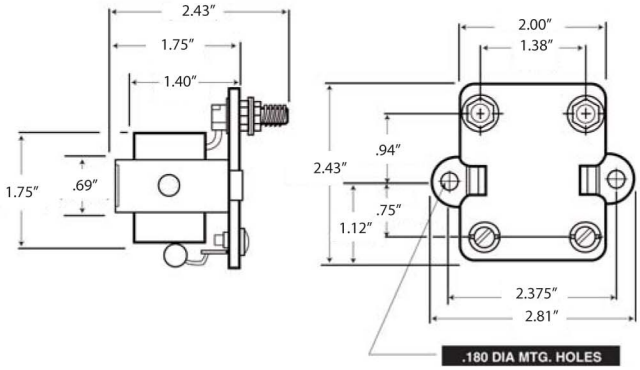


## Current Transformers with Terminals

- ***Reduces high AC current signal to 5 amp AC signal***
- ***Use with analog and 5 amp AC digital indicators***

**File # E93779**

## Specifications

| | |
|---|---|
| **Accuracy** | ±2.0% (100 Amp)<br>±1.0% (100-1000 Amp) |
| **Frequency** | 50-400 Hz |
| **Insulation Class** | 0.6kV BIL<br>10kV full wave |
| **Weight** | 1.0lb (453.59g) |

## Dimensions

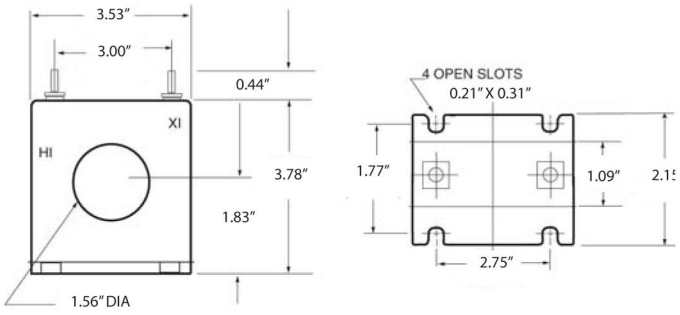


## Ordering Information

| Range | Burden VA@60Hz | Catalog Number |
|---|---|---|
| 100:5 | 2.0 | 37020 |
| 150:5 | 5.0 | 37021 |
| 200:5 | 5.0 | 37022 |
| 300:5 | 12.5 | 37023 |
| 500:5 | 20.0 | 37024 |
| 1000:5 | 25.0 | 37025 |