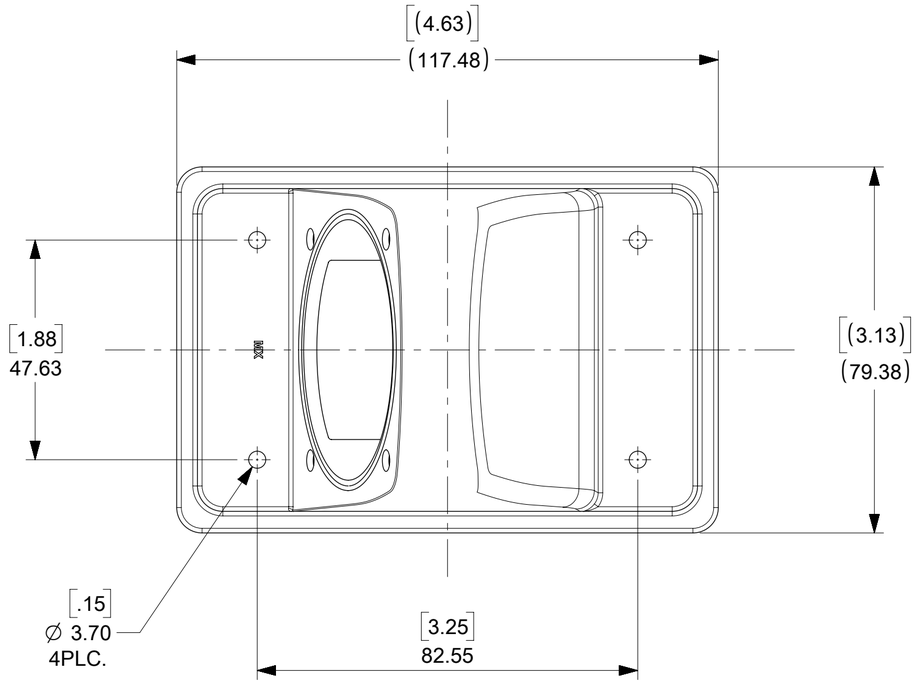


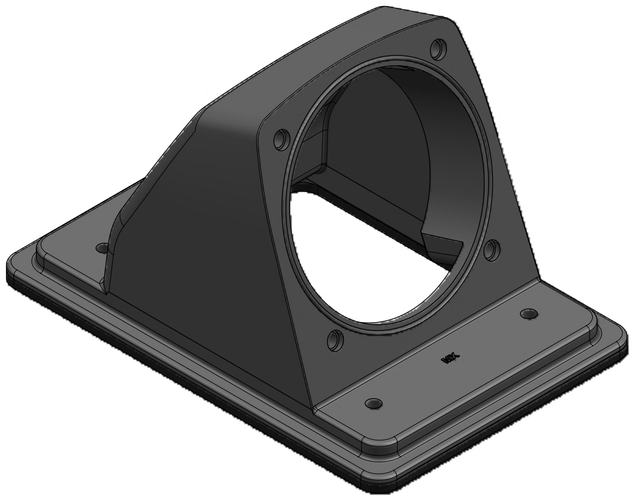

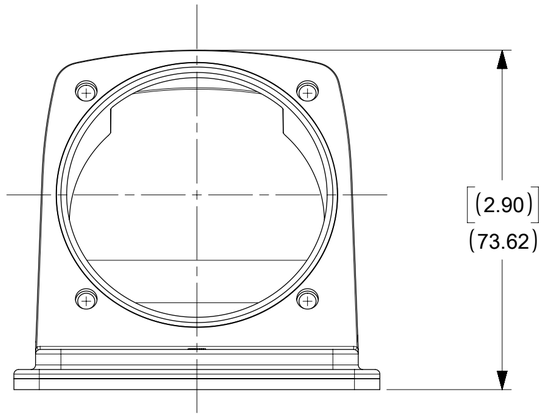


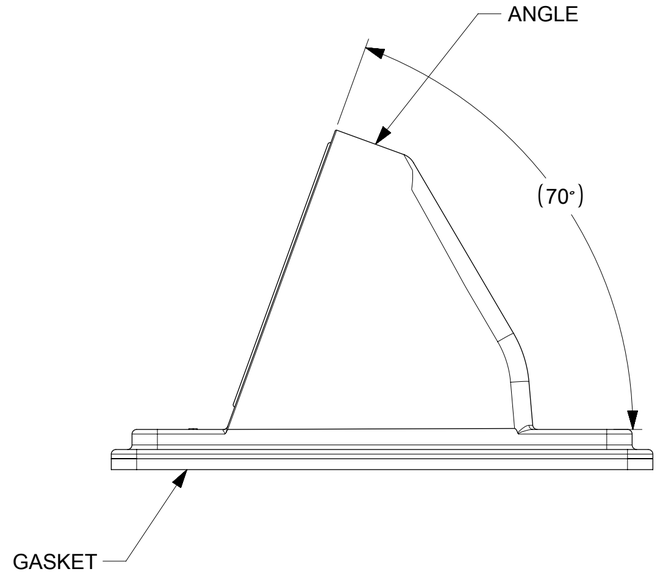


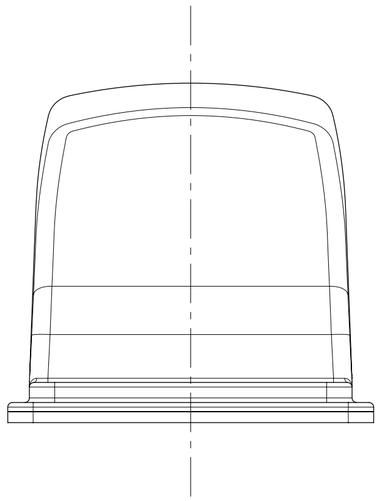

NOTES:

1. MATERIAL:
   ANGLE - GREY PBT
   GASKET - BLACK EPDM
   SELF TAPPING SCREWS (TO ASSEMBLE DEVICE, NOT SHOWN) - STAINLESS STEEL
   FS/FD BOX MOUNTING SCREWS - STAINLESS STEEL WITH EPDM
   O-RING (NOT SHOWN)

2. OPERATING TEMPERATURE RANGE -40°C (-40°F) TO 60°C (140°F)

3. THIS DRAWING REPLACES SD-112219-602

| QUALITY SYMBOLS | |
|---|---|
| EA | = 0 |
| EC | = 0 |
| ED | = 0 |
| ▼ | = 0 |
| C | = 0 |
| ☒ | = 0 |
| ■ | = 0 |
| V | = 0 |

THIS DRAWING CONTAINS INFORMATION THAT IS PROPRIETARY TO MOLEX ELECTRONIC TECHNOLOGIES, LLC AND SHOULD NOT BE USED WITHOUT WRITTEN PERMISSION

REDRAWN IN NX
EC NO: 176476 2018/05/09
DRWN: VBASUTHKARP 2018/05/10
CHK'D: BRUPERT 2018/05/10
APPR: BRUPERT
REV B1

GENERAL TOLERANCES (UNLESS SPECIFIED)

| | MM | INCH |
|---|---|---|
| 4 PLACES | ± | ± |
| 3 PLACES | ± | ± .005 |
| 2 PLACES | ± 0.13 | ± .010 |
| 1 PLACES | ± 0.25 | ± .020 |
| 0 PLACES | ± | ± |

ANGULAR TOL ± 0.5°

DRAFT WHERE APPLICABLE MUST REMAIN WITHIN DIMENSIONS

DIMENSION UNITS: MM[INCH]
SCALE: 1:1
DRWN BY: KJ DATE: 5/8/2017
CHK'D BY: BR DATE: 5/8/2017
APPR BY: JM DATE: 5/8/2017
DRAWING SIZE: C
THIRD ANGLE PROJECTION

molex®

ArcArrest™
30A 70° ANGLE

PRODUCT CUSTOMER DRAWING

| SERIES | MATERIAL NUMBER | CUSTOMER |
|---|---|---|
| 112219 | 1122196002 | GENERAL MARKET |

| DOCUMENT NUMBER | DOC TYPE | DOC PART | SHEET NUMBER |
|---|---|---|---|
| 1122196002 | PSD | 000 | 1 OF 1 |

| RELEASE STATUS | P1 | RELEASE DATE | 2018/05/10 16:43:24 |
|---|---|---|---|

FORMAT: Eng-tega-master-tb-prod-C
REVISION: C
DATE: 2017/02/06