THIS DRAWING IS UNPUBLISHED. RELEASED FOR PUBLICATION 2008
© COPYRIGHT 2008 BY - ALL RIGHTS RESERVED.

REVISIONS

P	LTR	DESCRIPTION	DATE	DWN	APVD
	BA1	ECR-17-011125	01AUG2017	RK	TN

FOR FURTHER INFORMATION SEE DATA SHEET FOR
SERIES TYPE SBC(SQUARE CERAMIC), HIGH POWER RESISTORS

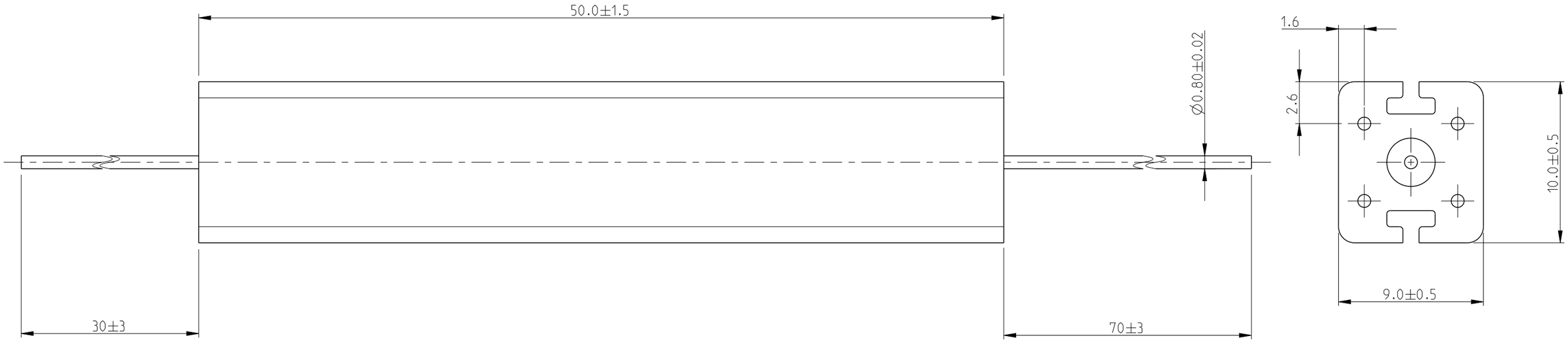

RoHS Compliant

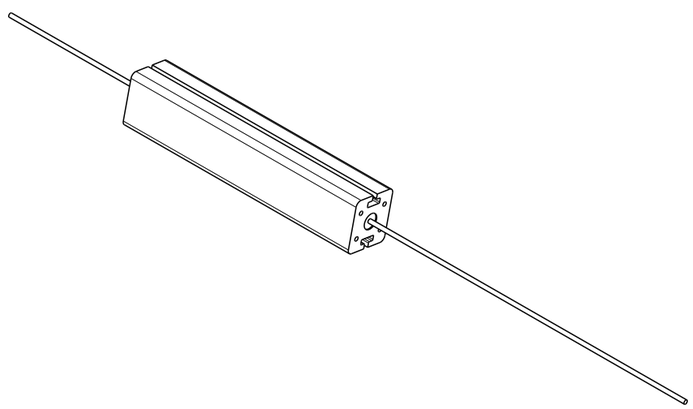

THIS DRAWING IS A CONTROLLED DOCUMENT.

DIMENSIONS: mm

TOLERANCES UNLESS OTHERWISE SPECIFIED:

0 PLC	±0.2
1 PLC	±0.1
2 PLC	±-
3 PLC	±-
4 PLC	±-
ANGLES	±5°

MATERIAL: - / -

FINISH: - / -

DWN PARUSURAM.T 28JULY2010
CHK STEPHEN.P 28JULY2010
APVD STEPHEN.P 28JULY2010
PRODUCT SPEC -
APPLICATION SPEC -
WEIGHT 10g

TE Connectivity

NAME
HIGH POWER RESISTOR TYPE
SBC (SQUARE CERAMIC) SERIES SBCHE11

SIZE	CAGE CODE	DRAWING NO	RESTRICTED TO
A3	00779	C-1623728	-

CUSTOMER DRAWING | SCALE 4:1 | SHEET 1 OF 1 | REV BA1

1470-19 (3/13)