380-115
EMI/RFI Non-Environmental Backshell
with Strain Relief
Type B - Rotatable Coupling - Low Profile

CONNECTOR DESIGNATORS
MIL-DTL-38999 Series I, II (F)
MIL-DTL-38999 Series III and IV (H)

A-F-H-L-S
ROTATABLE COUPLING

TYPE B INDIVIDUAL AND/OR OVERALL SHIELD TERMINATION

Product Series	Connector Designator	Angle and Profile	Basic Number	Finish	Shell Size	Dash No.	Strain Relief Style	Length: S Only
380	F	A	115	NF	15	08	M	6

Angle and Profile: *A - 90° B - 45° H - 45° J - 90° S - Straight*

Strain Relief Style: *(H, A, M, D)*

Length: S Only: *(1/2 inch increments e.g. 6 = 3 inches)*

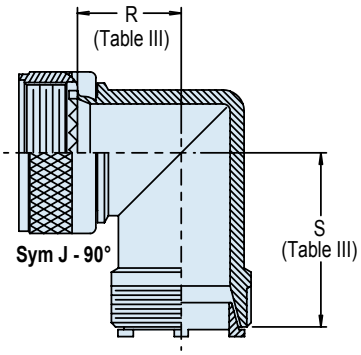

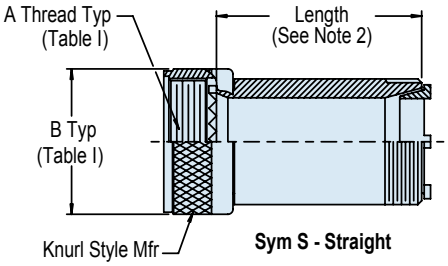

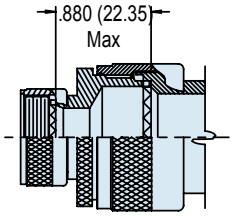

Style II
45° & 90°
(See Note 3)

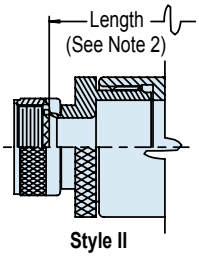

Style II
Straight
(See Note 3)

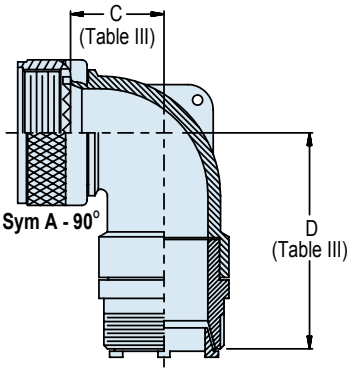

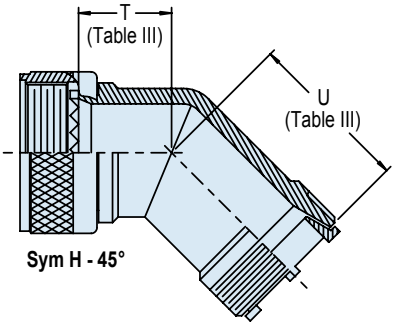

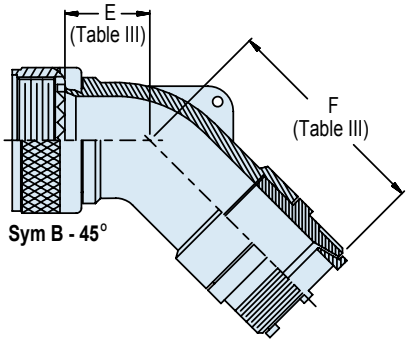

STYLE H
Heavy Duty
(Table VI)

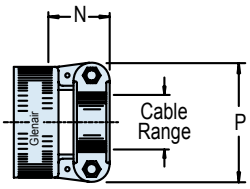

STYLE A
Medium Duty
(Table V)

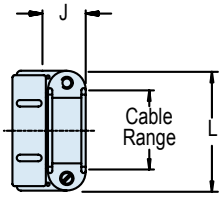

STYLE M
Medium Duty
(Table V)

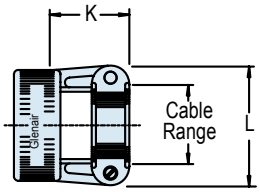

STYLE D
Medium Duty
(Table V)

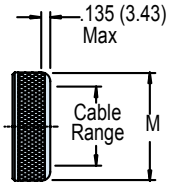

© 2005 Glenair, Inc. CAGE Code 06324 Printed in U.S.A.

380-115
EMI/RFI Non-Environmental Backshell
with Strain Relief
Type B - Rotatable Coupling - Low Profile

Glenair®

TABLE III: ELBOW DIMENSIONS

Shell Size A	Shell Size F,L,S	Shell Size H	C Max	D Max	E Max	F Max	R Max	S Max	T Max	U Max
08	08	09	.500 (12.7)	1.684 (42.8)	457 (11.6)	1.674 (42.5)	.910 (23.11)	1.910 (48.77)	.780 (19.81)	1.780 (45.21)
10	10	11	.595 (15.1)	1.804 (45.8)	.520 (13.2)	1.734 (44.0)	.970 (24.64)	1.970 (50.04)	.810 (20.57)	1.810 (45.97)
12	12	13	.610 (15.5)	1.824 (46.3)	.582 (14.8)	1.794 (45.6)	1.030 (26.16)	2.030 (50.56)	.830 (21.08)	1.830 (46.48)
14	14	15	.700 (17.8)	1.894 (48.1)	.645 (16.4)	1.884 (47.9)	1.090 (27.68)	2.090 (53.09)	.850 (21.59)	1.850 (46.99)
16	16	17	.885 (22.5)	1.984 (50.4)	.738 (18.7)	1.994 (50.6)	1.150 (29.21	2.150 (54.61)	.880 (22.35)	1.880 (47.75)
18	18	19	.975 (24.8)	2.154 (54.7)	.926 (23.5)	2.184 (55.5)	1.200 (30.48)	2.200 (55.88)	.900 (22.86)	1.900 (48.26)
20	20	21	.975 (24.8)	2.154 (54.7)	.926 (23.5)	2.184 (55.5)	1.270 (32.26)	2.270 (57.66)	.930 (23.62)	1.930 (49.02)
22	22	23	1.125 (28.6)	2.264 (57.5)	1.020 (25.9)	2.334 (59.3)	1.330 (33.78)	2.330 (59.18)	.950 (24.13)	1.950 (49.53)
24	24	25	1.125 (28.6)	2.264 (57.5)	1.020 (25.9)	2.334 (59.3)	1.390 (35.31)	2.390 (60.71)	.980 (24.13)	1.980 (50.29)
28			1.225 (31.1)	2.434 (61.8)	1.145 (29.1)	2.384 (60.6)	1.460 (37.08)	2.460 (62.48)	1.150 (29.21)	2.150 (54.61)
32			1.575 (40.0)	2.684 (68.2)	1.207 (30.7)	2.484 (63.1)	1.590 (40.38)	2.590 (65.79)	1.210 (30.73)	2.210 (56.13)
36			1.775 (45.1)	2.684 (68.2)	1.238 (31.4)	2.574 (65.4)	1.690 (42.93)	2.690 (68.33)	1.240 (31.50)	2.240 (56.90)
40			N/A	N/A	N/A	N/A	1.900 (48.26)	2.200 (55.88)	1.250 (31.75)	1.590 (40.38)
44			N/A	N/A	N/A	N/A	2.030 (51.56)	2.360 (59.94)	1.300 (33.02)	1.640 (41.65)
48			N/A	N/A	N/A	N/A	2.180 (53.37)	2.530 (64.26)	1.370 (34.79)	1.720 (43.68)
61			N/A	N/A	N/A	N/A	1.290 (32.76)	1.490 (37.85)	.880 (22.35)	1.100 (27.94)

TABLE II: FINISHES

Sym	Finish
B	Cadmium Plate, Olive Drab
C*	Anodize, Black
G*	Hard Coat, Anodic
J	Gold Iridite over Cadmium Plate over Nickel
LF	Cadmium Plate, Bright over Electroless Nickel
M	Electroless Nickel
N	Cadmium Plate, Olive Drab over Nickel
NC	Zinc Cobalt, Dark Olive Drab
NF	Cad/O.D. over Electroless Nickel (1000 Hr. Salt Spray)
T	Cadmium Plate, Bright Dip over Nickel
U**	Cadmium Plate, Black
UC	Zinc Cobalt, Black
Z1**	Passivate
ZN	Zinc Nickel, Olive Drab

TABLE IV: CABLE CLAMP CABLE RANGE

Dash No.	N Max	P Max	Cable Range Min	Cable Range Max
04	.780 (19.8)	.957 (24.3)	.125 (3.2)	.312 (7.9)
06	.780 (19.8)	1.145 (29.1)	.250 (6.4)	.437 (11.1)
08	.780 (19.8)	1.332 (33.8)	.312 (7.9)	.562 (14.3)
10	.780 (19.8)	1.332 (33.8)	.350 (8.9)	.625 (15.9)
12	.811 (20.6)	1.551 (39.4)	.500 (12.7)	.750 (19.1)
16	.905 (23.0)	1.770 (45.0)	.625 (15.9)	.937 (23.8)
20	1.092 (27.7)	2.113 (53.7)	.875 (22.2)	1.250 (31.8)
24	1.124 (28.5)	2.363 (60.0)	1.000 (25.4)	1.375 (34.9)
28	1.399 (35.5)	2.770 (70.4)	1.250 (31.8)	1.625 (41.3)
32	1.399 (35.5)	3.020 (76.7)	1.437 (36.5)	1.875 (47.6)

TABLE V: CABLE CLAMP CABLE RANGE

Dash No.	J Max	K Max	L Max	M Max	Cable Range Min**	Cable Range Max
03*	.437 (11.1)	.760 (19.3)	.843 (21.4)	.630 (16.0)	.156 (4.0)	.250 (6.4)
04*	.437 (11.1)	.760 (19.3)	.906 (23.0)	.755 (19.2)	.188 (4.8)	.312 (7.9)
06*	.500 (12.7)	.760 (19.3)	1.093 (27.8)	.942 (23.9)	.281 (7.1)	.438 (11.1)
08	.563 (14.3)	.760 (19.3)	1.187 (30.1)	1.067 (27.1)	.344 (8.7)	.562 (14.3)
10	.563 (14.3)	.760 (19.3)	1.281 (32.5)	1.192 (30.3)	.375 (9.5)	.625 (15.9)
12	.563 (14.3)	.760 (19.3)	1.500 (38.1)	1.380 (35.1)	.438 (11.1)	.750 (19.1)
16	.656 (16.7)	1.073 (27.3)	1.719 (43.7)	1.535 (39.0)	.562 (14.3)	.938 (23.8)
20	.656 (16.7)	1.323 (33.6)	2.062 (52.4)	1.848 (46.9)	.750 (19.1)	1.250 (31.8)
24	.656 (16.7)	1.323 (33.6)	2.312 (58.7)	2.255 (57.3)	.781 (19.8)	1.375 (34.9)
28	1.188 (30.2)	1.572 (39.9)	2.719 (69.1)	2.505 (63.6)	.969 (24.6)	1.625 (41.3)
32*	1.187 (30.1)	1.572 (39.9)	2.969 (75.4)	2.755 (70.0)	1.125 (28.6)	1.875 (47.6)
40*	1.125 (28.6)	1.572 (39.9)	3.531 (89.7)	3.255 (82.7)	1.469 (37.3)	2.375 (60.3)

* Not available in Style M clamp.

** Not Applicable Style D

APPLICATION NOTES

1. Assembly identified with manufacturer's name and part number, space permitting.
2. Standard minimum length for Style I is 1.500 inches, Style II standard length is 2.000 inches.For shorter lengths consult factory. Appklies to Symbol S only.
3. When cable range exceeds Max Entry shown in Table IV, Style II will be supplied. Note: C, D, E, F, R, S, T and U dimensions do not apply to Style II.
4. Metric dimensions are in parentheses.
5. For effective grounding, connector with conductive finish should be used.
6. Glenair Series 600 Backshell Assembly Tools are recommended for assembly and installation.
7. Material/Finish:
   Elbow, adapter, coupling nut, ferrules and clamp - Aluminim alloy or SST/Table II.
   Hardware - CRES/Passivate
8. Angular functions A and B are currently not available in shell sizes 40, 44 and 61. Consult factory for suitable alternatives.

© 2005 Glenair, Inc.