THIS DRAWING IS UNPUBLISHED. RELEASED FOR PUBLICATION OCT. 2005
© COPYRIGHT 2005 BY - ALL RIGHTS RESERVED.

REVISIONS

P	LTR	DESCRIPTION	DATE	DWN	APVD
	B1	Released as per ECR-08-022292	4-Sep-08	SP	JC
	T	ECR-16-003733	12MAR2016	KR	TR

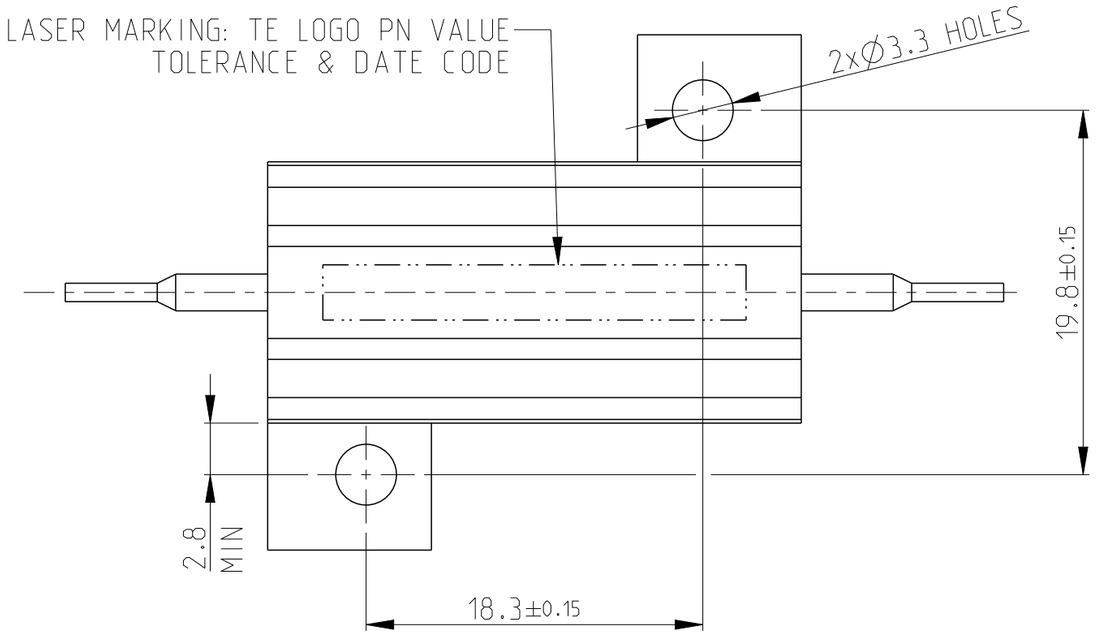

1 FOR FURTHER INFORMATION SEE DATA SHEET FOR HS SERIES-ALUMINIUM HOUSED RESISTORS

2 FOR A SPECIFIC PN FOR A RESISTANCE VALUE AND TOLERANCE, PLEASE REFER TO DMF

3 TECHNICAL SPECIFICATION

DISSIPATION AT 25°C :	25 WATTS MOUNTED ON STANDARD HEATSINK
BS OHMIC RANGE :	R051 TO 27K
STABILITY :	ΔR < =1% PER 1000Hrs
ISOLATION VOLTAGE :	2500V DC/AC pk
MAX WORKING VOLTAGE :	500V DC/AC rms
TEMP COEFFICIENT :	> 1R0 50ppm
	> 100R 25ppm
CLIMATIC CATEGORY :	55/200/56

RoHS Compliant

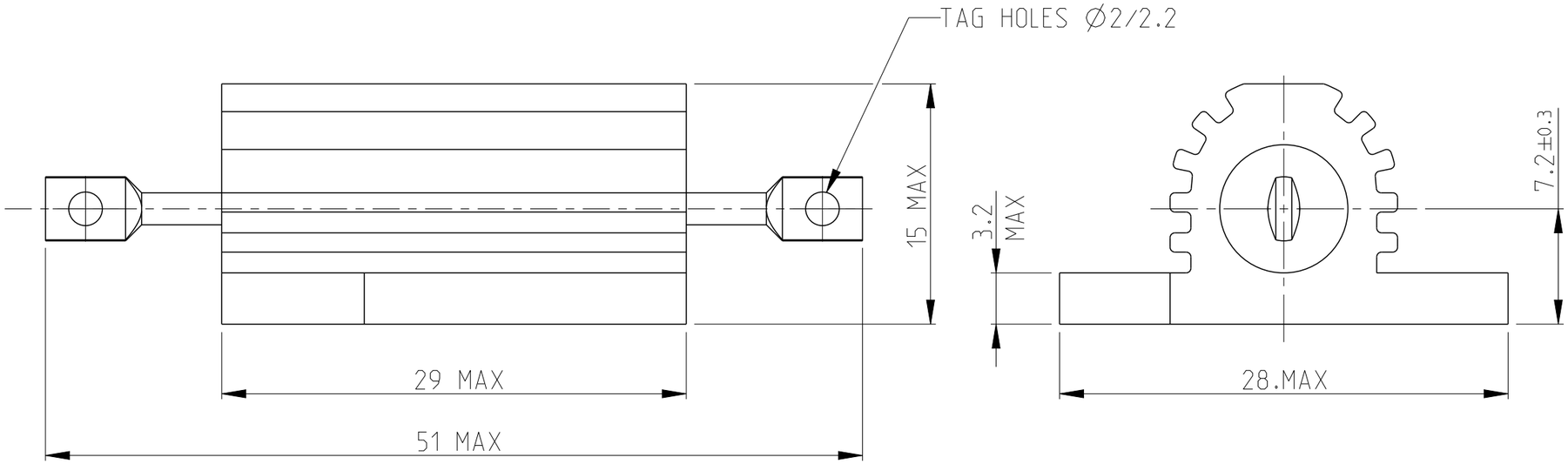

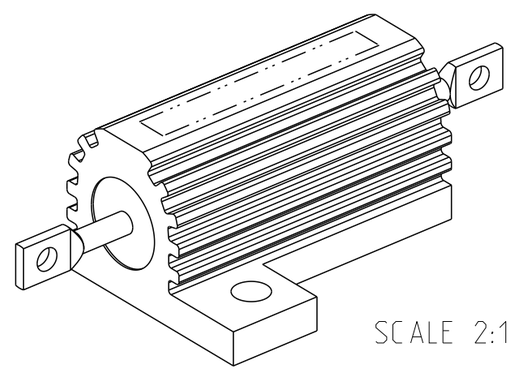

THIS DRAWING IS A CONTROLLED DOCUMENT.

DIMENSIONS: mm

TOLERANCES UNLESS OTHERWISE SPECIFIED:

0 PLC	±0.5
1 PLC	±0.2
2 PLC	±0.1
3 PLC	±-
4 PLC	±-
ANGLES	±5°

MATERIAL: - material_2

FINISH: - finish_spec_2

DWN DAVE KENNEDY 30.SEP.05
CHK J CATCHPOLE 03.OCT.05
APVD J CATCHPOLE 03.OCT.05
PRODUCT SPEC -
APPLICATION SPEC -
WEIGHT -

CUSTOMER DRAWING

TE Connectivity

NAME HSA25 METAL CLAD RESISTOR

SIZE	CAGE CODE	DRAWING NO	RESTRICTED TO
A3	00779	C-1676625	-

SCALE 3:1 SHEET 1 OF 1 REV T

1470-19 (3/13)