# 390-006
## Submersible EMI/RFI Cable Sealing Backshell
### with Strain Relief
### Type B - Direct Coupling - Low Profile

**CONNECTOR DESIGNATORS**

**A-B*-C-D-E-F**
**G-H-J-K-L-S**

*** Conn. Desig. B See Note 5**

**DIRECT COUPLING**

**TYPE B INDIVIDUAL AND/OR OVERALL SHIELD TERMINATION**

**390 F S 006 M 16 10 A 6**

- Product Series
- Connector Designator
- Angle and Profile
  - A = 90°
  - B = 45°
  - S = Straight
- Basic Part No.
- Finish (Table II)
- Shell Size (Table I)
- Cable Entry (Tables X, XI)
- Strain Relief Style (H, A, M, D, AR)
- Length: S only (1/2 inch increments: e.g. 6 = 3 inches)

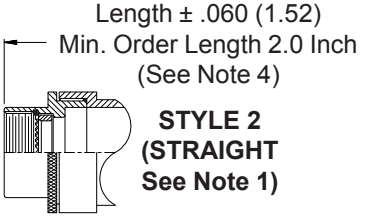


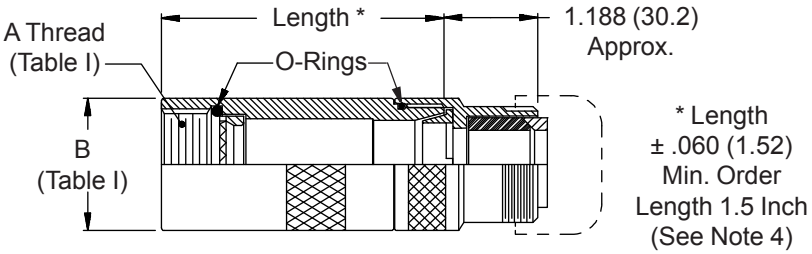


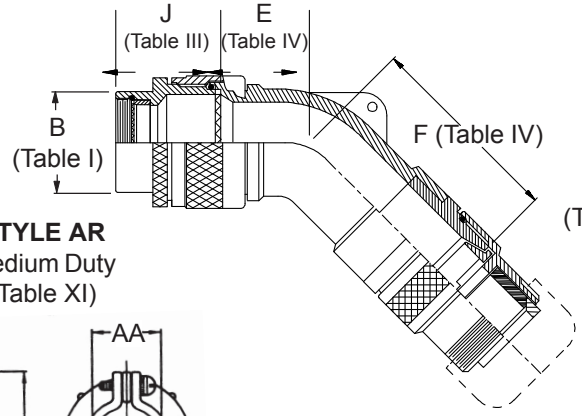


**STYLE AR**
Medium Duty
(Table XI)

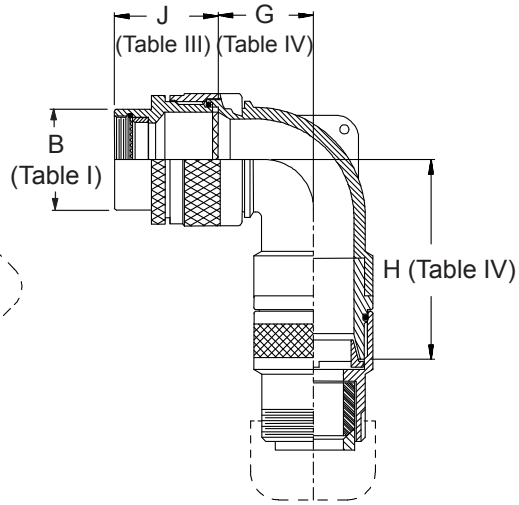


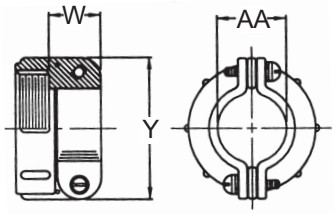


**STYLE H**
Heavy Duty
(Table X)

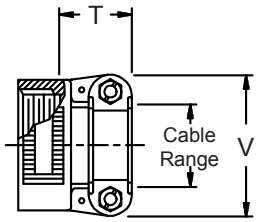


**STYLE A**
Medium Duty
(Table XI)

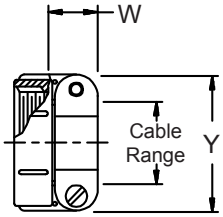


**STYLE M**
Medium Duty
(Table XI)

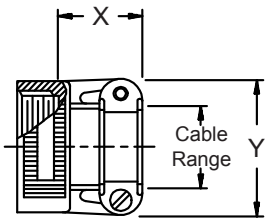


**STYLE D**
Medium Duty
(Table XI)

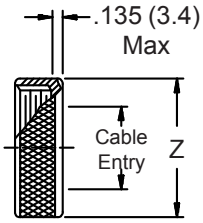


© 2005 Glenair, Inc. CAGE Code 06324 Printed in U.S.A.

# 390-006
## Submersible EMI/RFI Cable Sealing Backshell
### with Strain Relief
### Type B - Direct Coupling - Low Profile

See inside back cover fold-out or pages 13 and 14 for Tables I and II.

**TABLE III: FRONT ADAPTER**

| Shell Size | J Max - Conn. Designator A-E-F J-H-L-S | D-B-G-K | C |
|---|---|---|---|
| 08/09 | 1.180 (30.0) | 1.440 (36.6) | |
| 10/11 | 1.180 (30.0) | 1.440 (36.6) | |
| 12/13 | 1.180 (30.0) | 1.440 (36.6) | 1.735 (44.1) |
| 14/15 | 1.180 (30.0) | 1.440 (36.6) | 1.915 (48.6) |
| 16/17 | 1.380 (35.0) | 1.560 (39.6) | 1.915 (48.6) |
| 18/19 | 1.380 (35.0) | 1.560 (39.6) | 1.915 (48.6) |
| 20/21 | 1.380 (35.0) | 1.560 (39.6) | 1.915 (48.6) |
| 22/23 | 1.380 (35.0) | 1.560 (39.6) | 1.915 (48.6) |
| 24/25 | 1.380 (35.0) | 1.560 (39.6) | 1.915 (48.6) |
| 28/29 | 1.610 (40.9) | 1.560 (39.6) | 1.915 (48.6) |
| 32/33 | 1.610 (40.9) | 1.750 (44.5) | 1.915 (48.6) |
| 36 | 1.610 (40.9) | 1.750 (44.5) | 1.915 (48.6) |
| 40 | 1.610 (40.9) | 2.190 (55.6) | 1.915 (48.6) |

**TABLE IV: ELBOW DIMENSIONS**

| Dash No. | E Max | F Max | G Max | H Max |
|---|---|---|---|---|
| 04 | .630 (16.0) | 2.601 (66.1) | .636 (16.2) | 2.551 (64.8) |
| 06 | .630 (16.0) | 2.601 (66.1) | .710 (18.0) | 2.671 (67.8) |
| 08 | .692 (17.6) | 2.661 (67.6) | .731 (18.6) | 2.691 (68.4) |
| 10 | .755 (19.2) | 3.091 (78.5) | .825 (21.0) | 3.101 (78.8) |
| 12 | .848 (21.5) | 3.201 (81.3) | .988 (25.1) | 3.191 (81.1) |
| 16 | 1.036 (26.3) | 3.391 (86.1) | 1.087 (27.6) | 3.361 (85.4) |
| 20 | 1.130 (28.7) | 3.604 (91.5) | 1.325 (33.7) | 3.534 (89.8) |
| 24 | 1.255 (31.9) | 3.637 (92.4) | 1.337 (34.0) | 3.687 (93.6) |
| 28 | 1.317 (33.5) | 3.737 (94.9) | 1.827 (46.4) | 3.937 (100.0) |
| 32 | 1.348 (34.2) | 3.877 (98.5) | 2.027 (51.5) | 3.987 (101.3) |

**TABLE X: CABLE ENTRY**

| Dash No. | T Max | V Max | Cable Range Min | Cable Range Max |
|---|---|---|---|---|
| 04 | .780 (19.8) | .957 (24.3) | .125 (3.2) | .312 (7.9) |
| 06 | .780 (19.8) | 1.145 (29.1) | .250 (6.4) | .437 (11.1) |
| 08 | .780 (19.8) | 1.332 (33.8) | .387 (9.8) | .562 (14.3) |
| 10 | .780 (19.8) | 1.332 (33.8) | .350 (8.9) | .625 (15.9) |
| 12 | .811 (20.6) | 1.551 (39.4) | .500 (12.7) | .750 (19.1) |
| 16 | .905 (23.0) | 1.770 (45.0) | .625 (15.9) | .937 (23.8) |
| 20 | 1.092 (27.7) | 2.113 (53.7) | .875 (22.2) | 1.250 (31.8) |
| 24 | 1.124 (28.5) | 2.363 (60.0) | 1.000 (25.4) | 1.375 (34.9) |
| 28 | 1.399 (35.5) | 2.770 (70.4) | 1.250 (31.8) | 1.625 (41.3) |
| 32 | 1.399 (35.5) | 3.020 (76.7) | 1.437 (36.5) | 1.875 (47.6) |

1. When maximum cable entry (page 22) is exceeded, Style 2 will be supplied. (Function S only).
2. Metric dimensions (mm) are indicated in parentheses.
3. Cable range is defined as the accommodations range for the wire bundle or cable. Dimensions shown are not intended for inspection criteria.
4. Consult factory for shorter lengths on straight backshells.
5. When using Connector Designator B refer to pages 18 and 19 for part number development.

**TABLE XI: CABLE ENTRY**

| Dash No. | W Max | X Max | Y Max | Z Max | AA*** Closed | Cable Range Min ** | Cable Range Max |
|---|---|---|---|---|---|---|---|
| 04* | .437 (11.1) | .760 (19.3) | .906 (23.0) | .755 (19.2) | .312 (7.9) | .188 (4.8) | .312 (7.9) |
| 06* | .500 (12.7) | .760 (19.3) | 1.093 (27.8) | .942 (23.9) | .438 (11.1) | .281 (7.1) | .438 (11.1) |
| 08 | .563 (14.3) | .760 (19.3) | 1.187 (30.1) | 1.067 (27.1) | .562 (14.3) | .387 (9.8) | .562 (14.3) |
| 10 | .563 (14.3) | .760 (19.3) | 1.281 (32.5) | 1.192 (30.3) | .625 (15.9) | .375 (9.5) | .625 (15.9) |
| 12 | .563 (14.3) | .760 (19.3) | 1.500 (38.1) | 1.380 (35.1) | .750 (19.1) | .438 (11.1) | .750 (19.1) |
| 16 | .656 (16.7) | 1.073 (27.3) | 1.719 (43.7) | 1.535 (39.0) | .938 (23.8) | .625 (15.9) | .938 (23.8) |
| 20 | .656 (16.7) | 1.323 (33.6) | 2.062 (52.4) | 1.848 (46.9) | 1.250 (31.8) | .875 (22.2) | 1.250 (31.8) |
| 24 | .656 (16.7) | 1.323 (33.6) | 2.312 (58.7) | 2.255 (57.3) | 1.375 (34.9) | 1.000 (25.4) | 1.375 (34.9) |
| 28 | 1.188 (30.2) | 1.572 (39.9) | 2.719 (69.1) | 2.505 (63.6) | 1.625 (41.3) | 1.250 (31.8) | 1.625 (41.3) |
| 32* | 1.187 (30.1) | 1.572 (39.9) | 2.969 (75.4) | 2.755 (70.0) | 1.875 (47.6) | 1.437 (36.5) | 1.875 (47.6) |

* Not available in Style M clamp. ** Not Applicable Style D ***Applicable Style AR Only.

© 2005 Glenair, Inc. CAGE Code 06324 Printed in U.S.A.