390-006
Submersible EMI/RFI Cable Sealing Backshell
with Strain Relief
Type B - Direct Coupling - Low Profile

CONNECTOR DESIGNATORS

A-B*-C-D-E-F
G-H-J-K-L-S

*** Conn. Desig. B See Note 5**

DIRECT COUPLING

TYPE B INDIVIDUAL AND/OR OVERALL SHIELD TERMINATION

390 F S 006 M 16 10 A 6

- Product Series
- Connector Designator
- Angle and Profile
  - A = 90°
  - B = 45°
  - S = Straight
- Basic Part No.
- Finish (Table II)
- Shell Size (Table I)
- Cable Entry (Tables X, XI)
- Strain Relief Style (H, A, M, D, AR)
- Length: S only (1/2 inch increments: e.g. 6 = 3 inches)

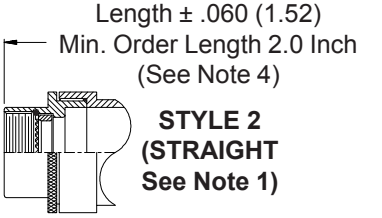

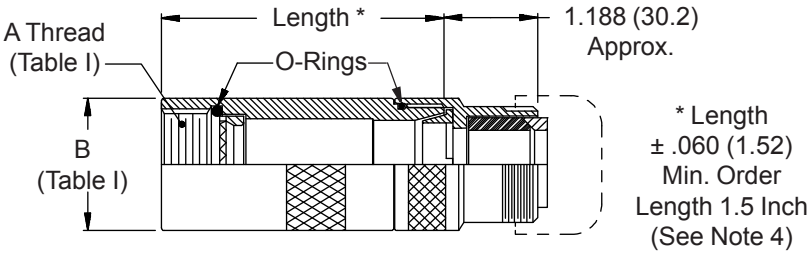

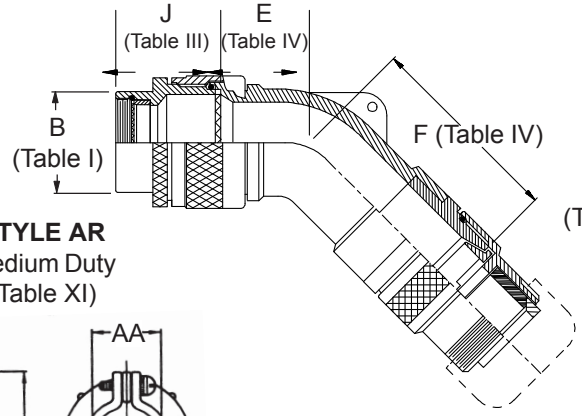

STYLE AR
Medium Duty
(Table XI)

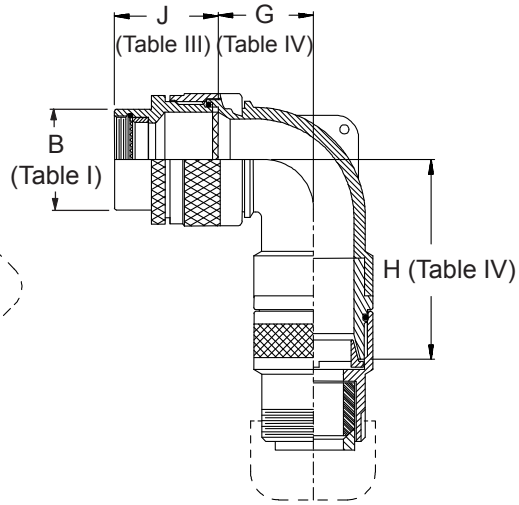

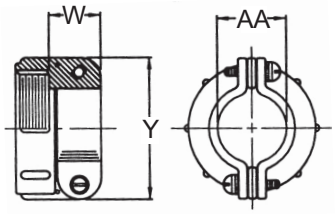

STYLE H
Heavy Duty
(Table X)

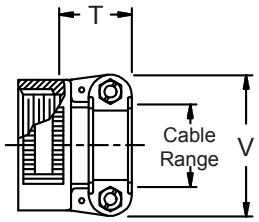

STYLE A
Medium Duty
(Table XI)

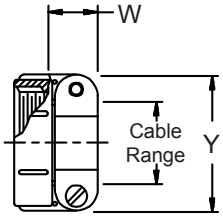

STYLE M
Medium Duty
(Table XI)

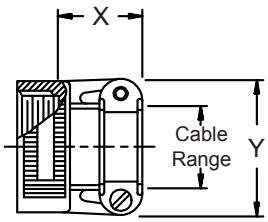

STYLE D
Medium Duty
(Table XI)

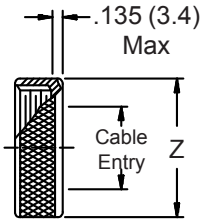

© 2005 Glenair, Inc. CAGE Code 06324 Printed in U.S.A.

390-006
Submersible EMI/RFI Cable Sealing Backshell
with Strain Relief
Type B - Direct Coupling - Low Profile

See inside back cover fold-out or pages 13 and 14 for Tables I and II.

TABLE III: FRONT ADAPTER

Shell Size	J Max - Conn. Designator A-E-F J-H-L-S	D-B-G-K	C
08/09	1.180 (30.0)	1.440 (36.6)	
10/11	1.180 (30.0)	1.440 (36.6)	
12/13	1.180 (30.0)	1.440 (36.6)	1.735 (44.1)
14/15	1.180 (30.0)	1.440 (36.6)	1.915 (48.6)
16/17	1.380 (35.0)	1.560 (39.6)	1.915 (48.6)
18/19	1.380 (35.0)	1.560 (39.6)	1.915 (48.6)
20/21	1.380 (35.0)	1.560 (39.6)	1.915 (48.6)
22/23	1.380 (35.0)	1.560 (39.6)	1.915 (48.6)
24/25	1.380 (35.0)	1.560 (39.6)	1.915 (48.6)
28/29	1.610 (40.9)	1.560 (39.6)	1.915 (48.6)
32/33	1.610 (40.9)	1.750 (44.5)	1.915 (48.6)
36	1.610 (40.9)	1.750 (44.5)	1.915 (48.6)
40	1.610 (40.9)	2.190 (55.6)	1.915 (48.6)

TABLE IV: ELBOW DIMENSIONS

Dash No.	E Max	F Max	G Max	H Max
04	.630 (16.0)	2.601 (66.1)	.636 (16.2)	2.551 (64.8)
06	.630 (16.0)	2.601 (66.1)	.710 (18.0)	2.671 (67.8)
08	.692 (17.6)	2.661 (67.6)	.731 (18.6)	2.691 (68.4)
10	.755 (19.2)	3.091 (78.5)	.825 (21.0)	3.101 (78.8)
12	.848 (21.5)	3.201 (81.3)	.988 (25.1)	3.191 (81.1)
16	1.036 (26.3)	3.391 (86.1)	1.087 (27.6)	3.361 (85.4)
20	1.130 (28.7)	3.604 (91.5)	1.325 (33.7)	3.534 (89.8)
24	1.255 (31.9)	3.637 (92.4)	1.337 (34.0)	3.687 (93.6)
28	1.317 (33.5)	3.737 (94.9)	1.827 (46.4)	3.937 (100.0)
32	1.348 (34.2)	3.877 (98.5)	2.027 (51.5)	3.987 (101.3)

TABLE X: CABLE ENTRY

Dash No.	T Max	V Max	Cable Range Min	Cable Range Max
04	.780 (19.8)	.957 (24.3)	.125 (3.2)	.312 (7.9)
06	.780 (19.8)	1.145 (29.1)	.250 (6.4)	.437 (11.1)
08	.780 (19.8)	1.332 (33.8)	.387 (9.8)	.562 (14.3)
10	.780 (19.8)	1.332 (33.8)	.350 (8.9)	.625 (15.9)
12	.811 (20.6)	1.551 (39.4)	.500 (12.7)	.750 (19.1)
16	.905 (23.0)	1.770 (45.0)	.625 (15.9)	.937 (23.8)
20	1.092 (27.7)	2.113 (53.7)	.875 (22.2)	1.250 (31.8)
24	1.124 (28.5)	2.363 (60.0)	1.000 (25.4)	1.375 (34.9)
28	1.399 (35.5)	2.770 (70.4)	1.250 (31.8)	1.625 (41.3)
32	1.399 (35.5)	3.020 (76.7)	1.437 (36.5)	1.875 (47.6)

1. When maximum cable entry (page 22) is exceeded, Style 2 will be supplied. (Function S only).
2. Metric dimensions (mm) are indicated in parentheses.
3. Cable range is defined as the accommodations range for the wire bundle or cable. Dimensions shown are not intended for inspection criteria.
4. Consult factory for shorter lengths on straight backshells.
5. When using Connector Designator B refer to pages 18 and 19 for part number development.

TABLE XI: CABLE ENTRY

Dash No.	W Max	X Max	Y Max	Z Max	AA*** Closed	Cable Range Min **	Cable Range Max
04*	.437 (11.1)	.760 (19.3)	.906 (23.0)	.755 (19.2)	.312 (7.9)	.188 (4.8)	.312 (7.9)
06*	.500 (12.7)	.760 (19.3)	1.093 (27.8)	.942 (23.9)	.438 (11.1)	.281 (7.1)	.438 (11.1)
08	.563 (14.3)	.760 (19.3)	1.187 (30.1)	1.067 (27.1)	.562 (14.3)	.387 (9.8)	.562 (14.3)
10	.563 (14.3)	.760 (19.3)	1.281 (32.5)	1.192 (30.3)	.625 (15.9)	.375 (9.5)	.625 (15.9)
12	.563 (14.3)	.760 (19.3)	1.500 (38.1)	1.380 (35.1)	.750 (19.1)	.438 (11.1)	.750 (19.1)
16	.656 (16.7)	1.073 (27.3)	1.719 (43.7)	1.535 (39.0)	.938 (23.8)	.625 (15.9)	.938 (23.8)
20	.656 (16.7)	1.323 (33.6)	2.062 (52.4)	1.848 (46.9)	1.250 (31.8)	.875 (22.2)	1.250 (31.8)
24	.656 (16.7)	1.323 (33.6)	2.312 (58.7)	2.255 (57.3)	1.375 (34.9)	1.000 (25.4)	1.375 (34.9)
28	1.188 (30.2)	1.572 (39.9)	2.719 (69.1)	2.505 (63.6)	1.625 (41.3)	1.250 (31.8)	1.625 (41.3)
32*	1.187 (30.1)	1.572 (39.9)	2.969 (75.4)	2.755 (70.0)	1.875 (47.6)	1.437 (36.5)	1.875 (47.6)

* Not available in Style M clamp. ** Not Applicable Style D ***Applicable Style AR Only.

© 2005 Glenair, Inc. CAGE Code 06324 Printed in U.S.A.