Model 358P/L

Advanced PLL LVPECL or LVDS VCXO

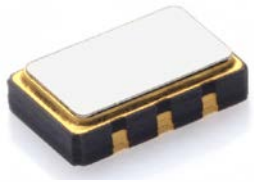

Part Dimensions:
5.0 × 3.2 × 1.3mm • 58.1mg

Features

- Ceramic Surface Mount Package
- Low Phase Jitter Performance, 500fs Typical
- Advanced PLL Design w/ Low Fundamental Crystal
- Frequency Range 10MHz – 800MHz *
- +2.5V or +3.3V Operation
- Output Enable Standard
- Tape and Reel Packaging, EIA-418

Applications

- Broadcast Video
- Storage Area Networking
- Broadband Access
- Phase-Locked Loop
- Networking Equipment
- Ethernet/GbE/SyncE
- Fiber Channel
- Test and Measurement

Standard Frequencies

- 25.00MHz	- 122.88MHz	- 200.00MHz
- 50.00MHz	- 125.00MHz	- 250.00MHz
- 74.25MHz	- 148.50MHz	- 300.00MHz
- 77.76MHz	- 155.52MHz	- 312.50MHz
- 100.00MHz	- 156.25MHz	

* See Page 11 for additional developed frequencies.
Check with factory for availability of frequencies not listed.

Description

CTS Model 358P/L is a low cost, high performance PLL voltage controlled oscillator supporting differential LVPECL or LVDS outputs. Employing the latest IC technology, M358P/L has excellent stability and low phase jitter performance.

Ordering Information

Model	Output Type	Frequency Code [MHz]	Absolute Pull Range	Frequency Stability	Temperature Range	Supply Voltage	Packaging
358	P	XXX or XXXX	B	3	I	3	T

Code	Output
P	LVPECL
L	LVDS

Code	APR
B	±50ppm

Code	Temp. Range
C	-20°C to +70°C
I	-40°C to +85°C

Code	Packing
T	1k pcs./reel

Code	Frequency
Product Frequency Code [1]	

Code	Stability
5	±25ppm [2]
4	±30ppm
3	±50ppm

Code	Voltage
2	+2.5Vdc
3	+3.3Vdc

Notes:

1] Refer to document 016-1454-0, Frequency Code Tables.
3-digits for frequencies <100MHz, 4-digits for frequencies 100MHz or greater.

2] Check factory availability when paired with "I" temperature code.

Not all performance combinations and frequencies may be available.
Contact your local CTS Representative or CTS Customer Service for availability.

This product is specified for use only in standard commercial applications. Supplier disclaims all express and implied warranties and liability in connection with any use of this product in any non-commercial applications or in any application that may expose the product to conditions that are outside of the tolerances provided in its specification.

©2017 CTS® Corporation. Information/product(s) subject to change. No warranty that product(s) will meet the stated specifications for customer specific applications or test equipment. Visit www.ctscorp.com for list of applicable patent(s), more information, or to request a quote.

Electrical Specifications

Operating Conditions

PARAMETER	SYMBOL	CONDITIONS	MIN	TYP	MAX	UNIT
Maximum Supply Voltage	V_{CC}	-	-0.5	-	4.0	V
Maximum Control Voltage	V_C	V_{CC} = +2.5V V_{CC} = +3.3V	-0.5 -0.5	- -	3.0 3.8	V
Supply Voltage	V_{CC}	±5%	2.375 3.135	2.5 3.3	2.625 3.465	V
Supply Current LVPECL LVDS	I_{CC}	Maximum Load Maximum Current Value @ +3.3V	- -	54 45	88 65	mA
Operating Temperature	T_A	-	-20 -40	+25	+70 +85	°C
Storage Temperature	T_{STG}	-	-55	-	+125	°C

Frequency Stability

PARAMETER	SYMBOL	CONDITIONS	MIN	TYP	MAX	UNIT
Frequency Range	f_O	-		10 - 800		MHz
Frequency Stability [Note 1]	$\Delta f/f_O$	-		25, 30 or 50		±ppm
Absolute Pull Range [Note 2]	APR	-	50	-	-	±ppm
Aging	$\Delta f/f_{25}$	First Year @ +25°C, nominal V_{CC}	-3	-	3	ppm

1.] Inclusive of initial tolerance at time of shipment, changes in supply voltage, load, temperature and 1st year aging.

2.] Minimum guaranteed frequency shift from f_O over variations in temperature, aging, power supply and load.

Output Parameters

PARAMETER	SYMBOL	CONDITIONS	MIN	TYP	MAX	UNIT
Output Type	-	-		LVPECL		-
Output Load	R_L	Terminated to V_{CC} - 2.0V	-	50	-	Ohms
Output Voltage Levels	V_{OH} V_{OL}	PECL Load	V_{CC} - 1.03 V_{CC} - 1.85	- -	V_{CC} - 0.60 V_{CC} - 1.60	V
Output Duty Cycle	SYM	@ V_{CC} - 1.3V	45	-	55	%
Rise and Fall Time	T_R, T_F	@ 20%/80% Levels, R_L = 50 Ohms	-	0.25	0.70	ns
Output Type	-	-		LVDS		-
Output Load	R_L	Between Outputs	-	100	-	Ohms
Output Voltage Levels	V_{OH} V_{OL}	LVDS Load	- 0.90	1.43 1.10	1.60 -	V
Output Duty Cycle	SYM	@ 1.25V	45	-	55	%
Differential Output Voltage	V_{OD}	R_L = 100 Ohms	175	330	454	mV
Offset Voltage	V_{OS}	LVDS Load	1.20	1.25	1.30	V
Rise and Fall Time	T_R, T_F	@ 20%/80% Levels, R_L = 100 Ohms	-	0.4	0.7	ns

©2017 CTS® Corporation. Information/product(s) subject to change. No warranty that product(s) will meet the stated specifications for customer specific applications or test equipment. Visit www.ctscorp.com for list of applicable patent(s), more information, or to request a quote.

Electrical Specifications

Output Parameters

PARAMETER	SYMBOL	CONDITIONS	MIN	TYP	MAX	UNIT
Start Up Time	T_S	Application of V_{CC}	-	3	5	ms
Enable Function [Tri-State]						
Enable Input Voltage	V_{IH}	Pin 1 Logic '1', Output Enabled	$0.7V_{CC}$	-	-	V
Disable Input Voltage	V_{IL}	Pin 1 Logic '0', Output Disabled	-	-	$0.3V_{CC}$	V
Disable Current	I_{IL}	Pin 1 Logic '0', Output Disabled	-	16	22	mA
Enable Time	T_{PLZ}	Pin 1 Logic '1', Output Enabled	-	-	200	ns
Phase Jitter, RMS	tjrms	Bandwidth 12 kHz - 20 MHz	-	500	<1000	fs
Period Jitter, RMS	pjrms	-	-	2.5	-	ps
Period Jitter, pk-pk	pjpk-pk	-	-	25	-	ps

Control Voltage

PARAMETER	SYMBOL	CONDITIONS	MIN	TYP	MAX	UNIT
Control Voltage	V_C	V_{CC} = 2.5V V_{CC} = 3.3V	0.2 0.3	1.25 1.65	2.3 3.0	V
Frequency Deviation	$\Delta f/f_O$	V_C = 0.2V V_C = 2.3V		-60 to -180 60 to 180		ppm
		V_C = 0.3V V_C = 3.0V		-60 to -180 60 to 180		ppm
Linearity	L	Best Straight Line Fit	-	-	±15	%
Gain Transfer	K_V	Pull Sensitivity; @ +1.25V, +25°C Pull Sensitivity; @ +1.65V, +25°C	-	80	260	ppm/V
Input Impedance	Z_{Vc}	-	1	-	-	MOhms
Modulation Roll-off	-	@ -3dB	10	-	-	kHz
Transfer Function	-	-		Positive		-

Enable Truth Table

Pin 2	Pin 4 & Pin 5
Logic '1'	Output
Open	Output
Logic '0'	High Imp.

©2017 CTS® Corporation. Information/product(s) subject to change. No warranty that product(s) will meet the stated specifications for customer specific applications or test equipment. Visit www.ctscorp.com for list of applicable patent(s), more information, or to request a quote.

Electrical Specifications

Test Circuit

LVPECL

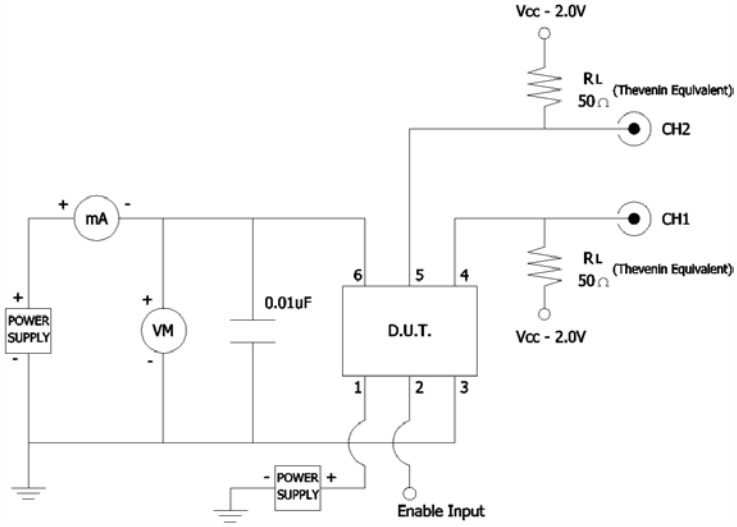

LVDS

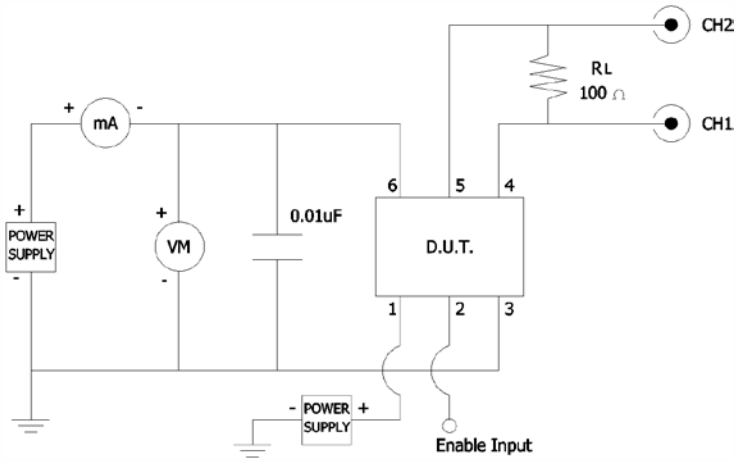

Output Waveform

LVPECL or LVDS

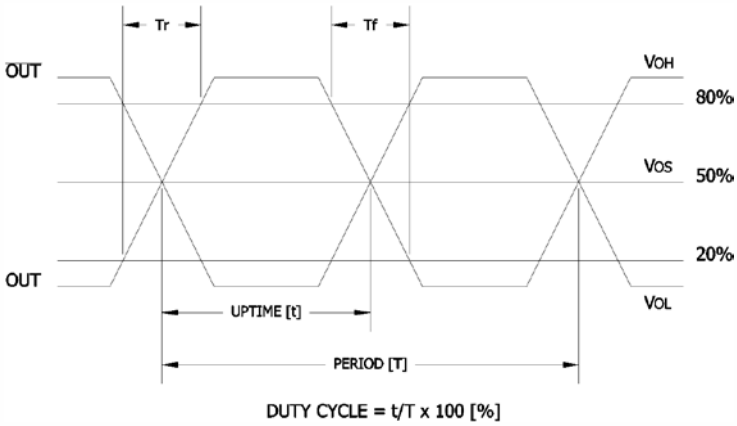

©2017 CTS® Corporation. Information/product(s) subject to change. No warranty that product(s) will meet the stated specifications for customer specific applications or test equipment. Visit www.ctscorp.com for list of applicable patent(s), more information, or to request a quote.

Electrical Specifications

Performance Data

Phase Noise [typical]

19.44MHz, LVDS, V_{CC} = +3.3V, V_C = +1.65V, T_A = +25°C

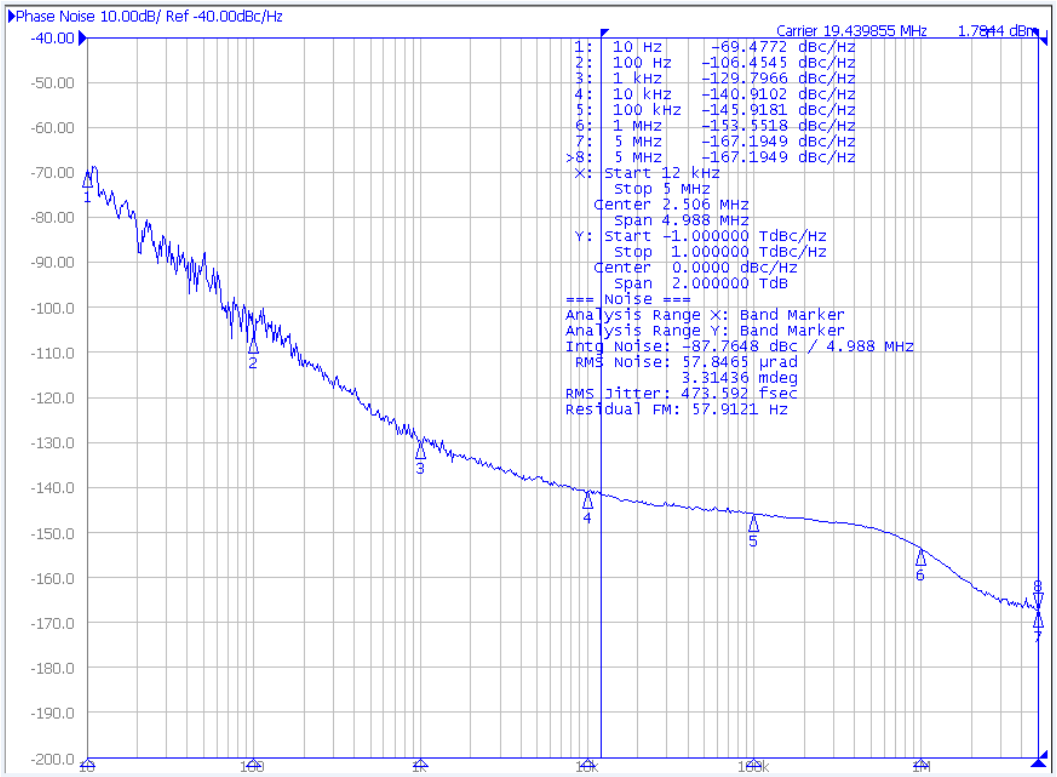

Phase Noise Tabulated

19.44MHz, LVDS, V_{CC} = +3.3V, V_C = +1.65V, T_A = +25°C

PARAMETER	SYMBOL	CONDITIONS	TYP	UNIT
LVDS @ 19.44MHz				
Phase Noise		Single Side Band		
		@ 10Hz	-69.4772	
		@ 100Hz	-106.4545	
		@ 1kHz	-129.7966	
	-	@ 10kHz	-140.9102	dBc/Hz
		@ 100kHz	-145.9181	
		@ 1MHz	-153.5518	
		@ 5MHz	-167.1949	
		@ 5MHz	-167.1949	
Phase Jitter, RMS	tjrms	Integration Bandwidth 12kHz - 5MHz	473.5920	fs

©2017 CTS® Corporation. Information/product(s) subject to change. No warranty that product(s) will meet the stated specifications for customer specific applications or test equipment. Visit www.ctscorp.com for list of applicable patent(s), more information, or to request a quote.

Electrical Specifications

Performance Data

Phase Noise [typical]

100MHz, LVPECL, V_{CC} = +3.3V, V_C = +1.65V, T_A = +25°C

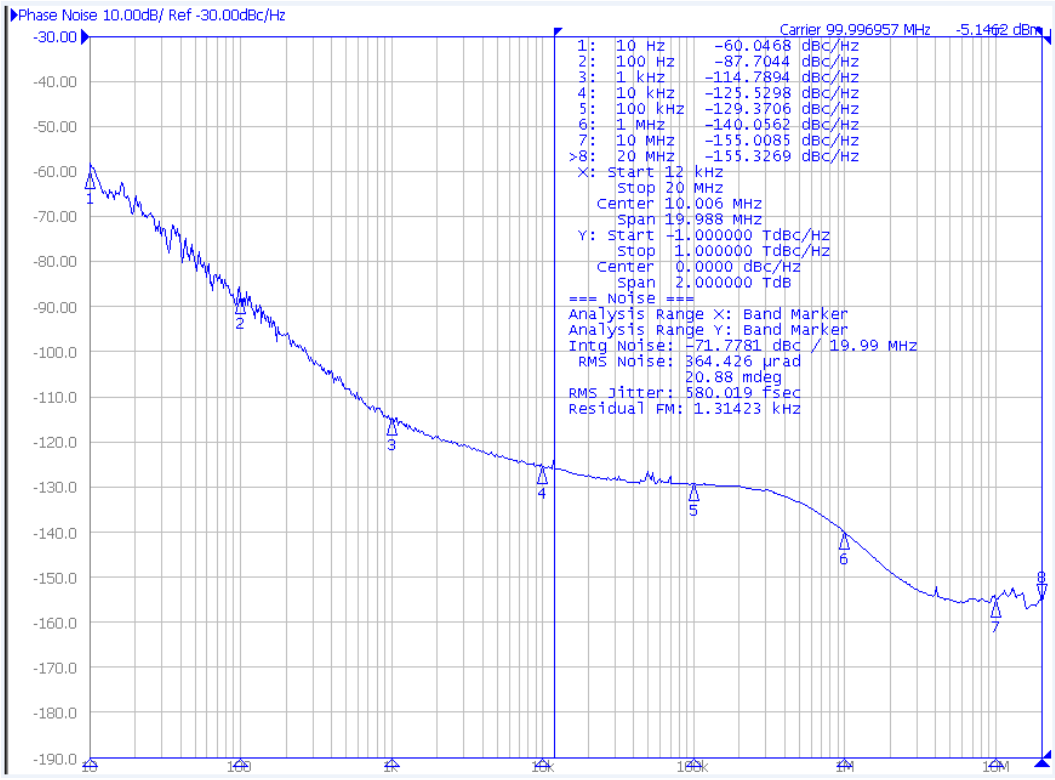

Phase Noise Tabulated

100MHz, LVPECL, V_{CC} = +3.3V, V_C = +1.65V, T_A = +25°C

PARAMETER	SYMBOL	CONDITIONS	TYP	UNIT
LVPECL @ 100MHz				
Phase Noise		Single Side Band		
		@ 10Hz	-60.0468	
		@ 100Hz	-87.7044	
		@ 1kHz	-114.7894	
	-	@ 10kHz	-125.5298	dBc/Hz
		@ 100kHz	-129.3706	
		@ 1MHz	-140.0562	
		@ 10MHz	-155.0085	
		@ 20MHz	-155.3269	
Phase Jitter, RMS	tjrms	Integration Bandwidth 12kHz - 20MHz	580.0190	fs

©2017 CTS® Corporation. Information/product(s) subject to change. No warranty that product(s) will meet the stated specifications for customer specific applications or test equipment. Visit www.ctscorp.com for list of applicable patent(s), more information, or to request a quote.

Electrical Specifications

Performance Data

Phase Noise [typical]

155.52MHz, LVPECL, V_{CC} = +3.3V, V_C = +1.65V, T_A = +25°C

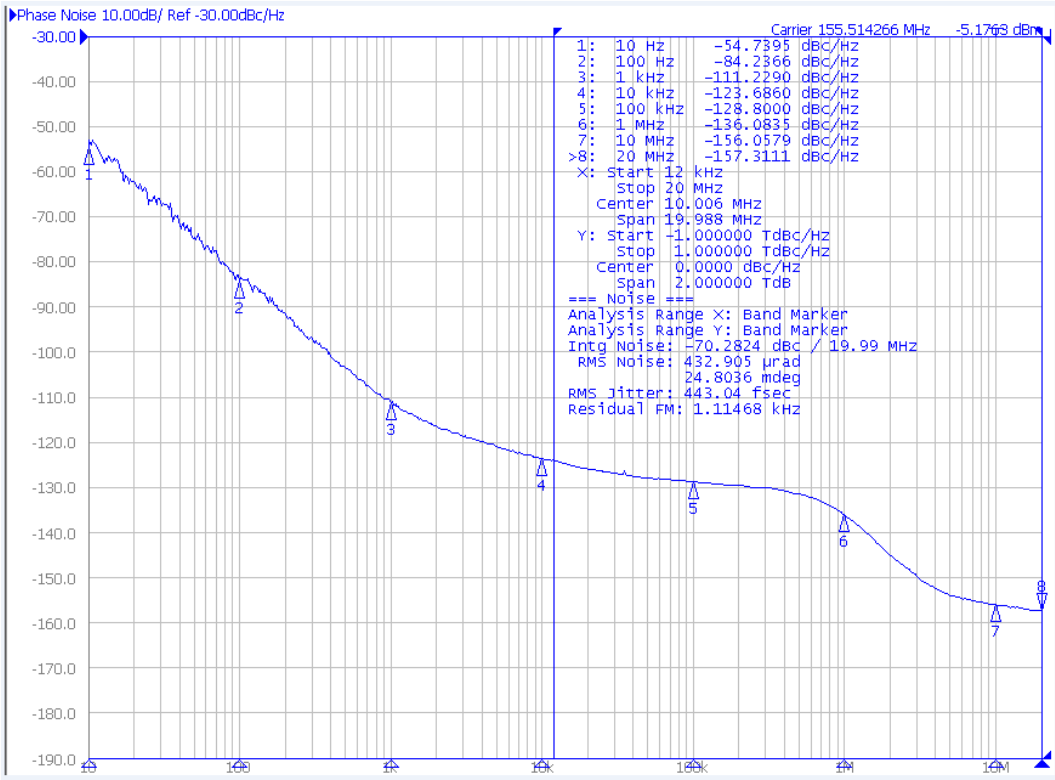

Phase Noise Tabulated

155.52MHz, LVPECL, V_{CC} = +3.3V, V_C = +1.65V, T_A = +25°C

PARAMETER	SYMBOL	CONDITIONS	TYP	UNIT
LVPECL @ 155.52MHz				
Phase Noise		Single Side Band		
		@ 10Hz	-54.7395	
		@ 100Hz	-84.2366	
		@ 1kHz	-111.2290	
	-	@ 10kHz	-123.6860	dBc/Hz
		@ 100kHz	-128.8000	
		@ 1MHz	-136.0835	
		@ 10MHz	-156.0579	
		@ 20MHz	-157.3111	
Phase Jitter, RMS	tjrms	Integration Bandwidth 12kHz - 20MHz	443.0400	fs

©2017 CTS® Corporation. Information/product(s) subject to change. No warranty that product(s) will meet the stated specifications for customer specific applications or test equipment. Visit www.ctscorp.com for list of applicable patent(s), more information, or to request a quote.

Mechanical Specifications

Package Drawing

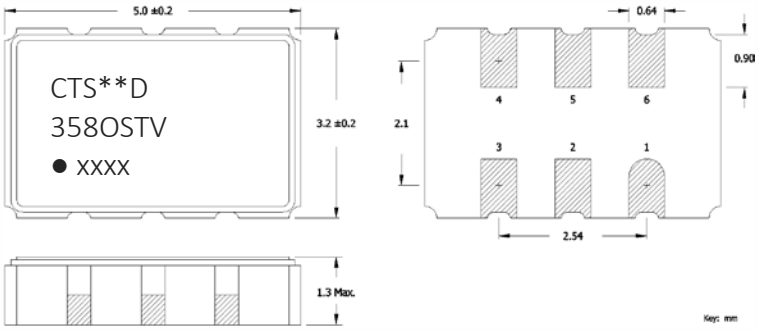

Marking Information

1. ** – Manufacturing Site Code.
2. D – Date Code. See Table I for codes.
3. O – Output Type; P = LVPECL, L = LVDS.
4. ST – Frequency Stability/Temperature Code. [Refer to Ordering Information]
5. V – Voltage Code; 3 = 3.3V, 2 = 2.5V.
6. xxxx – Frequency Code.
   3-digits, frequencies below 100MHz
   4-digits, frequencies 100MHz or greater

[See document 016-1454-0, Frequency Code Tables.]

Recommended Pad Layout

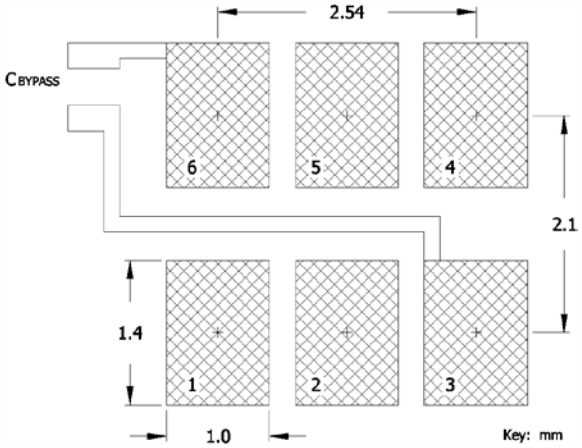

Notes

1. JEDEC termination code (e4). Barrier-plating is nickel [Ni] with gold [Au] flash plate.
2. Reflow conditions per JEDEC J-STD-020; +260°C maximum, 20 seconds.
3. MSL = 1.

Pin Assignments

Pin	Symbol	Function
1	V_C	Voltage Control
2	EOH	Enable [tri-state]
3	GND	Circuit & Package Ground
4	Output	RF Output
5	$\overline{\text{Output}}$	Complimentary RF Output
6	V_{CC}	Supply Voltage

Table I - Date Code

YEAR \ MONTH					JAN	FEB	MAR	APR	MAY	JUN	JUL	AUG	SEP	OCT	NOV	DEC
2001	2005	2009	2013	2017	A	B	C	D	E	F	G	H	J	K	L	M
2002	2006	2010	2014	2018	N	P	Q	R	S	T	U	V	W	X	Y	Z
2003	2007	2011	2015	2019	a	b	c	d	e	f	g	h	j	k	l	m
2004	2008	2012	2016	2020	n	p	q	r	s	t	u	v	w	x	y	z

©2017 CTS® Corporation. Information/product(s) subject to change. No warranty that product(s) will meet the stated specifications for customer specific applications or test equipment. Visit www.ctscorp.com for list of applicable patent(s), more information, or to request a quote.

Packaging - Tape and Reel

Tape Drawing – 12mm Width

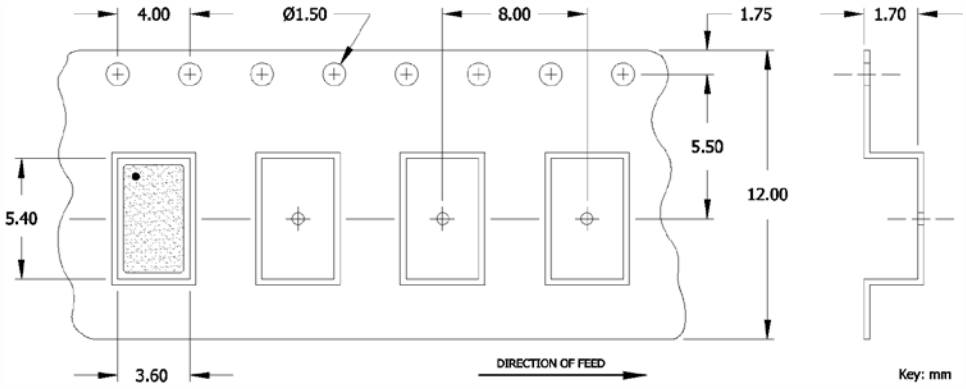

Tape Drawing – 16mm Width

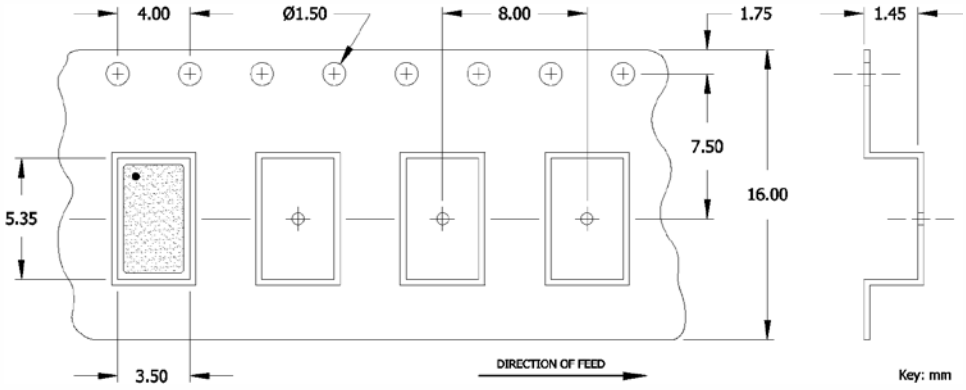

©2017 CTS® Corporation. Information/product(s) subject to change. No warranty that product(s) will meet the stated specifications for customer specific applications or test equipment. Visit www.ctscorp.com for list of applicable patent(s), more information, or to request a quote.

Packaging - Tape and Reel

Reel Drawing – 12mm Width

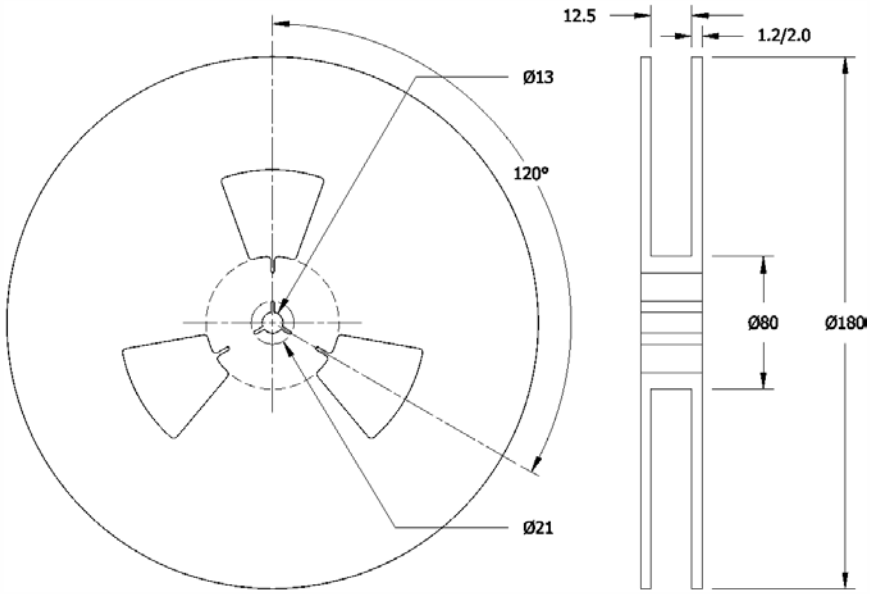

Reel Drawing – 16mm Width

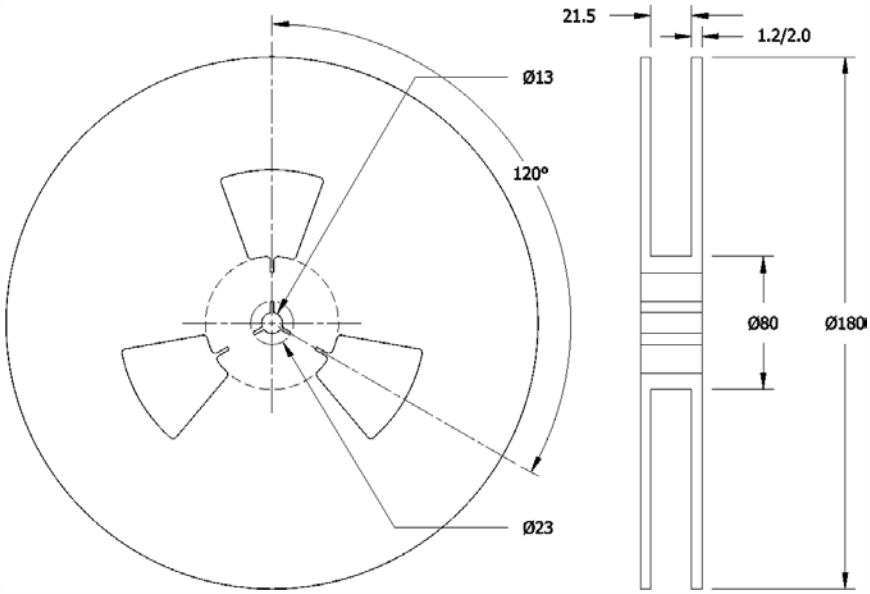

Notes

1. Device quantity is 1k pieces per 180mm reel.
2. Complete CTS part number, frequency value and date code information must appear on reel and carton labels.

©2017 CTS® Corporation. Information/product(s) subject to change. No warranty that product(s) will meet the stated specifications for customer specific applications or test equipment. Visit www.ctscorp.com for list of applicable patent(s), more information, or to request a quote.

Addendum

Additional Developed Frequencies – MHz

FREQUENCY	FREQUENCY CODE	FREQUENCY	FREQUENCY CODE	FREQUENCY	FREQUENCY CODE	FREQUENCY	FREQUENCY CODE
27.000000	270	74.175800	74A	144.500000	1445	322.265625	322A
38.840000	38D	76.800000	768	148.351648	148B	349.400000	3494
38.880000	388	86.700000	867	150.000000	1500	400.000000	4000
43.350000	433	87.351542	873	153.600000	1536	448.000000	4480
45.000000	450	92.160000	921	156.253906	156A	622.080000	6220
54.000000	540	106.250000	1062	160.000000	1600		
62.500000	625	132.000000	1320	184.320000	1843		

Frequency Codes for Cover Page Table – MHz

FREQUENCY	FREQUENCY CODE	FREQUENCY	FREQUENCY CODE	FREQUENCY	FREQUENCY CODE
25.000000	250	122.880000	1228	200.000000	2000
50.000000	500	125.000000	1250	250.000000	2500
74.250000	742	148.500000	1485	300.000000	3000
77.760000	777	155.520000	1555	312.500000	3125
100.000000	1000	156.250000	1562		

©2017 CTS® Corporation. Information/product(s) subject to change. No warranty that product(s) will meet the stated specifications for customer specific applications or test equipment. Visit www.ctscorp.com for list of applicable patent(s), more information, or to request a quote.