# AS85049/25 and MS3437C
# Straight EMI/RFI Non-Environmental Backshell

| CONNECTOR DESIGNATOR: | |
|---|---|
| A | AS50151 Series AS34001<br>MIL-DTL-26482 Series II<br>AS81703 Series III<br>MIL-DTL-83723 Series I & III<br>40M39569, DEF 5326-3, EN 2997<br>EN 3646, ESC 10, ESC 11, LN 29504<br>NFC93422 Series HE302<br>PAN 6432-1, PAN 6432-2, PATT 602 |

| Basic Part Number | | Dash Number (Table II) | |
|---|---|---|---|
| M85049/25 | - | 21 | N |

**Finish / Material**

*B = Black Cadmium / Stainless Steel*
*N = Electroless Nickel / Aluminum*
*S = Passivated / Stainless Steel*
*W = 1,000 Hr. Cadmium Olive Drab over Electroless Nickel / Aluminum*
*X = Aluminum, Nickel Fluorocarbon Polymer*
*Z = Aluminum, Zinc-Nickel, Black*
*XS = Stainless Steel, Nickel Flurocarbon Polymer*
*ZS = Stainless Steel, Zinc-Nickel, Black*

**Superseded Part Number**

MS3188C 21 N

Basic Part No. | Dash No. | Finish

**Finish**
**(Material is Aluminum Only)**

A = Cadmium Olive Drab over Nickel
C = Cadmium Olive Drab
N = Electroless Nickel



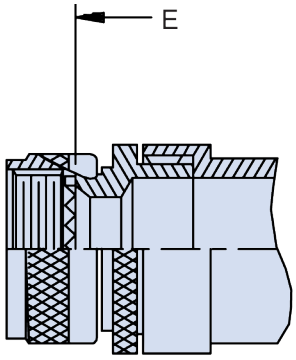


STYLE 2

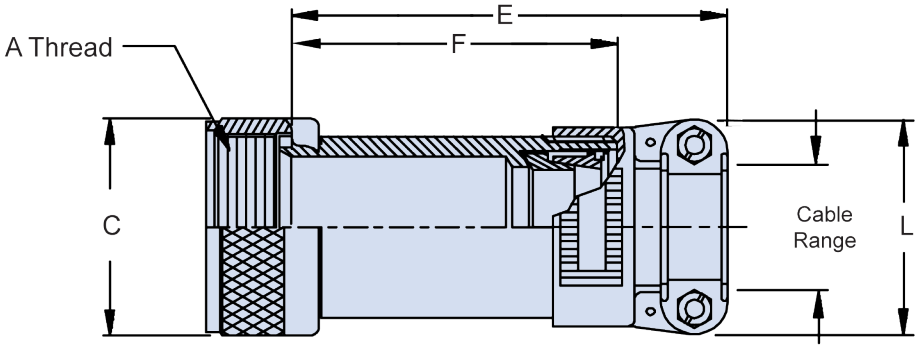


STYLE 1

## APPLICATION NOTES

1. For complete dimensions see the applicable Military Specification.
2. When maximum cable entry is exceeded, Style 2 will be supplied.
3. Metric dimensions (mm) are in parentheses.
4. Cable Range is defined as the accommodation range for the wire bundle or cable. Dimensions shown are not intended for inspection criteria.

Dimensions in inches (millimeters) and are subject to change without notice.

© 2013 Glenair, Inc. U.S. CAGE Code 06324 Printed in U.S.A.

# AS85049/25 and MS3437C
# Straight EMI/RFI Non-Environmental Backshell



| TABLE I: Shell Size | | |
|---|---|---|
| Dash No. | A Thread Class 2B | C Dia Ref |
| 03 | .562 - 24 UNEF | .77 (19.6) |
| 08 | .500 - 20 UNF | .65 (16.5) |
| 10 | .625 - 24 UNEF | .77 (19.6) |
| 12 | .750 - 20 UNEF | .40 (10.2) |
| 14 | .875 - 20 UNEF | 1.02 (25.9) |
| 16 | 1.000 - 20 UNEF | 1.21 (30.7) |
| 18 | 1.062 - 18 UNEF | 1.23 (31.2) |
| 20 | 1.188 - 18 UNEF | 1.36 (34.5) |
| 22 | 1.313 - 18 UNEF | 1.48 (37.6) |
| 24 | 1.438 - 18 UNEF | 1.73 (43.9) |
| 28 | 1.750 - 18 UNS | 1.97 (50.0) |
| 32 | 2.000 - 18 UNS | 2.22 (56.4) |
| 36 | 2.250 - 16 UN | 2.47 (62.7) |
| 40 | 2.500 - 16 UN | 2.72 (69.1) |
| 44 | 2.750 - 16 UN | 2.97 (75.4) |
| 48 | 3.000 - 16 UN | 3.22 (81.8) |
| 61 | 1.500 - 18 UNEF | 1.67 (42.4) |

***Refer to the Mil-Spec for Complete Dimensions***

| TABLE II: Dash Number, Dimensions and Cable Range | | | | | | | | |
|---|---|---|---|---|---|---|---|---|
| Dash No. | Shell Size | Style | E Max | F Ref. | L Max | Cable Range Min | Cable Range Max | M85049/42 Ref. |
| 01 | 03 | 1 | 2.062 (52.4) | 1.027 (26.1) | .957 (24.3) | .125 (3.2) | .250 (6.4) | 4 |
| 02 | 03 | 1 | 3.063 (77.8) | 1.027 (26.1) | .957 (24.3) | .125 (3.2) | .250 (6.4) | 4 |
| 03 | 03 | 2 | 2.812 (71.4) | 1.027 (26.1) | 1.145 (29.1) | .250 (6.4) | .437 (11.1) | 6 |
| 04 | 03 | 2 | 3.812 (96.8) | 1.027 (26.1) | 1.145 (29.1) | .250 (6.4) | .437 (11.1) | 6 |
| 05 | 08 | 1 | 2.062 (52.4) | 1.027 (26.1) | .957 (24.3) | .125 (3.2) | .250 (6.4) | 4 |
| 06 | 08 | 1 | 3.062 (77.8) | 1.027 (26.1) | .957 (24.3) | .125 (3.2) | .250 (6.4) | 4 |
| 07 | 08 | 2 | 2.812 (71.4) | 1.027 (26.1) | 1.145 (29.1) | .250 (6.4) | .437 (11.1) | 6 |
| 08 | 08 | 2 | 3.812 (96.8) | 1.027 (26.1) | 1.145 (29.1) | .250 (6.4) | .437 (11.1) | 6 |
| 09 | 10 | 1 | 2.062 (52.4) | 1.027 (26.1) | .957 (24.3) | .125 (3.2) | .312 (7.9) | 4 |
| 10 | 10 | 1 | 3.062 (77.8) | 1.027 (26.1) | .957 (24.3) | .125 (3.2) | .312 (7.9) | 4 |
| 11 | 10 | 2 | 2.812 (71.4) | 1.027 (26.1) | 1.145 (29.1) | .250 (6.4) | .437 (11.1) | 6 |
| 12 | 10 | 2 | 3.812 (96.8) | 1.027 (26.1) | 1.145 (29.1) | .250 (6.4) | .437 (11.1) | 6 |
| 13 | 12 | 1 | 2.062 (52.4) | 1.027 (26.1) | 1.145 (29.1) | .250 (6.4) | .437 (11.1) | 6 |
| 14 | 12 | 1 | 3.062 (77.8) | 1.027 (26.1) | 1.145 (29.1) | .250 (6.4) | .437 (11.1) | 6 |
| 15 | 12 | 2 | 2.812 (71.4) | 1.027 (26.1) | 1.332 (33.8) | .350 (8.9) | .625 (15.9) | 10 |
| 16 | 12 | 2 | 3.812 (96.8) | 1.027 (26.1) | 1.332 (33.8) | .350 (8.9) | .625 (15.9) | 10 |
| 17 | 14 | 1 | 2.062 (52.4) | 1.027 (26.1) | 1.332 (33.8) | .350 (8.9) | .575 (14.6) | 10 |
| 18 | 14 | 1 | 3.062 (77.8) | 1.027 (26.1) | 1.332 (33.8) | .350 (8.9) | .575 (14.6) | 10 |
| 19 | 14 | 2 | 2.812 (71.4) | 1.059 (26.9) | 1.551 (39.4) | .500 (12.7) | .750 (19.1) | 12 |
| 20 | 14 | 2 | 3.812 (96.8) | 1.059 (26.9) | 1.551 (39.4) | .500 (12.7) | .750 (19.1) | 12 |
| 21 | 16 | 1 | 2.062 (52.4) | 1.059 (26.9) | 1.551 (39.4) | .500 (12.7) | .700 (17.8) | 12 |
| 22 | 16 | 1 | 3.062 (77.8) | 1.059 (26.9) | 1.551 (39.4) | .500 (12.7) | .700 (17.8) | 12 |
| 23 | 16 | 2 | 2.812 (71.4) | 1.156 (29.4) | 1.770 (45.0) | .625 (15.9) | .937 (23.8) | 16 |
| 24 | 16 | 2 | 3.812 (96.8) | 1.156 (29.4) | 1.770 (45.0) | .625 (15.9) | .937 (23.8) | 16 |
| 25 | 18 | 1 | 2.062 (52.4) | 1.027 (26.1) | 1.332 (33.8) | .350 (8.9) | .625 (15.9) | 10 |
| 26 | 18 | 1 | 3.062 (77.8) | 1.027 (26.1) | 1.332 (33.8) | .350 (8.9) | .625 (15.9) | 10 |
| 27 | 18 | 1 | 2.062 (52.4) | 1.059 (26.9) | 1.551 (39.4) | .500 (12.7) | .750 (19.1) | 12 |
| 28 | 18 | 1 | 3.062 (77.8) | 1.059 (26.9) | 1.551 (39.4) | .500 (12.7) | .750 (19.1) | 12 |
| 29 | 18 | 2 | 2.812 (71.4) | 1.156 (29.4) | 1.770 (45.0) | .625 (15.9) | .937 (23.8) | 16 |
| 30 | 18 | 2 | 3.812 (96.8) | 1.156 (29.4) | 1.770 (45.0) | .625 (15.9) | .937 (23.8) | 16 |
| 31 | 20 | 1 | 3.062 (77.8) | 1.027 (26.1) | 1.332 (33.8) | .350 (8.9) | .625 (15.9) | 10 |
| 32 | 20 | 1 | 4.062 (103.2) | 1.027 (26.1) | 1.332 (33.8) | .350 (8.9) | .625 (15.9) | 10 |
| 33 | 20 | 1 | 3.062 (77.8) | 1.059 (26.9) | 1.551 (39.4) | .500 (12.7) | .750 (19.1) | 12 |
| 34 | 20 | 1 | 4.062 (103.2) | 1.059 (26.9) | 1.551 (39.4) | .500 (12.7) | .750 (19.1) | 12 |
| 35 | 20 | 2 | 3.812 (96.8) | 1.156 (29.4) | 1.770 (45.0) | .625 (15.9) | .937 (23.8) | 16 |
| 36 | 20 | 2 | 4.812 (122.2) | 1.156 (29.4) | 1.770 (45.0) | .625 (15.9) | .937 (23.8) | 16 |
| 37 | 20 | 2 | 3.812 (96.8) | 1.375 (34.9) | 2.113 (53.7) | .875 (22.2) | 1.250 (31.8) | 20 |
| 38 | 20 | 2 | 4.812 (122.2) | 1.375 (34.9) | 2.113 (53.7) | .875 (22.2) | 1.250 (31.8) | 20 |
| 39 | 22 | 1 | 3.062 (77.8) | 1.027 (26.1) | 1.332 (33.8) | .350 (8.9) | .625 (15.9) | 10 |
| 40 | 22 | 1 | 4.062 (103.2) | 1.027 (26.1) | 1.332 (33.8) | .350 (8.9) | .625 (15.9) | 10 |
| 41 | 22 | 1 | 3.062 (77.8) | 1.059 (26.9) | 1.551 (39.4) | .500 (12.7) | .750 (19.1) | 12 |
| 42 | 22 | 1 | 4.062 (103.2) | 1.059 (26.9) | 1.551 (39.4) | .500 (12.7) | .750 (19.1) | 12 |
| 43 | 22 | 1 | 3.062 (77.8) | 1.156 (29.4) | 1.770 (45.0) | .625 (15.9) | .937 (23.8) | 16 |
| 44 | 22 | 1 | 4.062 (103.2) | 1.156 (29.4) | 1.770 (45.0) | .625 (15.9) | .937 (23.8) | 16 |
| 45 | 22 | 2 | 3.812 (96.8) | 1.375 (34.9) | 2.113 (53.7) | .875 (22.2) | 1.250 (31.8) | 20 |
| 46 | 22 | 2 | 4.812 (122.2) | 1.375 (34.9) | 2.113 (53.7) | .875 (22.2) | 1.250 (31.8) | 20 |
| 47 | 24 | 1 | 3.062 (77.8) | 1.059 (26.9) | 1.551 (39.4) | .500 (12.7) | .750 (19.1) | 12 |
| 48 | 24 | 1 | 4.062 (103.2) | 1.059 (26.9) | 1.551 (39.4) | .500 (12.7) | .750 (19.1) | 12 |
| 49 | 24 | 1 | 3.062 (77.8) | 1.156 (29.4) | 1.770 (45.0) | .625 (15.9) | .812 (20.6) | 16 |
| 50 | 24 | 1 | 4.062 (103.2) | 1.156 (29.4) | 1.770 (45.0) | .625 (15.9) | .812 (20.6) | 16 |
| 51 | 24 | 1 | 3.062 (77.8) | 1.156 (29.4) | 1.770 (45.0) | .625 (15.9) | .937 (23.8) | 16 |
| 52 | 24 | 1 | 4.062 (103.2) | 1.156 (29.4) | 1.770 (45.0) | .625 (15.9) | .937 (23.8) | 16 |

**Continued on Page B-49**

Dimensions in inches (millimeters) and are subject to change without notice.

© 2013 Glenair, Inc.
U.S. CAGE Code 06324
Printed in U.S.A.

| TABLE II: Continued from Page B-48 | | | | | | | | |
|---|---|---|---|---|---|---|---|---|
| Dash No. | Shell Size | Style | E Max | F Ref. | L Max | Cable Range Min | Cable Range Max | M85049/42 Ref. |
| 53 | 24 | 2 | 3.812 (96.8) | 1.375 (34.9) | 2.113 (53.7) | .875 (22.2) | 1.250 (31.8) | 20 |
| 54 | 24 | 2 | 4.812 (122.2) | 1.375 (34.9) | 2.113 (53.7) | .875 (22.2) | 1.250 (31.8) | 20 |
| 55 | 28 | 1 | 3.062 (77.8) | 1.059 (26.9) | 1.551 (39.4) | .500 (12.7) | .750 (19.1) | 12 |
| 56 | 28 | 1 | 4.062 (103.2) | 1.059 (26.9) | 1.551 (39.4) | .500 (12.7) | .750 (19.1) | 12 |
| 57 | 28 | 1 | 3.062 (77.8) | 1.156 (29.4) | 1.770 (45.0) | .625 (15.9) | .937 (23.8) | 16 |
| 58 | 28 | 1 | 4.062 (103.2) | 1.156 (29.4) | 1.770 (45.0) | .625 (15.9) | .937 (23.8) | 16 |
| 59 | 28 | 1 | 3.062 (77.8) | 1.375 (34.9) | 2.113 (53.7) | .875 (22.2) | 1.250 (31.8) | 20 |
| 60 | 28 | 1 | 4.062 (103.2) | 1.375 (34.9) | 2.113 (53.7) | .875 (22.2) | 1.250 (31.8) | 20 |
| 61 | 28 | 1 | 3.062 (77.8) | 1.500 (38.1) | 2.363 (60.0) | 1.000 (25.4) | 1.375 (34.9) | 24 |
| 62 | 28 | 1 | 4.062 (103.2) | 1.500 (38.1) | 2.363 (60.0) | 1.000 (25.4) | 1.375 (34.9) | 24 |
| 63 | 32 | 1 | 3.062 (77.8) | 1.156 (29.4) | 1.770 (45.0) | .625 (15.9) | .937 (23.8) | 16 |
| 64 | 32 | 1 | 4.062 (103.2) | 1.156 (29.4) | 1.770 (45.0) | .625 (15.9) | .937 (23.8) | 16 |
| 65 | 32 | 1 | 3.062 (77.8) | 1.375 (34.9) | 2.113 (53.7) | .875 (22.2) | 1.250 (31.8) | 20 |
| 66 | 32 | 1 | 4.062 (103.2) | 1.375 (34.9) | 2.113 (53.7) | .875 (22.2) | 1.250 (31.8) | 20 |
| 67 | 32 | 1 | 3.062 (77.8) | 1.500 (38.1) | 2.363 (60.0) | 1.000 (25.4) | 1.375 (34.9) | 24 |
| 68 | 32 | 1 | 4.062 (103.2) | 1.500 (38.1) | 2.363 (60.0) | 1.000 (25.4) | 1.375 (34.9) | 24 |
| 69 | 32 | 1 | 3.062 (77.8) | 1.781 (45.2) | 2.770 (70.4) | 1.250 (31.8) | 1.625 (41.3) | 28 |
| 70 | 32 | 1 | 4.062 (103.2) | 1.781 (45.2) | 2.770 (70.4) | 1.250 (31.8) | 1.625 (41.3) | 28 |
| 71 | 36 | 1 | 4.062 (103.2) | 1.375 (34.9) | 2.113 (53.7) | .875 (22.2) | 1.250 (31.8) | 20 |
| 72 | 36 | 1 | 5.062 (128.6) | 1.375 (34.9) | 2.113 (53.7) | .875 (22.2) | 1.250 (31.8) | 20 |
| 73 | 36 | 1 | 4.062 (103.2) | 1.500 (38.1) | 2.363 (60.0) | 1.000 (25.4) | 1.375 (34.9) | 24 |
| 74 | 36 | 1 | 5.062 (128.6) | 1.500 (38.1) | 2.363 (60.0) | 1.000 (25.4) | 1.375 (34.9) | 24 |
| 75 | 36 | 1 | 4.062 (103.2) | 1.781 (45.2) | 2.770 (70.4) | 1.250 (31.8) | 1.625 (41.3) | 28 |
| 76 | 36 | 1 | 5.062 (128.6) | 1.781 (45.2) | 2.770 (70.4) | 1.250 (31.8) | 1.625 (41.3) | 28 |
| 77 | 36 | 2 | 4.942 (125.5) | 1.830 (46.5) | 3.020 (76.7) | 1.437 (36.5) | 1.875 (47.6) | 32 |
| 78 | 36 | 2 | 5.942 (150.9) | 1.830 (46.5) | 3.020 (76.7) | 1.437 (36.5) | 1.875 (47.6) | 32 |
| 79 | 40 | 1 | 4.062 (103.2) | 1.375 (34.9) | 2.113 (53.7) | .875 (22.2) | 1.250 (31.8) | 20 |
| 80 | 40 | 1 | 5.062 (128.6) | 1.375 (34.9) | 2.113 (53.7) | .875 (22.2) | 1.250 (31.8) | 20 |
| 81 | 40 | 1 | 4.062 (103.2) | 1.500 (38.1) | 2.363 (60.0) | 1.000 (25.4) | 1.375 (34.9) | 24 |
| 82 | 40 | 1 | 5.062 (128.6) | 1.500 (38.1) | 2.363 (60.0) | 1.000 (25.4) | 1.375 (34.9) | 24 |
| 83 | 40 | 1 | 4.062 (103.2) | 1.781 (45.2) | 2.770 (70.4) | 1.250 (31.8) | 1.625 (41.3) | 28 |
| 84 | 40 | 1 | 5.062 (128.6) | 1.781 (45.2) | 2.770 (70.4) | 1.250 (31.8) | 1.625 (41.3) | 28 |
| 85 | 40 | 1 | 4.062 (103.2) | 1.830 (46.5) | 3.020 (76.7) | 1.437 (36.5) | 1.875 (47.6) | 32 |
| 86 | 40 | 1 | 5.062 (128.6) | 1.830 (46.5) | 3.020 (76.7) | 1.437 (36.5) | 1.875 (47.6) | 32 |
| 87 | 44 | 1 | 4.062 (103.2) | 1.375 (34.9) | 2.113 (53.7) | .875 (22.2) | 1.250 (31.8) | 20 |
| 88 | 44 | 1 | 5.062 (128.6) | 1.375 (34.9) | 2.113 (53.7) | .875 (22.2) | 1.250 (31.8) | 20 |
| 89 | 44 | 1 | 4.062 (103.2) | 1.500 (38.1) | 2.363 (60.0) | 1.000 (25.4) | 1.375 (34.9) | 24 |
| 90 | 44 | 1 | 5.062 (128.6) | 1.500 (38.1) | 2.363 (60.0) | 1.000 (25.4) | 1.375 (34.9) | 24 |
| 91 | 44 | 1 | 4.062 (103.2) | 1.781 (45.2) | 2.770 (70.4) | 1.250 (31.8) | 1.625 (41.3) | 28 |
| 92 | 44 | 1 | 5.062 (128.6) | 1.781 (45.2) | 2.770 (70.4) | 1.250 (31.8) | 1.625 (41.3) | 28 |
| 93 | 44 | 1 | 4.062 (103.2) | 1.830 (46.5) | 3.020 (76.7) | 1.437 (36.5) | 1.875 (47.6) | 32 |
| 94 | 44 | 1 | 5.062 (128.6) | 1.830 (46.5) | 3.020 (76.7) | 1.437 (36.5) | 1.875 (47.6) | 32 |
| 95 | 48 | 1 | 4.062 (103.2) | 1.375 (34.9) | 2.113 (53.7) | .875 (22.2) | 1.250 (31.8) | 20 |
| 96 | 48 | 1 | 5.062 (128.6) | 1.375 (34.9) | 2.113 (53.7) | .875 (22.2) | 1.250 (31.8) | 20 |
| 97 | 48 | 1 | 4.062 (103.2) | 1.500 (38.1) | 2.363 (60.0) | 1.000 (25.4) | 1.375 (34.9) | 24 |
| 98 | 48 | 1 | 5.062 (128.6) | 1.500 (38.1) | 2.363 (60.0) | 1.000 (25.4) | 1.375 (34.9) | 24 |
| 99 | 48 | 1 | 4.062 (103.2) | 1.781 (45.2) | 2.770 (70.4) | 1.250 (31.8) | 1.625 (41.3) | 28 |
| 100 | 48 | 1 | 5.062 (128.6) | 1.781 (45.2) | 2.770 (70.4) | 1.250 (31.8) | 1.625 (41.3) | 28 |
| 101 | 48 | 1 | 4.062 (103.2) | 1.830 (46.5) | 3.020 (76.7) | 1.437 (36.5) | 1.875 (47.6) | 32 |
| 102 | 48 | 1 | 5.062 (128.6) | 1.830 (46.5) | 3.020 (76.7) | 1.437 (36.5) | 1.875 (47.6) | 32 |
| 103 | 61 | 1 | 3.062 (77.8) | 1.059 (26.9) | 1.551 (39.4) | .500 (12.7) | .750 (19.1) | 12 |
| 104 | 61 | 1 | 4.062 (103.2) | 1.059 (26.9) | 1.551 (39.4) | .500 (12.7) | .750 (19.1) | 12 |

Continued on Page B-50

Dimensions in inches (millimeters) and are subject to change without notice.

© 2013 Glenair, Inc.
U.S. CAGE Code 06324
Printed in U.S.A.

# AS85049/25 and MS3437C
# Straight EMI/RFI Non-Environmental Backshell



| TABLE II: Continued from Page B-49 | | | | | | | | |
|---|---|---|---|---|---|---|---|---|
| Dash No. | Shell Size | Style | E Max | F Ref. | L Max | Cable Range Min | Cable Range Max | M85049/42 Ref. |
| 105 | 61 | 1 | 3.062 (77.8) | 1.156 (29.4) | 1.770 (45.0) | .625 (15.9) | .937 (23.8) | 16 |
| 106 | 61 | 1 | 4.062 (103.2) | 1.156 (29.4) | 1.770 (45.0) | .625 (15.9) | .937 (23.8) | 16 |
| 107 | 61 | 2 | 3.812 (96.8) | 1.375 (34.9) | 2.113 (53.7) | .875 (22.2) | 1.250 (31.8) | 20 |
| 108 | 61 | 2 | 4.812 (122.2) | 1.375 (34.9) | 2.113 (53.7) | .875 (22.2) | 1.250 (31.8) | 20 |
| 109 | 61 | 2 | 3.812 (96.8) | 1.500 (38.1) | 2.363 (60.0) | 1.000 (25.4) | 1.375 (34.9) | 24 |
| 110 | 61 | 2 | 4.812 (122.2) | 1.500 (38.1) | 2.363 (60.0) | 1.000 (25.4) | 1.375 (34.9) | 24 |
| 111 | 12 | 1 | 2.062 (52.4) | 1.027 (26.1) | 1.332 (33.8) | .350 (8.9) | .500 (12.7) | 10 |
| 112 | 16 | 1 | 2.062 (52.4) | 1.027 (26.1) | 1.145 (29.1) | .250 (6.4) | .437 (11.1) | 06 |
| 113 | 16 | 1 | 3.062 (77.8) | 1.027 (26.1) | 1.145 (29.1) | .250 (6.4) | .437 (11.1) | 06 |
| 114 | 12 | 1 | 2.062 (52.4) | 1.027 (26.1) | .957 (24.3) | .125 (3.2) | .312 (7.9) | 04 |
| 115 | 12 | 1 | 3.062 (77.8) | 1.027 (26.1) | .957 (24.3) | .125 (3.2) | .312 (7.9) | 04 |
| 116 | 14 | 1 | 2.062 (52.4) | 1.027 (26.1) | 1.145 (29.1) | .250 (6.4) | .437 (11.1) | 06 |
| 117 | 14 | 1 | 3.062 (77.8) | 1.027 (26.1) | 1.145 (29.1) | .250 (6.4) | .437 (11.1) | 06 |
| 118 | 16 | 1 | 2.062 (52.4) | 1.027 (26.1) | 1.332 (33.8) | .350 (8.9) | .625 (15.9) | 10 |
| 119 | 16 | 1 | 3.062 (77.8) | 1.027 (26.1) | 1.332 (33.8) | .350 (8.9) | .625 (15.9) | 10 |
| 120 | 18 | 1 | 2.062 (52.4) | 1.027 (26.1) | .957 (24.3) | .125 (3.2) | .312 (7.9) | 04 |
| 121 | 18 | 1 | 3.062 (77.8) | 1.027 (26.1) | .957 (24.3) | .125 (3.2) | .312 (7.9) | 04 |
| 122 | 18 | 1 | 2.062 (52.4) | 1.027 (26.1) | 1.145 (29.1) | .250 (6.4) | .437 (11.1) | 06 |
| 123 | 18 | 1 | 3.062 (77.8) | 1.027 (26.1) | 1.145 (29.1) | .250 (6.4) | .437 (11.1) | 06 |
| 124 | 20 | 1 | 3.062 (77.8) | 1.027 (26.1) | 1.145 (29.1) | .250 (6.4) | .437 (11.1) | 06 |
| 125 | 20 | 1 | 4.062 (103.2) | 1.027 (26.1) | 1.145 (29.1) | .250 (6.4) | .437 (11.1) | 06 |
| 126 | 22 | 1 | 3.062 (77.8) | 1.027 (26.1) | .957 (24.3) | .125 (3.2) | .312 (7.9) | 04 |
| 127 | 22 | 1 | 4.062 (103.2) | 1.027 (26.1) | .957 (24.3) | .125 (3.2) | .312 (7.9) | 04 |
| 128 | 22 | 1 | 3.062 (77.8) | 1.027 (26.1) | 1.145 (29.1) | .250 (6.4) | .437 (11.1) | 0 |
| 129 | 22 | 1 | 4.062 (103.2) | 1.027 (26.1) | 1.145 (29.1) | .250 (6.4) | .437 (11.1) | 06 |
| 130 | 24 | 1 | 3.062 (77.8) | 1.027 (26.1) | 1.332 (33.8) | .350 (8.9) | .625 (15.9) | 10 |
| 131 | 24 | 1 | 4.062 (103.2) | 1.027 (26.1) | 1.332 (33.8) | .350 (8.9) | .625 (15.9) | 10 |
| 132 | 36 | 1 | 4.062 (103.2) | 1.059 (26.9) | 1.551 (39.4) | .500 (12.7) | .750 (19.1) | 12 |
| 133 | 36 | 1 | 5.062 (128.6) | 1.059 (26.9) | 1.551 (39.4) | .500 (12.7) | .750 (19.1) | 12 |
| 134 | 40 | 1 | 4.062 (103.2) | 1.059 (26.9) | 1.551 (39.4) | .500 (12.7) | .750 (19.1) | 12 |
| 135 | 40 | 1 | 5.062 (128.6) | 1.059 (26.9) | 1.551 (39.4) | .500 (12.7) | .750 (19.1) | 12 |
| 136 | 10 | 1 | 2.062 (52.4) | 1.027 (26.1) | 1.145 (29.1) | .250 (6.4) | .375 (9.5) | 06 |
| 137 | 10 | 1 | 3.062 (77.8) | 1.027 (26.1) | 1.145 (29.1) | .250 (6.4) | .375 (9.5) | 06 |
| 138 | 12 | 1 | 2.062 (52.4) | 1.027 (26.1) | 1.332 (33.8) | .350 (8.9) | .500 (12.7) | 10 |
| 139 | 12 | 1 | 3.062 (77.8) | 1.027 (26.1) | 1.332 (33.8) | .350 (8.9) | .500 (12.7) | 10 |
| 140 | 20 | 1 | 3.062 (77.8) | 1.156 (29.4) | 1.770 (45.0) | .625 (15.9) | .904 (23.0) | 16 |
| 141 | 20 | 1 | 4.062 (103.2) | 1.156 (29.4) | 1.770 (45.0) | .625 (15.9) | .904 (23.0) | 16 |
| 142 | 22 | 1 | 3.062 (77.8) | 1.375 (34.9) | 2.113 (53.7) | .875 (22.2) | 1.029 (26.1) | 20 |
| 143 | 22 | 1 | 4.062 (103.2) | 1.375 (34.9) | 2.113 (53.7) | .875 (22.2) | 1.029 (26.1) | 20 |
| 144 | 24 | 1 | 3.062 (77.8) | 1.375 (34.9) | 2.113 (53.7) | .875 (22.2) | 1.144 (29.1) | 20 |
| 145 | 24 | 1 | 4.062 (103.2) | 1.375 (34.9) | 2.113 (53.7) | .875 (22.2) | 1.144 (29.1) | 20 |
| 146 | 36 | 1 | 4.062 (103.2) | 1.830 (46.5) | 3.020 (76.7) | 1.437 (36.5) | 1.840 (46.7) | 32 |
| 147 | 36 | 1 | 5.062 (128.6) | 1.830 (46.5) | 3.020 (76.7) | 1.437 (36.5) | 1.840 (46.7) | 32 |
| 148 | 36 | 1 | 4.062 (103.2) | 1.156 (29.4) | 1.770 (45.0) | .625 (15.9) | .937 (23.8) | 16 |
| 149 | 36 | 1 | 5.062 (128.6) | 1.156 (29.4) | 1.770 (45.0) | .625 (15.9) | .937 (23.8) | 16 |
| 150 | 14 | 1 | 2.062 (52.4) | 1.027 (26.1) | .957 (24.3) | .125 (3.2) | .312 (7.9) | 04 |
| 151 | 14 | 1 | 3.062 (77.8) | 1.027 (26.1) | .957 (24.3) | .125 (3.2) | .312 (7.9) | 04 |
| 152 | 16 | 1 | 2.062 (52.4) | 1.027 (26.1) | .957 (24.3) | .125 (3.2) | .312 (7.9) | 04 |
| 153 | 16 | 1 | 3.062 (77.8) | 1.027 (26.1) | .957 (24.3) | .125 (3.2) | .312 (7.9) | 04 |
| 154 | 44 | 1 | 4.062 (103.2) | 1.156 (29.4) | 1.770 (45.0) | .625 (15.9) | .937 (23.8) | 16 |
| 155 | 44 | 1 | 5.062 (128.6) | 1.156 (29.4) | 1.770 (45.0) | .625 (15.9) | .937 (23.8) | 16 |
| 156 | 40 | 1 | 4.062 (103.2) | 1.156 (29.4) | 1.770 (45.0) | .625 (15.9) | .937 (23.8) | 16 |
| 157 | 40 | 1 | 5.062 (128.6) | 1.156 (29.4) | 1.770 (45.0) | .625 (15.9) | .937 (23.8) | 16 |

Dimensions in inches (millimeters) and are subject to change without notice.

© 2013 Glenair, Inc.
U.S. CAGE Code 06324
Printed in U.S.A.