MAX3160E/MAX3161E/MAX3162E

±15kV ESD-Protected, +3.0V to +5.5V, 10nA, RS-232/RS-485/ RS-422 Multiprotocol Transceivers

General Description

The MAX3160E/MAX3161E/MAX3162E are programmable RS-232/RS-485/RS-422 multiprotocol transceivers. The MAX3160E/MAX3161E are pin programmable as a 2Tx/2Rx RS-232 interface or a single RS-485/RS-422 transceiver. The MAX3162E is configured as a 2Tx/2Rx RS-232 interface, and a single RS-485/RS-422 transceiver simultaneously.

The MAX3160E/MAX3161E/MAX3162E feature enhanced electrostatic discharge (ESD) protection. All of the transmitter outputs and receiver inputs are protected to ±15kV using the Human Body Model.

All devices incorporate a proprietary low-dropout transmitter output stage, and an on-board dual charge pump to allow RS-232- and RS-485-/RS-422-compliant performance from a +3V to +5.5V supply. These devices also feature pin-selectable transmitter slew rates for RS-232 and RS-485/RS-422 modes. Slew-rate limiting minimizes EMI and reduces reflections caused by improperly terminated cables, allowing error-free data transmission up to 250kbps. Disabling slew-rate limiting allows these devices to transmit at data rates up to 10Mbps in RS-485/RS-422 mode and up to 1Mbps in RS-232 mode.

The MAX3160E/MAX3162E offer a flow-through pinout that facilitates board layout. The MAX3160E/MAX3161E/MAX3162E are available in tiny SSOP packages and operate up to -40°C to +85°C temperature ranges.

Benefits and Features

- Flexible Options for RS-232 and RS-422/485 Operation In One Package
  - Simultaneous 2Tx/2Rx RS-232 and Half-Duplex RS-485 Transceiver Operation (MAX3162E)
  - Pin-Programmable As Either 2Tx/2Rx RS-232 or Half/Full RS-485 Transceiver (MAX3160E, MAX3161E)
- Integrated Protection Increases Robustness
  - High ±15kV ESD HBM per JEDEC JS-001-2012
  - Transmitters and Receivers Protected Against Wiring Faults
  - True Fail-Safe Receiver Prevents False Transition on Receiver Input Short or Open
  - Short-Circuit Protection Over the Entire Common-Mode Voltage Range
  - Thermal Protection from Excessive Power Dissipation
  - Slew Rate Limiting Minimizes EM and Reduces Cable Reflections
- Integrated Charge Pump Circuitry Saves Board Space
  - Eliminates the Need for a Bipolar ±12V Supply
  - Enables Single Supply Operation From +3V to +5.5V Voltage Supply
- 1µA Shutdown Supply Current Saves Power
- Allows Up To 256 Transceivers on the Bus

Applications

Point-of-Sales Equipment	Peripherals
Industrial Controls	Networking
RS-232 to RS-485 Interface Converters	Security Systems

Typical Operating Circuit

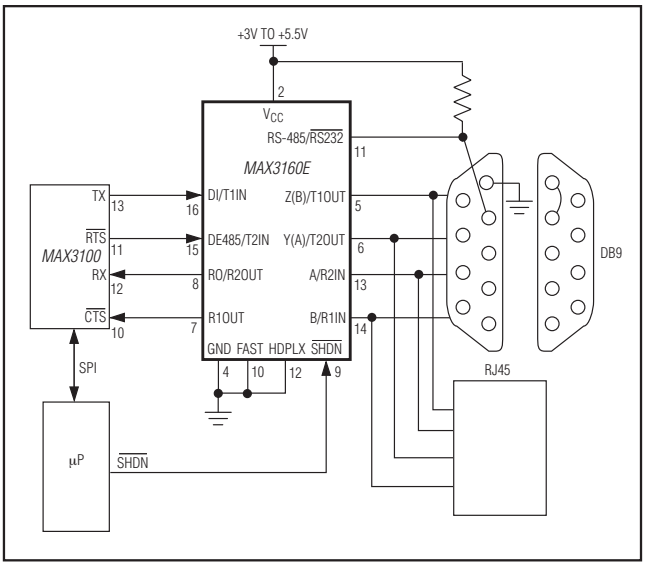

Ordering Information appears at end of data sheet.
Pin Configurations appear at end of data sheet.
Selector Guide appears at end of data sheet.

19-3580; Rev 1; 5/15

maxim integrated™

Absolute Maximum Ratings

V_{CC} to GND. .....-0.3V to +6V
V+ to GND .....-0.3V to +7V
V- to GND. .....-7V to +0.3V
V+ - V- (Note 1). .....+13V
Input Voltages
T1IN, T2IN, DI, DE485, $\overline{RE485}$, TE232, $\overline{RE232}$, $\overline{SHDN}$, FAST, HDPLX, RS485/$\overline{RS232}$ to GND. .....-0.3V to +6V
A, B, R1IN, R2IN to GND .....±25V
Output Voltages
T1OUT, T2OUT, Y, Z to GND (V_{CC} = 0 or $\overline{SHDN}$ = GND) .....±13.2V
T1OUT, T2OUT to GND (V_{CC} = 5.5V and $\overline{SHDN}$ = V_{CC}) .....-13.2V to +9V
R2OUT, R1OUT, RO to GND.....-0.3V to (V_{CC} + 0.3V)
Output Short-Circuit Duration
T1OUT, T2OUT, Y, Z .....Continuous
Continuous Power Dissipation (T_A = +70°C)
20-Pin SSOP (derate 8.0mW/°C above +70°C) 640mW
24-Pin SSOP (derate 8.0mW/°C above +70°C) 640mW
28-Pin SSOP (derate 9.1mW/°C above +70°C) 727mW
Operating Temperature Ranges
MAX316_CA_ .....0°C to +70°C
MAX316_EA_ .....-40°C to +85°C
Storage Temperature Range .....-65°C to +150°C
Junction Temperature .....+150°C
Lead Temperature (soldering, 10s) .....+300°C

Note 1: V+ and V- can have maximum magnitudes of 7V, but their absolute difference cannot exceed 13V.

Stresses beyond those listed under "Absolute Maximum Ratings" may cause permanent damage to the device. These are stress ratings only, and functional operation of the device at these or any other conditions beyond those indicated in the operational sections of the specifications is not implied. Exposure to absolute maximum rating conditions for extended periods may affect device reliability.

Electrical Characteristics (continued)

(V_{CC} = +3V to +5.5V, C1–C4 = 0.1µF when tested at +3.3V ±10%; C1 = 0.047µF and C2, C3, C4 = 0.33µF when tested at +5V±10%; T_A = T_{MIN} to T_{MAX}, unless otherwise noted. Typical values are at V_{CC} = +3.3V and T_A = +25°C.) (Note 2)

PARAMETER	SYMBOL	CONDITIONS	MIN	TYP	MAX	UNITS
DC CHARACTERISTICS						
V_{CC} Standby Current	I_{CC}	MAX3160E/MAX3161E, no load, RS-485/$\overline{RS-232}$ = GND		1.2	2.8	mA
		MAX3160E/MAX3161E, no load, RS-485/$\overline{RS-232}$ = V_{CC}		2.5	5.5	
		MAX3162E, no load		3	6	
V_{CC} Shutdown Current	I_{SHDN}	$\overline{SHDN}$ = GND, receiver inputs open or grounded		0.01	1	µA
TRANSMITTER AND LOGIC INPUTS (DI, T1IN, T2IN, DE485, $\overline{RE485}$, TE232, $\overline{RE232}$, FAST, HDPLX, $\overline{SHDN}$, RS-485/ $\overline{RS-232}$)						
Logic-Input Low	V_{IL}				0.8	V
Logic-Input High	V_{IH}	V_{CC} = +3.3V	2.0			V
		V_{CC} = +5V	2.4			
Logic-Input Leakage Current	I_{INL}			±0.01	±1	µA
Transmitter Logic Hysteresis	V_{HYS}			0.5		V
RS-232 AND RS-485/RS-422 RECEIVER OUTPUTS (R1OUT, R2OUT, RO)						
Receiver Output-Voltage Low	V_{OL}	I_{OUT} = 2.5mA			0.4	V
Receiver Output-Voltage High	V_{OH}	I_{OUT} = -1.5mA	V_{CC} - 0.6			V
Receiver Output Short-Circuit Current	I_{OSR}	$0 \le V_O \le V_{CC}$		±20	±85	mA
Receiver Output Leakage Current	I_{OZR}	Receivers disabled		±0.05	±1	µA

Electrical Characteristics (continued)

(V_{CC} = +3V to +5.5V, C1–C4 = 0.1µF when tested at +3.3V ±10%; C1 = 0.047µF and C2, C3, C4 = 0.33µF when tested at +5V±10%; T_A = T_{MIN} to T_{MAX}, unless otherwise noted. Typical values are at V_{CC} = +3.3V and T_A = +25°C.) (Note 2)

PARAMETER	SYMBOL	CONDITIONS		MIN	TYP	MAX	UNITS
RS-232 RECEIVER INPUTS (R1IN, R2IN)							
Input Voltage Range				-25		+25	V
Logic-Input Low						0.8	
Logic-input High		V_{CC} = +3.3V		2.0			V
		V_{CC} = +5V		2.4			
Input Hysteresis					0.5		V
Input Resistance		V_{CC} = +3.0V to 5.5V		3	5	7	kΩ
		V_{CC} = 0		6	11	16	
RS-485/RS-422 RECEIVER INPUTS (Note 3)							
Input Resistance	R_{IN}	-7V < V_{CM} < +12V	MAX3160E	48			kΩ
			MAX3161E/ MAX3162E	96			
Input Current	I_{IN}	MAX3160E	V_{CM} = +12V			0.25	mA
			V_{CM} = -7V			-0.15	
		MAX3161E/MAX3162E	V_{CM} = +12V			0.125	
			V_{CM} = -7V			-0.075	
Input Differential Threshold	V_{TH}	-7V ≤ V_{CM} ≤ +12V		-200		-50	mV
Input Hysteresis	ΔV_{TH}				30		mV
RS-232 TRANSMITTER OUTPUTS (T1OUT, T2OUT)							
Output Voltage Swing		Both transmitter outputs loaded with 3kΩ to GND		±5	±5.4		V
Output Resistance		V_{CC} = V+ = V- = 0, T_OUT = ±2V		300	10M		Ω
Output Short-Circuit Current	I_{SC}	T_OUT = GND			±30	±60	mA
Output Leakage Current	I_O	V_{OUT} = ±9V TE232 = GND or $\overline{SHDN}$ = GND	MAX3160E			±125	µA
			MAX3161E			±25	
			MAX3162E			±25	
RS-485/RS-422 TRANSMITTER OUTPUTS (Y, Z)							
Differential Output Voltage	V_{OD}	Figure 1	R = 27Ω (RS-485)	1.5			V
			R = 50Ω (RS-422)	2			
Change in Magnitude of Differential Output Voltage for Complementary Output States	$\lvert\Delta V_{OD}\rvert$	R = 27Ω or 50Ω, Figure 1				0.2	V
Common-Mode Output Voltage	V_{OC}	R = 27Ω or 50Ω, Figure 1				3	V
Change in Magnitude of Common-Mode Output Voltage for Complementary Output States	$\lvert\Delta V_{OC}\rvert$	R = 27Ω or 50Ω, Figure 1				0.2	V

Electrical Characteristics (continued)

(V_{CC} = +3V to +5.5V, C1–C4 = 0.1µF when tested at +3.3V ±10%; C1 = 0.047µF and C2, C3, C4 = 0.33µF when tested at +5V±10%; T_A = T_{MIN} to T_{MAX}, unless otherwise noted. Typical values are at V_{CC} = +3.3V and T_A = +25°C.) (Note 2)

PARAMETER	SYMBOL	CONDITIONS		MIN	TYP	MAX	UNITS
Output Short-Circuit Current	I_{SC}	V_Y or V_Z = -7V to +12V				±250	mA
Output Leakage Current	I_O	V_Y or V_Z = -7V or +12V, DE485 = GND or $\overline{SHDN}$ = GND	MAX3160E			±125	µA
			MAX3161E			±25	
			MAX3162E			±25	
RS-232 TRANSMITTER TIMING CHARACTERISTICS (SLOW MODE, FAST = GND, 250kbps, one transmitter switching)							
Maximum Data Rate		R_L = 3kΩ, C_L = 1000pF		250			kbps
Transmitter Skew	t_{TSKEW}	R_L = 3kΩ, C_L = 150pF, Figure 6			25		ns
Transition-Region Slew Rate		V_{CC} = +3.3V, T_A = +25°C, R_L = 3kΩ to 7kΩ, measured from +3.0V to -3.0V or -3.0V to +3.0V	C_L = 150pF to 1000pF	6		30	V/µs
			C_L = 150pF to 2500pF	4		30	
RS-232 TRANSMITTER TIMING CHARACTERISTICS (FAST MODE, FAST = V_{CC}, 1Mbps, one transmitter switching)							
Maximum Data Rate		V_{CC} = +3V to +4.5V, R_L = 3kΩ, C_L = 250pF		1			Mbps
		V_{CC} = +4.5V to +5.5V, R_L = 3kΩ, C_L = 1000pF		1			
Transmitter Skew	t_{TSKEW}	R_L = 3kΩ, C_L = 150pF, Figure 6			10		ns
Transition-Region Slew Rate		V_{CC} = +3.3V, T_A = +25°C, R_L = 3kΩ to 7kΩ, C_L = 150pF to 1000pF, measured from +3.0V to -3.0V or -3.0V to +3.0V	MAX3160E	13		150	V/µs
			MAX3161E MAX3162E	24		150	
RS-232 RECEIVER TIMING CHARACTERISTICS							
Receiver Propagation Delay	t_{PHL},t_{PLH}	R_IN to R_OUT, C_L = 15pF, Figure 5			0.15		µs
Receiver Output Enable Time	t_{RZL},t_{RZH}	C_L = 50pF, Figures 2, 10, MAX3162E			200		ns
Receiver Output Disable Time	t_{RLZ},t_{RHZ}	C_L = 15pF, Figures 2, 10, MAX3162E			200		ns
Receiver Skew	t_{RSKEW}	C_L = 50pF, Figure 5			100		ns
RS-485/RS-422 DRIVER TIMING CHARACTERISTICS (SLOW MODE, FAST = GND, 250kbps)							
Differential Driver Propagation Delay	t_{DPHL}, t_{DPLH}	R_{DIFF} = 54Ω, C_L = 50pF, Figures 3, 7		200	400	800	ns
Differential Driver Rise and Fall Time	t_{DR}, t_{DF}	R_{DIFF} = 54Ω, C_L = 50pF, Figures 3, 7		200	400	800	ns
Differential Driver Propagation Delay Skew	t_{DSKEW}	R_{DIFF} = 54Ω, C_L = 50pF, Figures 3, 7				200	ns
Driver Output Enable Time	t_{DZH}, t_{DZL}	C_L = 50pF, Figures 4, 8			400	900	ns
Driver Output Disable Time	t_{DLZ}, t_{DHZ}	C_L = 50pF, Figures 4, 8			200	400	ns

Electrical Characteristics (continued)

(V_{CC} = +3V to +5.5V, C1–C4 = 0.1µF when tested at +3.3V ±10%; C1 = 0.047µF and C2, C3, C4 = 0.33µF when tested at +5V±10%; T_A = T_{MIN} to T_{MAX}, unless otherwise noted. Typical values are at V_{CC} = +3.3V and T_A = +25°C.) (Note 2)

PARAMETER	SYMBOL	CONDITIONS	MIN	TYP	MAX	UNITS
RS-485/RS-422 DRIVER TIMING CHARACTERISTICS FAST MODE, FAST = V_{CC}, 10Mbps)						
Differential Driver Propagation Delay	t_{DPHL}, t_{DPLH}	R_{DIFF} = 54Ω, C_L = 50pF, Figures 3, 7		60	120	ns
Differential Driver Rise and Fall Times	t_{DR}, t_{DF}	R_{DIFF} = 54Ω, C_L = 50pF, Figures 3, 7		10	25	ns
Differential Driver Propagation Delay Skew	t_{DSKEW}	R_{DIFF} = 54Ω, C_L = 50pF, Figures 3, 7			10	ns
Driver Output Enable Time	t_{DZH},t_{DZL}	C_L = 50pF, Figures 4, 8		400	900	ns
Driver Output Disable Time	t_{DHZ},t_{DLZ}	C_L = 50pF, Figures 4, 8		200	400	ns
RS-485/RS-422 RECEIVER TIMING CHARACTERISTICS						
Receiver Propagation Delay	t_{RPLH}, t_{RPHL}	C_L = 15pF, Figures 9, 11		80	150	ns
Receiver Propagation Delay Skew	t_{RSKEW}	C_L = 15pF, Figures 9, 11		1	10	ns
Receiver Output Enable Time	t_{RZL}, t_{RZH}	MAX3162E, C_L = 50pF, Figures 2, 10		100		ns
Receiver Output Disable Time	t_{RLZ}, t_{RHZ}	MAX3162E, C_L = 15pF, Figures 2, 10		100		ns
ESD PROTECTION						
R_IN, T_OUT, A, B, Y, Z		Human Body Model	±15			kV

Note 2: All currents into the device are positive. All currents out of the device are negative.

Note 3: Applies to A, B for MAX3162E and MAX3160E/MAX3161E with HDPLX = GND, or Y, Z for MAX3160E/MAX3161E with HDPLX = V_{CC}.

Typical Operating Characteristics

(V_{CC} = +3.3V, 250kbps data rate, C_{BYPASS}, C1, C2, C3, C4 = 0.1µF, all RS-232 transmitters (RS-232 mode) loaded with 3kΩ to ground, T_A = +25°C, unless otherwise noted.)

RS-232 TRANSMITTER OUTPUT VOLTAGE vs. LOAD CAPACITANCE (FAST = GND)

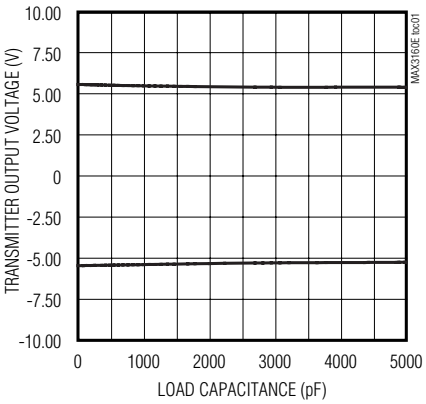

RS-232 TRANSMITTER OUTPUT VOLTAGE vs. LOAD CAPACITANCE (FAST = V_{CC})

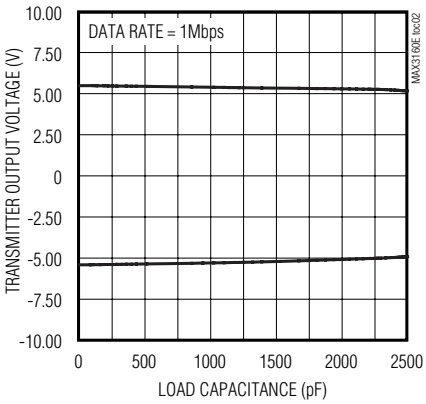

RS-232 TRANSMITTER SLEW RATE vs. LOAD CAPACITANCE (FAST = GND)

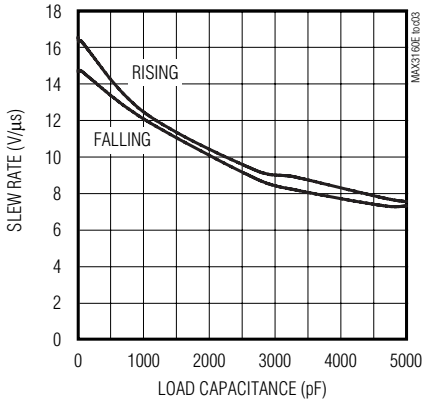

Typical Operating Characteristics (continued)

(V_{CC} = +3.3V, 250kbps data rate, C_{BYPASS}, C1, C2, C3, C4 = 0.1µF, all RS-232 transmitters (RS-232 mode) loaded with 3kΩ to ground, T_A = +25°C, unless otherwise noted.)

RS-232 TRANSMITTER SLEW RATE vs. LOAD CAPACITANCE (FAST = V_{CC})

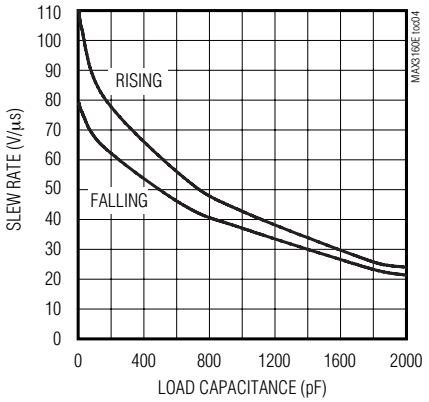

OPERATING SUPPLY CURRENT vs. LOAD CAPACITANCE WHEN TRANSMITTING DATA (RS-232 MODE)

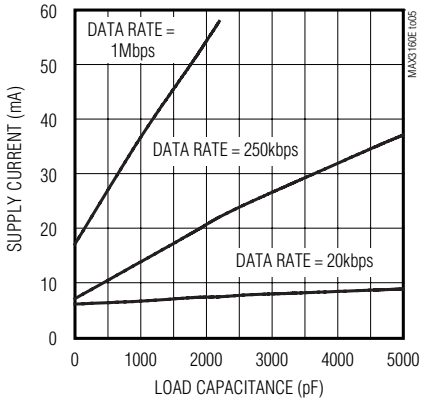

MAX3160E/MAX3161E NO-LOAD SUPPLY CURRENT vs. TEMPERATURE

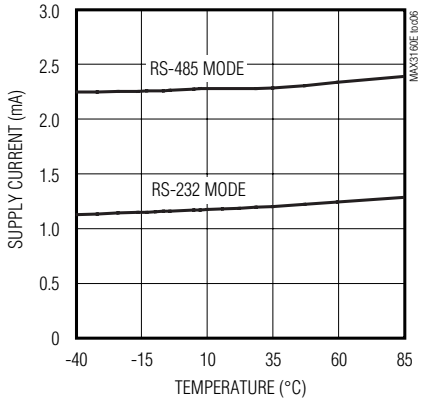

SHUTDOWN CURRENT vs. TEMPERATURE

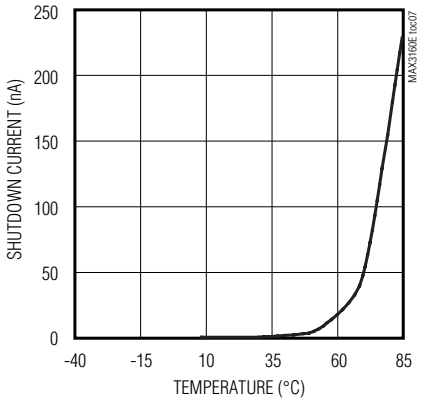

RS-485/RS-422 OUTPUT CURRENT vs. DRIVER-OUTPUT LOW VOLTAGE

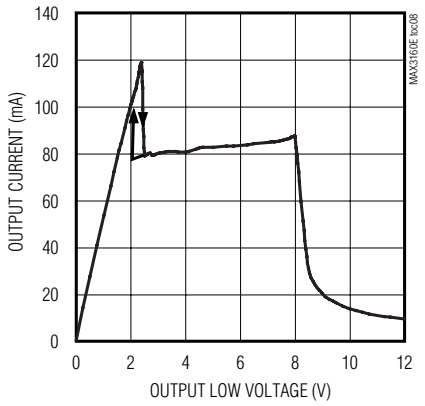

RS-485/RS-422 OUTPUT CURRENT vs. DRIVER-OUTPUT LOW VOLTAGE

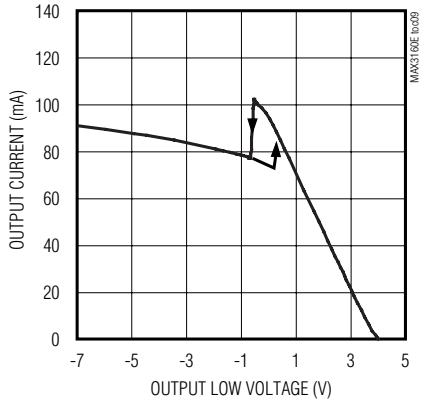

RS-485/RS-422 DRIVER OUTPUT CURRENT vs. DIFFERENTIAL OUTPUT VOLTAGE

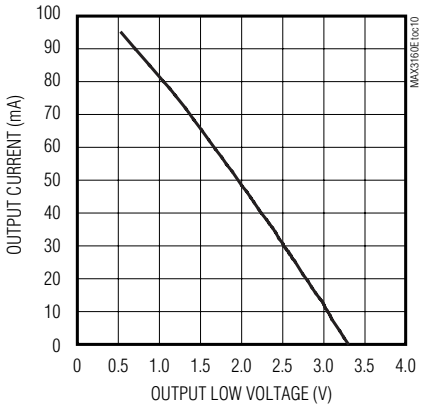

RS-485/RS-422 DRIVER DIFFERENTIAL OUTPUT vs. TEMPERATURE

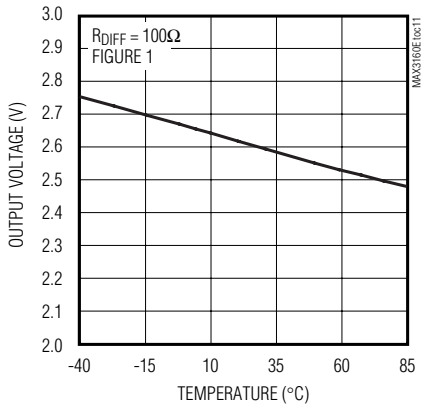

RECEIVER OUTPUT CURRENT vs. RECEIVER-OUTPUT LOW VOLTAGE

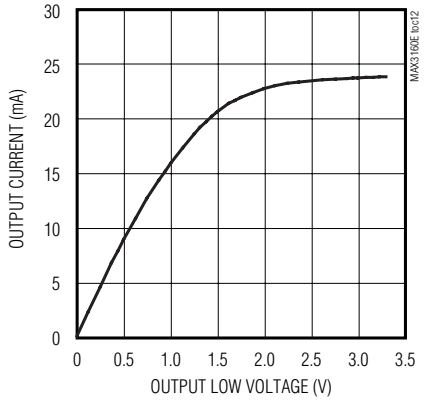

Typical Operating Characteristics (continued)

(V_{CC} = +3.3V, 250kbps data rate, C_{BYPASS}, C1, C2, C3, C4 = 0.1µF, all RS-232 transmitters (RS-232 mode) loaded with 3kΩ to ground, T_A = +25°C, unless otherwise noted.)

RECEIVER OUTPUT CURRENT vs. RECEIVER-OUTPUT HIGH VOLTAGE

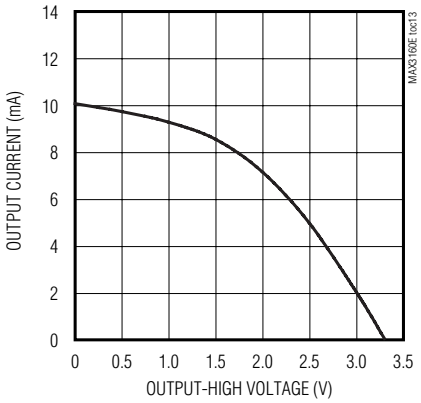

RS-485/RS-422 RECEIVER PROPAGATION DELAY vs. TEMPERATURE

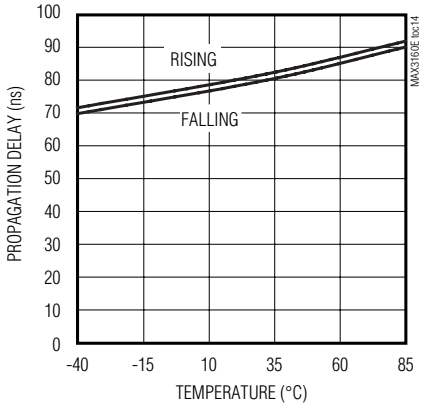

RS-485/RS-422 DRIVER PROPAGATION DELAY vs. TEMPERATURE (FAST = V_{CC})

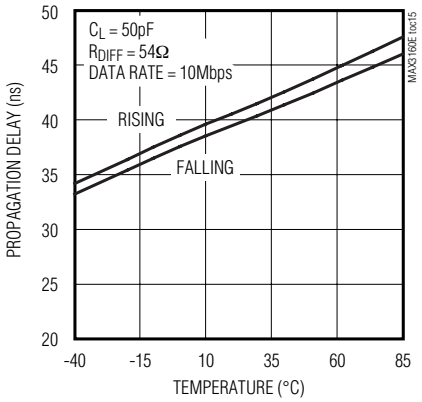

RS-485/RS-422 DRIVER PROPAGATION DELAY vs. TEMPERATURE (FAST = GND)

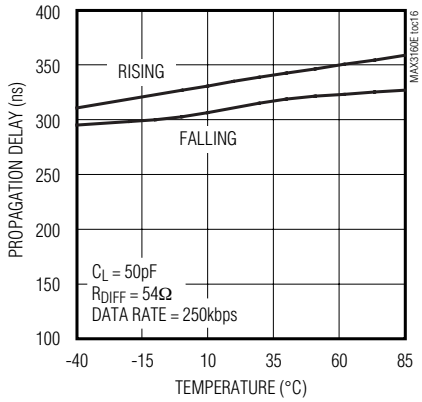

RS-485/RS-422 DRIVER PROPAGATION (FAST = V_{CC}, 10Mbps)

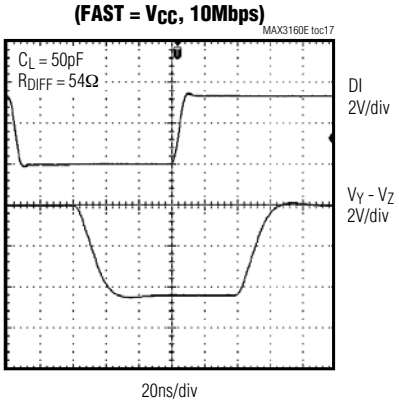

RS-485/RS-422 DRIVER PROPAGATION (FAST = GND, 250kbps)

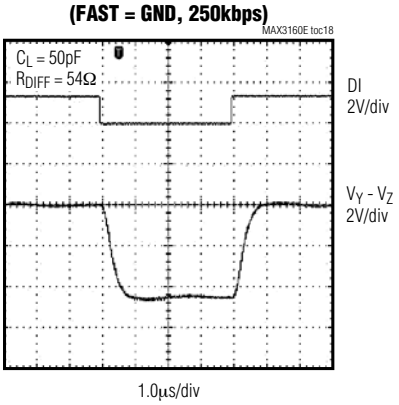

I-V OUTPUT IMPEDANCE CURVE IN RS-232 SHUTDOWN MODE

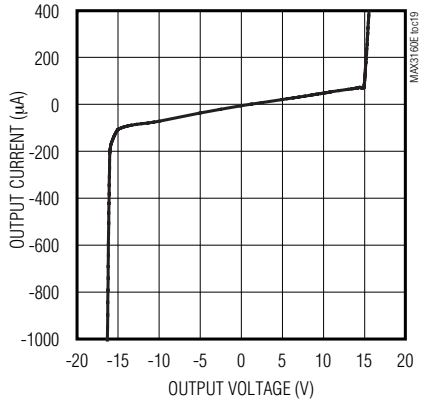

RS-485/RS-422 RECEIVER PROPAGATION (FAST = V_{CC}, 5Mbps)

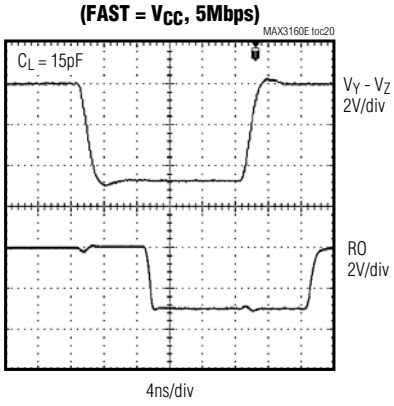

RS-485/RS-422 RECEIVER PROPAGATION (FAST = V_{CC}, 5Mbps)

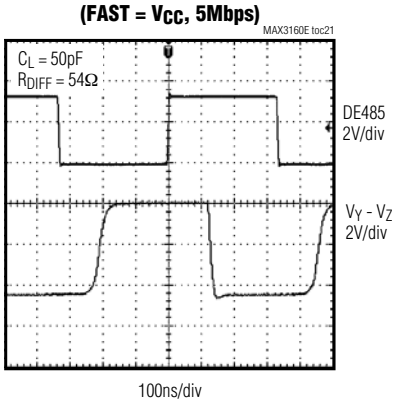

Typical Operating Characteristics (continued)

(V_{CC} = +3.3V, 250kbps data rate, C_{BYPASS}, C1, C2, C3, C4 = 0.1µF, all RS-232 transmitters (RS-232 mode) loaded with 3kΩ to ground, T_A = +25°C, unless otherwise noted.)

MAX3160E
RS-232 TRANSMITTER PROPAGATION
(FAST = GND, 250kbps)

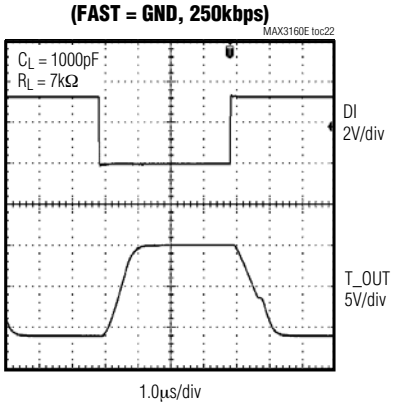

MAX3160E
RS-232 TRANSMITTER PROPAGATION
(FAST = V_{CC}, 250kbps)

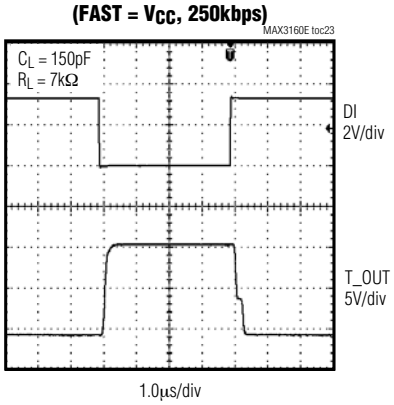

MAX3161E/MAX3162E
RS-232 TRANSMITTER PROPAGATION
(FAST = GND, 250kbps)

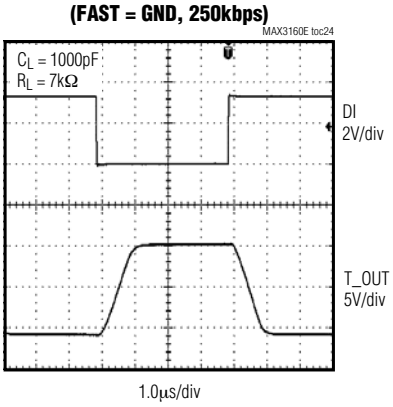

MAX3161E/MAX3162E
RS-232 TRANSMITTER PROPAGATION
(FAST = V_{CC}, 250kbps)

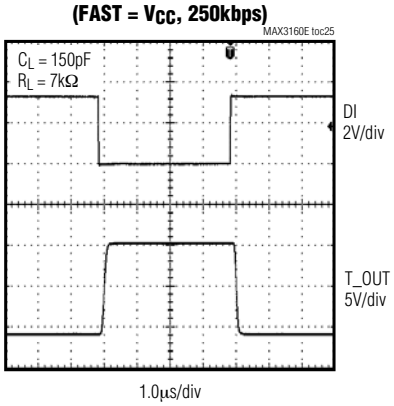

TRANSMITTER OUTPUT VOLTAGE
vs. SUPPLY VOLTAGE (FAST = GND)

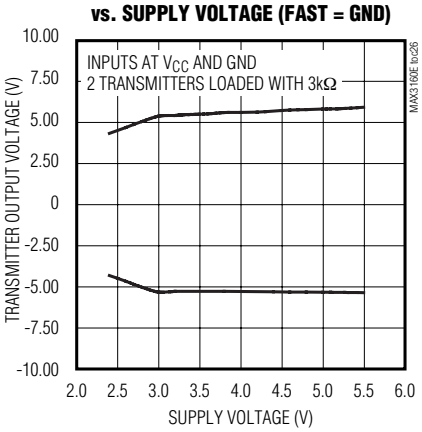

SUPPLY CURRENT vs. SUPPLY VOLTAGE
WITH RS-232 RUNNING (FAST = GND)

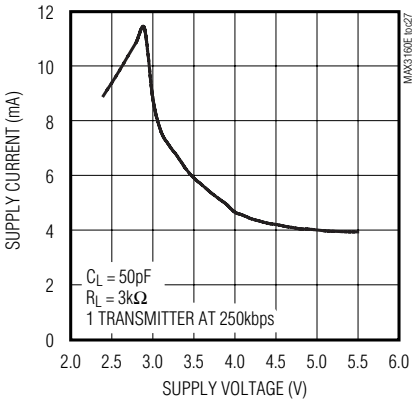

Pin Description

PIN			NAME	FUNCTION
MAX3160E	MAX3161E	MAX3162E		
1	1	1	C1+	Positive Terminal of the Positive Flying Capacitor
2	2	2	V_{CC}	Positive Supply Voltage
3	3	3	C1-	Negative Terminal of the Positive Flying Capacitor
4	4	4	GND	Ground
—	5	5	T1OUT	RS-232 Driver Output
5	—	—	Z(B)/T1OUT	Inverting RS-485/RS-422 Driver Output in Full-Duplex Mode (and Inverting RS-485/RS-422 Receiver Input in Half-Duplex Mode)/RS-232 Driver Output
—	—	6	Z	Inverting RS-485/RS-422 Driver Output
—	6	—	Z(B)	Inverting RS-485/RS-422 Driver Output in Full-Duplex Mode (and Inverting RS-485/RS-422 Receiver Input in Half-Duplex Mode)
6	—	—	Y(A)/T2OUT	Noninverting RS-485/RS-422 Driver Output in Full-Duplex Mode (and Noninverting RS-485/RS-422 Receiver Input in Half-Duplex Mode)/RS-232 Driver Output
—	—	7	Y	Noninverting RS-485/RS-422 Driver Output
—	7	—	Y(A)	Noninverting RS-485/RS-422 Driver Output in Full-Duplex Mode (and Noninverting RS-485/RS-422 Receiver Input in Half-Duplex Mode)
7	9	9	R1OUT	RS-232 Receiver Output
—	8	8	T2OUT	RS-232 Driver Output
8	10	—	RO/R2OUT	RS-485/RS-422 Receiver Output/RS-232 Receiver Output
9	11	13	$\overline{SHDN}$	Active-Low Shutdown-Control Input. Drive $\overline{SHDN}$ low to shut down transmitters and charge pump.
—	—	10	R2OUT	RS-232 Driver Output
10	12	14	FAST	Transmitter Speed-Select Input. Select slew-rate limiting for RS-232 and RS-485/RS-422. Slew-rate limits with a logic-level low.
—	—	11	RO	RS-485/RS-422 Receiver Output
11	13	—	RS-485/$\overline{RS\text{-}232}$	Pin-Selectable Mode Functionality Input. Operates as RS-485/RS-422 with a logic-level high; operates as RS-232 with a logic-level low.
—	—	12	$\overline{RE485}$	RS-485/RS-422 Receiver Enable Input. Logic-level low enables RS-485/RS-422 receivers.
12	14	—	HDPLX	Pin-Selectable Mode Functionality Input. Operates in full-duplex mode when low; operates in half-duplex mode when high.

Pin Description (continued)

PIN			NAME	FUNCTION
MAX3160E	MAX3161E	MAX3162E		
13	—	—	A/R2IN	Noninverting RS-485/RS-422 Receiver Input/RS-232 Receiver Input
14	—	—	B/R1IN	Inverting RS-485/RS-422 Receiver Input/RS-232 Receiver Input
—	—	15	$\overline{RE232}$	RS-232 Receiver Enable. Logic-level low enables RS-232 receivers.
—	15	17	A	Noninverting RS-485/RS-422 Receiver Input
15	19	—	DE485/T2IN	RS-485/RS-422 Driver Enable/RS-232 Driver Input
—	—	16	TE232	RS-232 Transmitter Output Enable
—	16	18	B	Inverting RS-485/RS-422 Receiver Input
16	20	—	DI/T1IN	RS-485/RS-422 Driver Input/RS-232 Driver Input
—	17	19	R2IN	RS-232 Receiver Input
17	21	25	V-	Negative Charge-Pump Rail
—	18	20	R1IN	RS-232 Receiver Input
18	22	26	C2-	Negative Terminal of the Negative Flying Capacitor
19	23	27	C2+	Positive Terminal of the Negative Flying Capacitor
20	24	28	V+	Positive Charge-Pump Rail
—	—	21	T2IN	RS-232 Driver Input
—	—	22	DE485	RS-485/RS-422 Driver Enable Input
—	—	23	DI	RS-485/RS-422 Driver Input
—	—	24	T1IN	RS-232 Driver Input

MAX3160E Functional Diagram

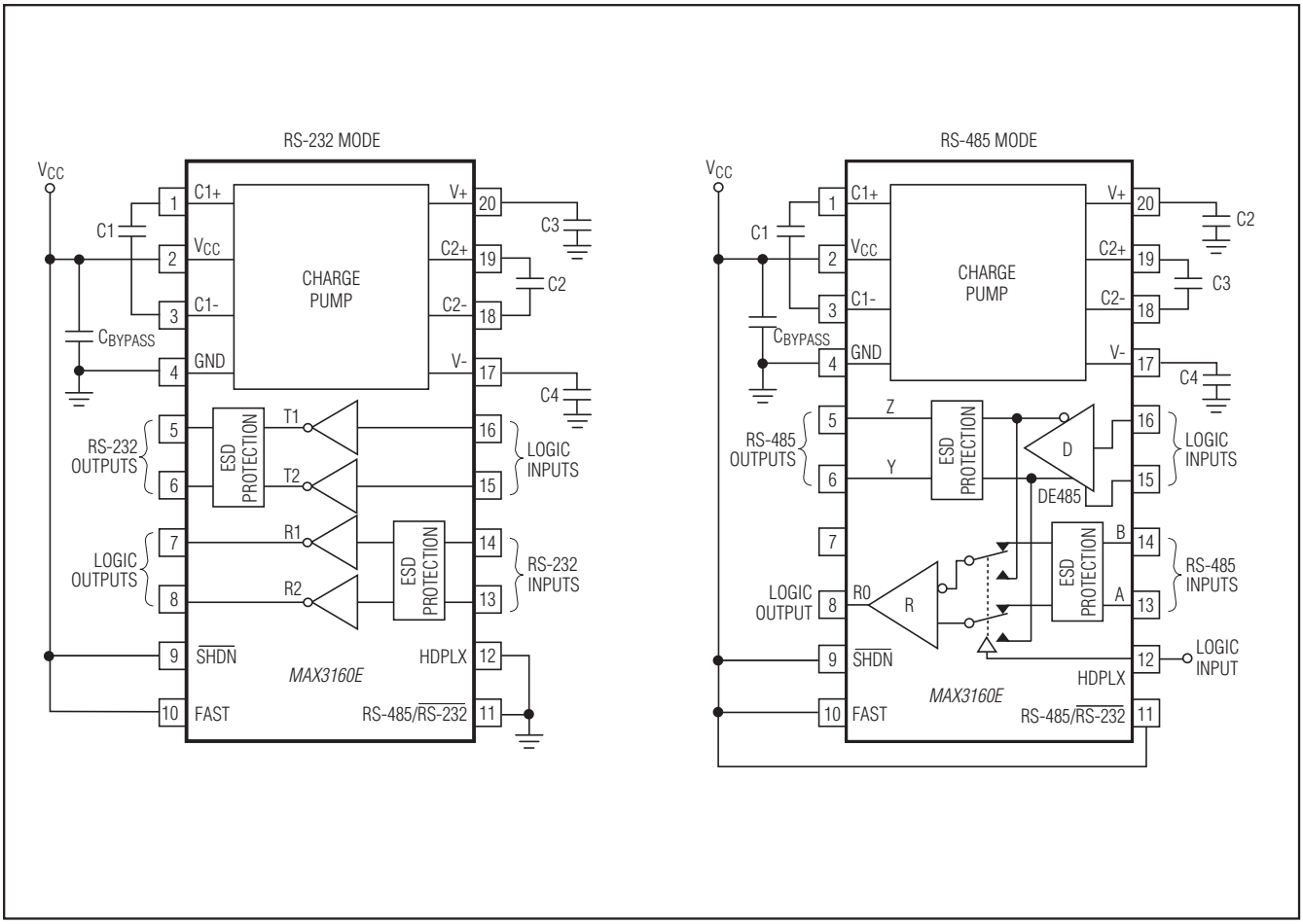

MAX3161E Functional Diagram

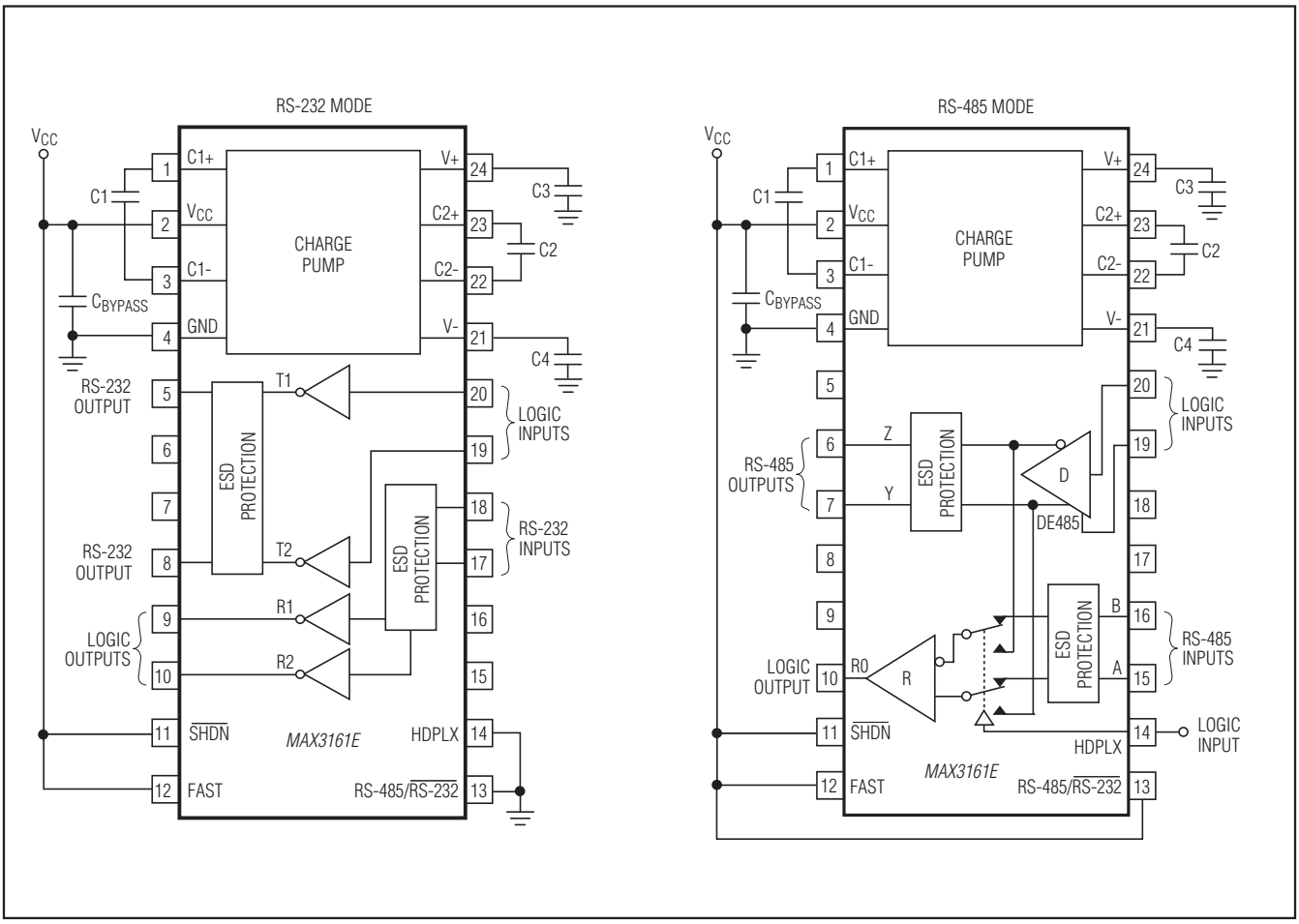

MAX3162E Functional Diagram

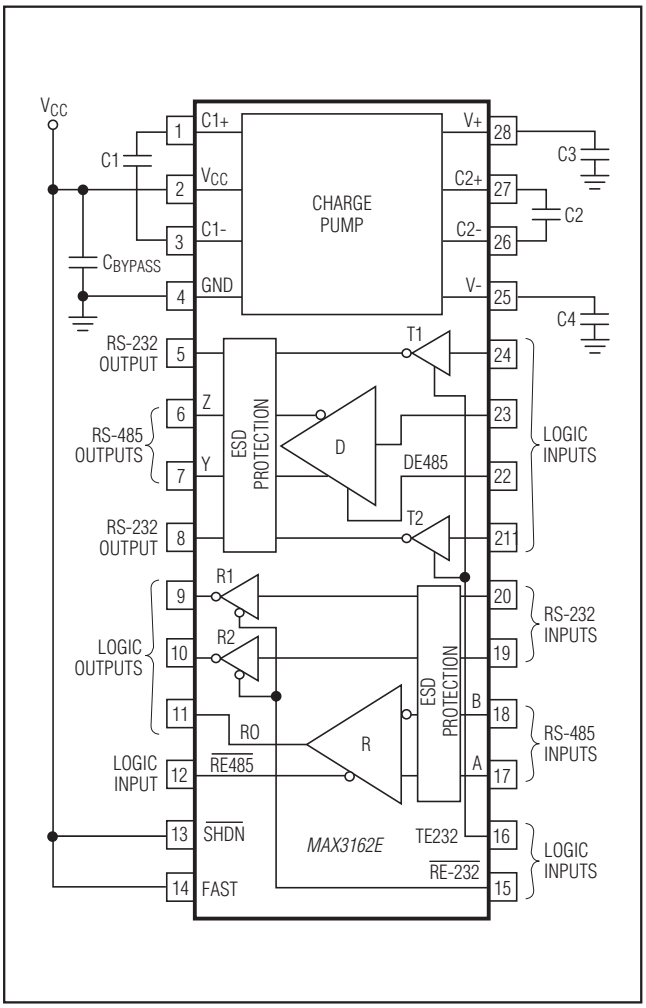

Test Circuits

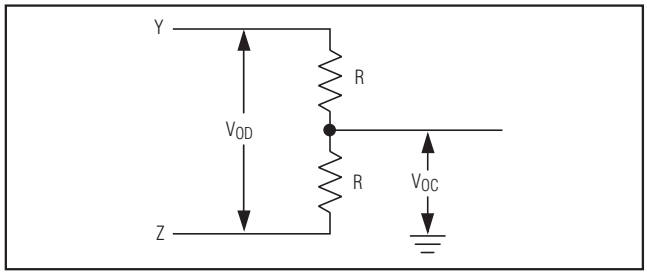

Figure 1. RS-485/RS-422 Driver DC Test Load

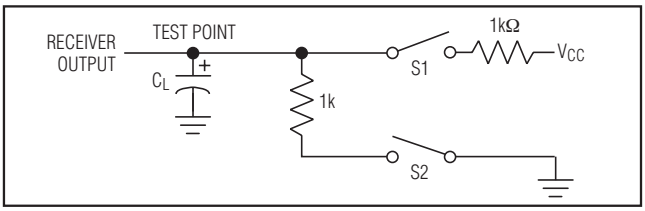

Figure 2. RS-485/RS-422 and RS-232 Receiver Enable/Disable Timing Test Load

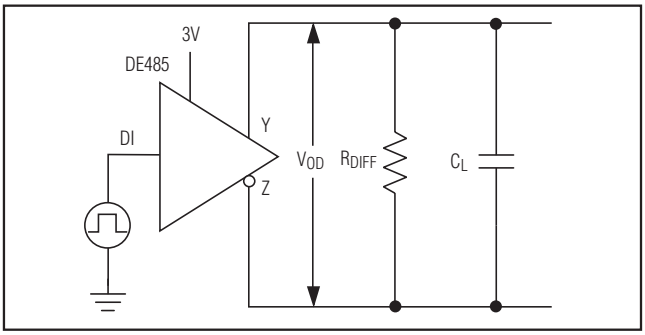

Figure 3. RS-485/RS-422 Driver Timing Test Circuit

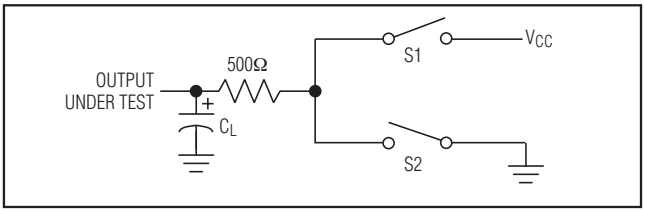

Figure 4. RS-485/RS-422 Driver Enable/Disable Timing Test Load

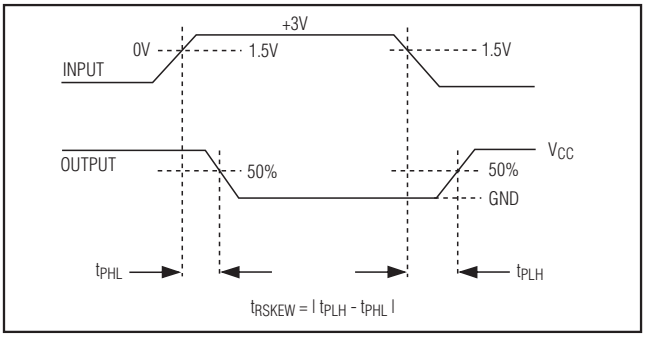

Figure 5. RS-232 Receiver Propagation-Delay Timing

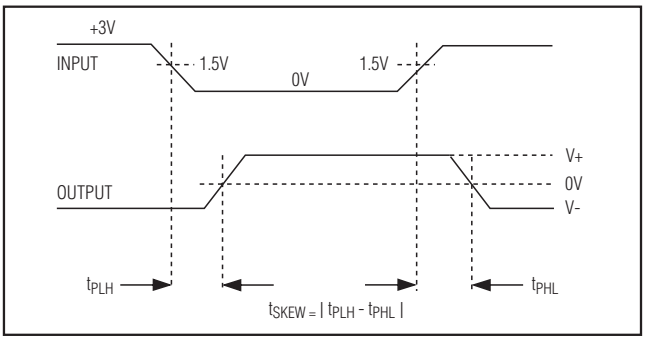

Figure 6. RS-232 Transmitter Propagation-delay Timing

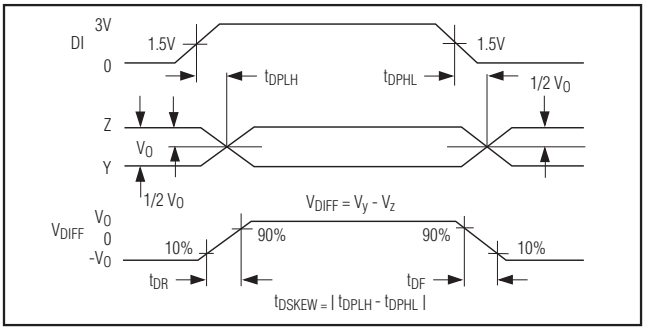

Figure 7. RS-485/RS-422 Driver Propagation Delays

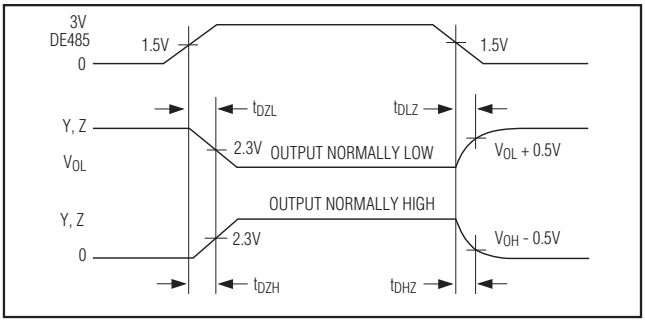

Figure 8. RS-485/RS-422 Driver Enable and Disable Times

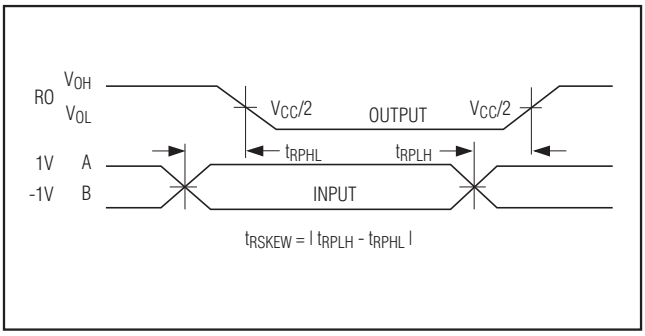

Figure 9. RS-485/RS-422 Receiver Propagation Delays

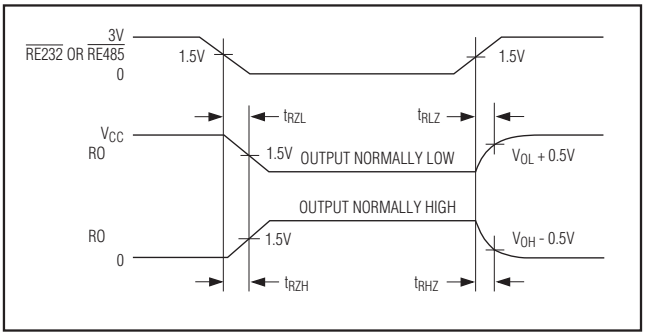

Figure 10. MAX3162 RS-485/RS-422 and RS-232 Receiver Enable and Disable Times

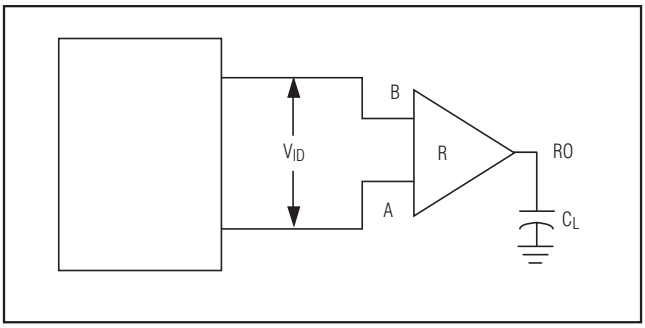

Figure 11. RS-485/RS-422 Receiver Propagation Delays Test Circuit

Detailed Description

The MAX3160E/MAX3161E/MAX3162E +3V to +5.5V, multiprotocol transceivers can be pin-configured in a number of RS-232 and RS-485/RE-422 interface combinations. These circuit configurations are ideal for the design of RS-232 to RS-485 converters, multiprotocol buses, or any application that requires both RS-232 and RS-485 transceivers. The slew rate of these devices is on-the-fly pin selectable, allowing reduced EMI data rates, or up to 10Mbps RS-485 communications. Power consumption can be reduced to 10nA by using the shutdown function, but the RS-232 receivers remain active allowing other devices to query the interface controller. A flow-through pinout and the space-saving SSOP packages (available in commercial and extended temperature ranges) facilitate board layout.

Device Selection

The MAX3160E/MAX3161E/MAX3162E contain RS-232 transceivers and an RS-485/RS-422 transceiver. The primary difference between the devices is the multiplexing of the I/O ports.

The MAX3160E has common transmitter outputs and receiver inputs for its RS-232 and RS-485/RS-422 transceivers, and common digital I/O ports. The MAX3160E is optimized for multiprotocol operation on a single interface bus and comes in a 20-pin SSOP package.

The MAX3161E has separate transmitter outputs and receiver inputs for its RS-232 and RS-485/RS-422 transceivers, and common digital I/O ports. The MAX3161E is optimized for multiplexing a single UART across two interface buses and is available in a 24-pin SSOP package.

The MAX3162E has separate transmitter outputs and receiver inputs for its RS-232 and RS-485/RS-422 transceivers, and separate digital I/O ports. The MAX3162E is optimized for protocol translation between two interface buses and comes in a 28-pin SSOP package.

See Tables 1–12, the *Functional Diagrams*, and the following descriptions for details on each device.

MAX3160E

The MAX3160E is a $2T_X/2R_X$ RS-232 transceiver in RS-232 mode, capable of RS-232-compliant communication. Assertion of RS-485/$\overline{\text{RS-232}}$ converts the device to a single RS-485 transceiver by multiplexing the RS-232 I/O ports to an RS-485 driver and receiver pair. The logic inputs now control the driver input and the driver enable. One logic output carries the RS-485 receiver output, and the other is tri-stated. The receiver input impedance is dependent on the device mode and is 1/4-unit load for RS-485 operation and 5kΩ for RS-232 operation.

MAX3161E

The MAX3161E is a $2T_X/2R_X$ RS-232 transceiver in RS-232 mode or a single RS-485/RS-422 transceiver in RS-485 mode. When in RS-485 mode, the unused RS-232 transmitter and receiver outputs are disabled. When in RS-232 mode, the RS-485 transmitter outputs are disabled and the RS-232 receiver inputs are 5kΩ to GND. The RS-485 receiver inputs are always 1/8-unit load. Logic lines are shared between the two protocols and are used for signal inputs and as an RS-485 driver enable.

MAX3162E

The MAX3162E is a 2Tx/2Rx RS-232 transceiver and a single RS-485/RS-422 transceiver simultaneously. All drivers, receivers, and transmitters can be enabled or disabled by pin selection. All outputs are high-impedance when not activated. RS-232 receiver inputs are 5kΩ when enabled, and RS-485 receiver inputs are 1/8-unit load.

Fast-Mode Operation

The FAST control input is used to select the slew-rate limiting of the RS-232 transmitters and the RS-485/RS-422 drivers. With FAST unasserted, the RS-232 transmitters and the RS-485/RS-422 driver are slew-rate limited to reduce EMI. RS-232 data rates up to 1Mbps and RS-485/RS-422 data rates up to 10Mbps are possible when FAST is asserted. FAST can be changed during operation without interrupting data communications.

Half-Duplex RS-485/RS-422 Operation

Asserting HDPLX places the MAX3160E/MAX3161E in half-duplex mode. The RS-485 receiver inputs are internally connected to the driver outputs. To receive RS-485 data, disable the RS-485 outputs by driving DE485 low. HDPLX has no affect on RS-232 operation.

Low-Power Shutdown

The MAX3160E/MAX3161E/MAX3162E have an active-low shutdown control input, $\overline{\text{SHDN}}$. When $\overline{\text{SHDN}}$ is driven low, the charge pump and transmitters are shut down and supply current is reduced to 10nA. The RS-232 receiver outputs remain active if in RS-232 mode. The charge-pump capacitors must be recharged when coming out of shutdown before resuming operation in either RS-232 or RS-485/RS-422 mode (Figure 12).

Dual Charge-Pump Voltage Converter

The MAX3160E/MAX3161E/MAX3162E's internal power supply consists of a regulated dual charge pump that provides output voltages of +5.5V (doubling charge pump), and -5.5V (inverting charge pump), for input voltages (V_{CC}) over the +3.0V to +5.5V range. The charge pumps operate in a discontinuous mode. If the

magnitude of either output voltage is less than +5.5V, the charge pumps are enabled. If the magnitude of both output voltages exceeds +5.5V, the charge pumps are disabled. Each charge pump requires a flying capacitor (C1, C2) and a reservoir capacitor (C3, C4) to generate the V+ and V- supplies (see the *Functional Diagrams).*

RS-485/RS-422 Transceivers

The MAX3160E/MAX3161E/MAX3162E RS-485/RS-422 transceivers feature fail-safe circuitry that guarantees a logic-high receiver output when the receiver inputs are open or shorted, or when they are connected to a terminated transmission line with all drivers disabled (see the *Fail-Safe* Section). The MAX3160E/MAX3161E/ MAX3162E also feature pin-selectable reduced slew-rate drivers that minimize EMI and reduce reflections caused by improperly terminated cables, allowing error-free data transmission up to 250kbps The transmitters can operate at speeds up to 10Mbps with the slew-rate limiting disabled. Drivers are short-circuit current limited and thermally limited to protect them against excessive power dissipation. Half-duplex communication is enabled by driving HDPLX high (MAX3160E/MAX3161E.)

Fail-Safe

The MAX3160E/MAX3161E/MAX3162E guarantee a logic-high RS-485 receiver output when the receiver inputs are shorted or open, or when they are connected to a terminated transmission line with all drivers disabled. This is done by having the receiver threshold between -50mV and -200mV. If the differential receiver input voltage (A-B) is greater than or equal to -50mV, RO is logic-high. If A-B is less than or equal to -200mV, RO is logic-low. In the case of a terminated bus with all transmitters disabled, the receiver's differential input voltage is pulled to 0 by the termination. This results in a logic-high with a 50mV minimum noise margin.

RS-232 Transceivers

The MAX3160E/MAX3161E/MAX3162E RS-232 transmitters are inverting-level translators that convert CMOS-logic levels to ±5V EIA/TIA-232-compliant levels. The transmitters are guaranteed at a 250kbps data rate in slew-rate limited mode (FAST = GND) with worst-case loads of 3kΩ in parallel with 1000pF. Data rates up to 1Mbps can be achieved by asserting FAST. When powered down or in shutdown, the MAX3160E/ MAX3161E/MAX3162E outputs are high impedance and can be driven to ±13.2V. The transmitter inputs do not have pullup resistors. Connect unused inputs to ground or V_{CC}.

The receivers convert RS-232 signals to CMOS-logic output levels. All receivers have inverting outputs that remain active in shutdown. The MAX3160E/MAX3161E/ MAX3162E permit their receiver inputs to be driven to ±25V. Floating receiver input signals are pulled to ground through internal 5kΩ resistors, forcing the outputs to a logic-high. The MAX3162E has transmitter and receiver enable pins that allow its outputs to be tri-stated.

±15kV ESD Protection

As with all Maxim devices, ESD-protection structures are incorporated on all pins to protect against ESD encountered during handling and assembly. The MAX3160E /MAX3161E/MAX3162E receiver inputs and transmitter outputs have extra protection against static electricity found in normal operation. Maxim's engineers developed state-of-the-art structures to protect these pins against ±15kV ESD, without damage. After an ESD event, the MAX3160E/MAX3161E/MAX3162E continue working without latchup.

The receiver inputs and transmitter outputs are characterized for ±15kV ESD protection using the Human Body Model

ESD Test Conditions

ESD performance depends on a number of conditions. Contact Maxim for a reliability report that documents test setup, methodology, and results.

Human Body Model

Figure 13a shows the Human Body Model, and Figure 13b shows the current waveform it generates when discharged into a low impedance. This model consists of a 100pF capacitor charged to the ESD voltage of interest, which is then discharged into the device through a 1.5kΩ resistor.

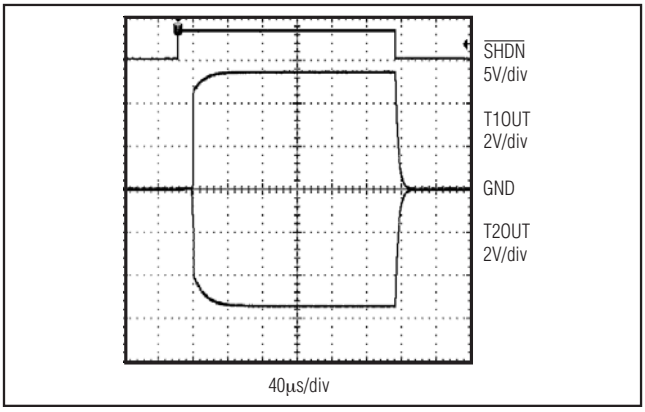

Figure 12. RS-232 Transmitter Outputs when Exiting Shutdown

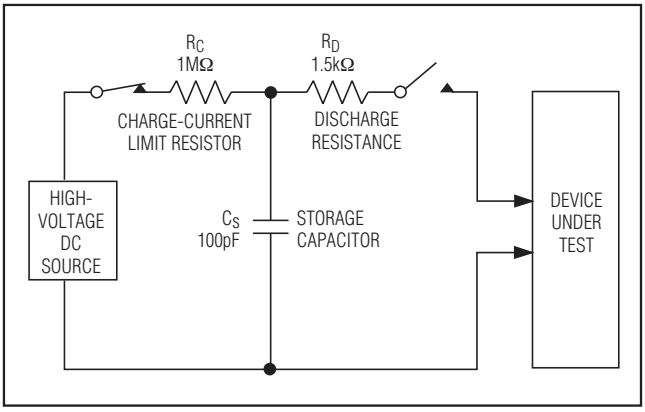

Figure 13a. Human Body ESD Test Model

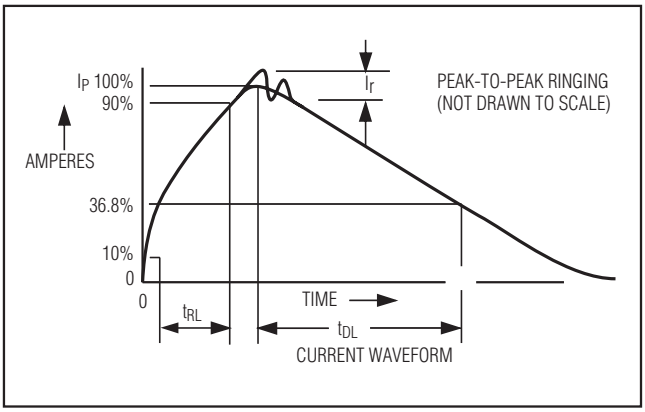

Figure 13b. Human Body Model Current Waveform

Machine Model

The Machine Model for ESD testing uses a 200pF storage capacitor and zero-discharge resistance. It mimics the stress caused by handling during manufacturing and assembly. Of course, all pins (not just RS-485 inputs) require this protection during manufacturing. Therefore, the Machine Model is less relevant to the I/O ports than are the Human Body Model and IEC 1000-4-2.

Applications Information

Capacitor Selection

The capacitor type used for C1–C4 is not critical for proper operation; polarized or nonpolarized capacitors can be used. Ceramic chip capacitors with an X7R dielectric provide the best combination of performance, cost, and size. The charge pump requires 0.1µF capacitors for 3.3V operation. For other supply voltages, see Table 13 for required capacitor values. Do not use values smaller than those listed in Table 13. Increasing the capacitor values reduces ripple on the transmitter outputs and slightly reduces power consumption. C2, C3, and C4 can be changed without changing C1's value. **However, do not increase C1 without also increasing the values of C2, C3, C4, and C_{BYPASS} to maintain the proper ratios to the other capacitors.**

When using the minimum required capacitor values, make sure the capacitance value does not degrade excessively with temperature or voltage. This is typical of Y5V and Z5U dielectric ceramic capacitors. If in doubt, use capacitors with a larger nominal value. The capacitor's equivalent series resistance (ESR), which usually rises at low temperatures, influences the amount of ripple on V+ and V-.

Power-Supply Decoupling

In applications that are sensitive to power-supply noise, decouple V_{CC} to ground with a capacitor of the same value as reservoir capacitors C2, C3, and C4. **Connect the bypass capacitor as close to the IC as possible.**

RS-232 Transmitter Outputs when Exiting Shutdown

Figure 12 shows two transmitter outputs when exiting shutdown mode. As they become active, the two transmitter outputs are shown going to opposite RS-232 levels (one transmitter input is high, the other is low). Each transmitter is loaded with 3kΩ in parallel with 1000pF. The transmitter outputs display no ringing or undesirable transients as they come out of shutdown. Note that the transmitters are enabled only when V- exceeds approximately -3V.

High Data Rates

The MAX3160E/MAX3161E/MAX3162E maintain the RS-232 ±5V required minimum transmitter output voltage even at high data rates. Figure 14 shows a transmitter loopback test circuit. Figure 15 shows a loopback test result at 250kbps, and Figure 16 shows the same test at 1Mbps. Figure 15 demonstrates a single slew-rate limited transmitter driven at 250kbps (FAST = GND) into an RS-232 load in parallel with 1000pF. Figure 17 shows a single transmitter driven at 1Mbps (FAST asserted), loaded with an RS-232 receiver in parallel with 1000pF. These transceivers maintain the RS-232 ±5V minimum transmitter output voltage at data rates up to 1Mbps.

256 Transceivers on the Bus

The standard RS-485 receiver input impedance is 12kΩ (one-unit load), and the standard driver can drive up to 32-unit loads. The MAX3160E has a 1/4-unit load receiver input impedance (48kΩ), allowing up to 128 transceivers to be connected in parallel on one communication line. The MAX3161E/MAX3162E have a 1/8-unit load receiver input impedance (96kΩ), allowing up to 256 transceivers to be connected in parallel on one communication line. Any combination of these devices and/or other RS-485 transceivers with a total of 32-unit loads or fewer can be connected to the line.

RS-485/RS-422 Driver Output Protection

Two mechanisms prevent excessive output current and power dissipation caused by faults or by bus contention. The first, a foldback current limit on the output stage, provides immediate protection against short circuits over the whole common-mode voltage range (see the *Typical Operating Characteristics*). The second, a thermal shutdown circuit, forces the driver outputs into a high-impedance state if the die temperature becomes excessive, typically over +150°C.

Protection Against Wiring Faults

EIA/TIA-485 standards require a common input voltage range of -7V to +12V to prevent damage to the device.

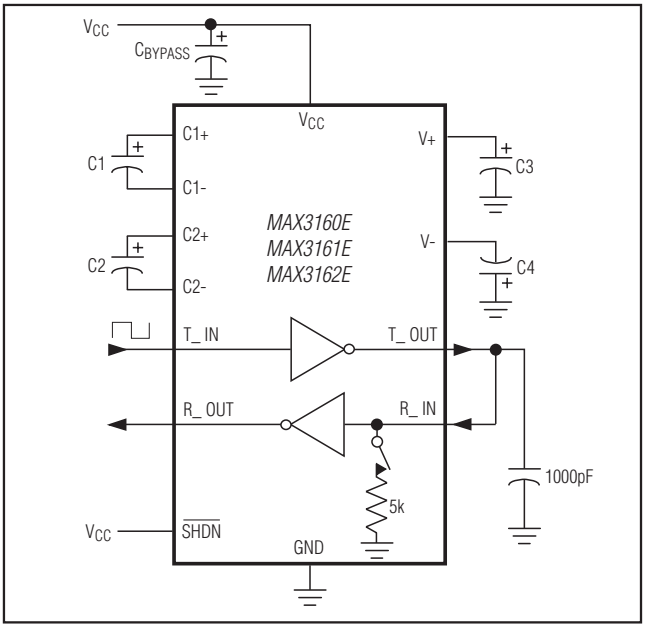

Figure 14. Loopback Test Circuit

The MAX3160E/MAX3161E/MAX3162E inputs are protected to RS-232 levels of ±25V for the receiver inputs and ±13V for the transmitter/driver outputs. This provides additional protection for the RS-485 transceivers against ground differential or faults due to miswiring.

RS-485/RS-422 Reduced EMI and Reflections

The MAX3160E/MAX3161E/MAX3162E can be configured for slew-rate limiting by pulling FAST low. This minimizes EMI and reduces reflections caused by improperly terminated cables. Operation in slew-rate limited mode reduces the amplitudes of high-frequency harmonics.

RS-485/RS-422 Line Length vs. Data Length

The RS-485/RS-422 standard covers line lengths up to 4000ft. For line lengths greater than 4000ft, use the repeater application shown in Figure 17.

RS-232/RS-485 Protocol Translator

Figure 18 shows the MAX3162E configured as an RS-232/RS-485 protocol translator. The direction of translation is controlled through the RTS signal (R1IN). The single-ended RS-232 receiver input signal is translated to a differential RS-485 transmitter output. Similarly, a differential RS-485 receiver input signal is translated to a single-ended RS-232 transmitter output. RS-232 data received on R_{2IN} is transmitted as an RS-485 signal on Z and Y. RS-485 signals received on A and B are transmitted as an RS-232 signal on $T1_{OUT}$.

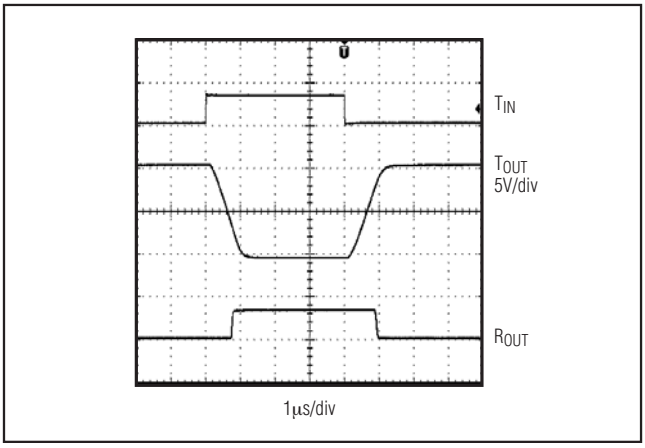

Figure 15. MAX3161E/MAX3162E RS-232 Loopback Test Result at 250kbps, FAST = Low

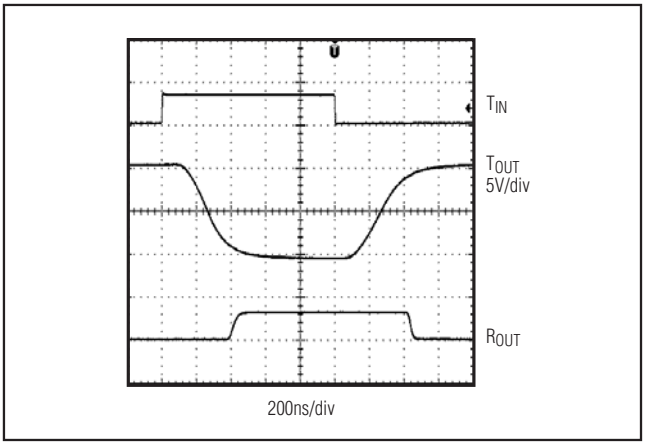

Figure 16. MAX3161E/MAX3162E RS-232 Loopback Test Result at 1Mbps, FAST = High

Multiprotocol Bus

The *Typical Operating Circuit* shows a standard application for the MAX3160E. The MAX3160E's outputs are multiplexed between RS-232 and RS-485 protocols by a microprocessor (µP). The µP also directs the shutdown functions, enable lines, and the duplex of the MAX3160E. Data is transmitted to the MAX3100 UART through an SPI™ port. The UART asynchronously transfers data through the MAX3160E to the pin-selected RS-232 or RS-485 protocal. See Table 14 for commonly used cable connections.

Multiprotocol Bus Multiplexer

The *Typical Application Circuit* shows the MAX3161E configured as a multiprotocol bus multiplexer. The MAX3161E separates the RS-232 and RS-485 lines, but shares the logic pins between modes. This application allows the µP to monitor a point-to-point RS-232 bus, and a multidrop RS-485 interface. The MAX3100 UART asynchronously transfers data through the MAX3161E to the pin-selected RS-232 or RS-485 protocol.

SPI is a registered trademark of Motorola, Inc.

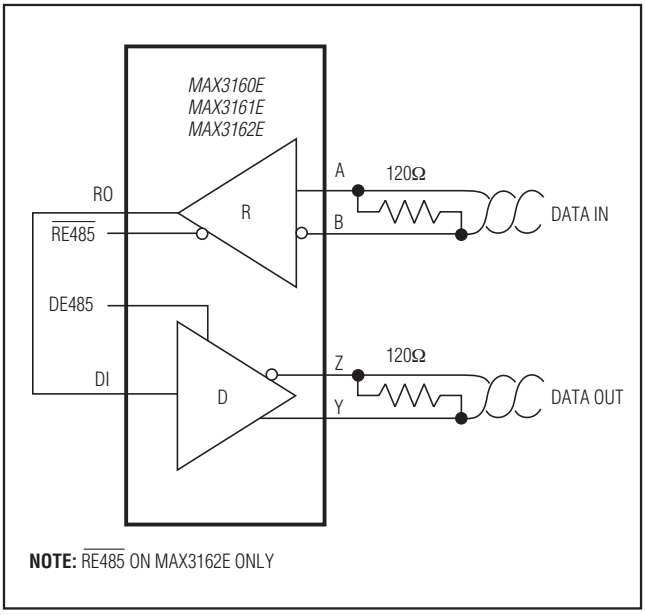

Figure 17. RS-485 Line Repeater

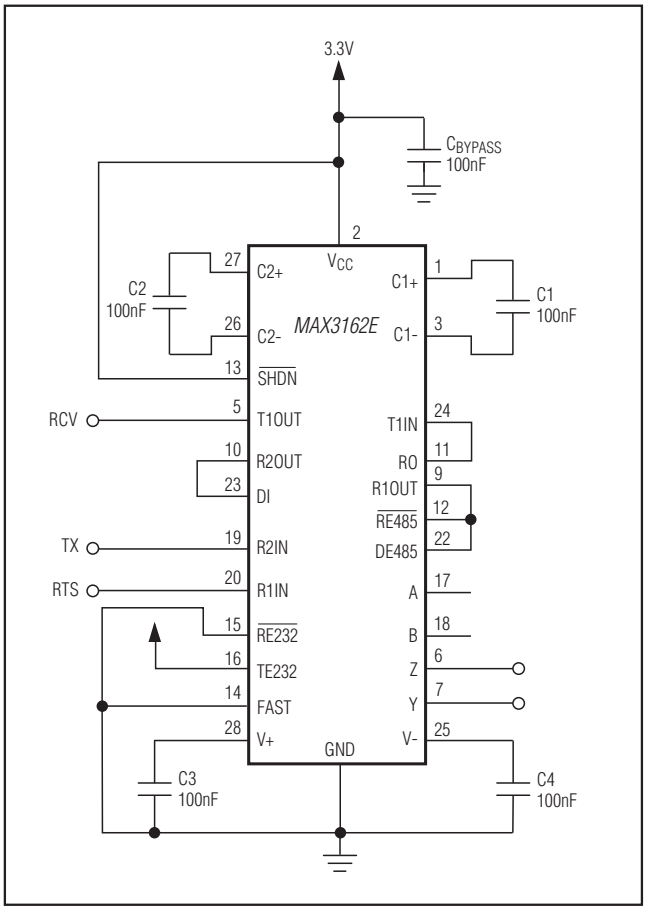

Figure 18. Protocol Translator

RS-232 Transmitters Truth Tables

Table 1. MAX3160E

INPUTS			OUTPUTS
$\overline{SHDN}$	RS-485/ $\overline{RS\text{-}232}$	DI/T1IN, DE485/T2IN	Z(B)/T1OUT, Y(A)/T2OUT
0	X	X	1/8-unit load
1	0	0	1
1	0	1	0
1	1	X	RS-485 mode

Table 2. MAX3161E

INPUTS			OUTPUTS
$\overline{SHDN}$	RS-485/ $\overline{RS\text{-}232}$	DI/T1IN, DE485/T2IN	T1OUT, T2OUT
0	X	X	High-impedance
1	0	0	1
1	0	1	0
1	1	X	High-impedance

Table 3. MAX3162E

INPUTS			OUTPUTS
$\overline{SHDN}$	TE232	T1IN,T2IN	T1OUT, T2OUT
0	X	X	High-impedance
X	0	X	High-impedance
1	1	0	1
1	1	1	0

RS-232 Receivers Truth Tables

Table 4. MAX3160E

INPUTS			OUTPUTS
$\overline{SHDN}$	RS-485/ $\overline{RS\text{-}232}$	B/R1IN, A/R2IN	R1OUT, RO/R2OUT
X	0	0	1
X	0	1	0
X	0	Inputs open	1
X	1	X	R1OUT High-impedance, RO/R2OUT in RS-485 mode

Table 5. MAX3161E

INPUTS			OUTPUTS
$\overline{SHDN}$	RS-485/ $\overline{RS\text{-}232}$	R1IN, R2IN	R1OUT, RO/R2OUT
X	0	0	1
X	0	1	0
X	0	Inputs open	1
X	1	X	R1OUT High-impedance, RO/R2OUT in RS-485 mode

Table 6. MAX3162E

INPUTS			OUTPUTS
$\overline{SHDN}$	$\overline{RE232}$	R1IN, R2IN	R1OUT, R2OUT
X	1	X	High-impedance
X	0	0	1
X	0	1	0
X	0	Inputs open	1

RS-485/RS-422 Drivers Truth Tables

Table 7. MAX3160E

INPUTS				OUTPUTS	
$\overline{SHDN}$	RS-485/$\overline{RS\text{-}232}$	DE485/T2IN	DI/T1IN	Z(B)/T1OUT	Y(A)/T2OUT
0	X	X	X	1/8-unit load	1/8-unit load
1	1	0	X	1/8-unit load	1/8-unit load
1	1	1	0	1	0
1	1	1	1	0	1
X	0	X	X	RS-232 mode	

Table 8. MAX3161E

INPUTS				OUTPUTS	
$\overline{SHDN}$	RS-485/$\overline{RS\text{-}232}$	DE485/T2IN	DI/T1IN	Z(B)	Y(A)
0	X	X	X	1/8-unit load	1/8-unit load
X	0	X	X	1/8-unit load	1/8-unit load
X	X	0	X	1/8-unit load	1/8-unit load
1	1	1	0	1	0
1	1	1	1	0	1

Table 9. MAX3162E

INPUTS			OUTPUTS	
$\overline{SHDN}$	DE485	DI	Z	Y
0	X	X	High-impedance	High-impedance
X	0	X	High-impedance	High-impedance
1	1	0	1	0
1	1	1	0	1

RS-485/RS-422 Receivers Truth Tables

Table 10. MAX3160E

INPUTS					OUTPUT
RS-485/$\overline{RS\text{-}232}$	$\overline{SHDN}$	HDPLX	(A - B)*	(Y - Z)*	RO/R2OUT
1	0	X	X	X	High-impedance up to V_{CC}
1	1	0	≥-50mV	X	1
1	1	0	≤-200mV	X	0
1	1	0	Floating	X	1
1	1	1	X	≥-50mV	1
1	1	1	X	≤-200mV	0
1	1	1	X	Floating	1
0	X	X	X	X	RS-232 mode

** Y and Z correspond to pins Y(A)/T2OUT and Z(B)/T1OUT. A and B correspond to pins A/R2IN and B/R1IN.*

RS-485/RS-422 Receivers Truth Tables (continued)

Table 11. MAX3161E

INPUTS					OUTPUT
RS-485/$\overline{\text{RS-232}}$	**$\overline{\text{SHDN}}$**	**HDPLX**	**A - B**	**Y(A) - Z(B)**	**RO/R2OUT**
1	0	X	X	X	High-impedance up to V_{CC}
1	1	0	≥-50mV	X	1
1	1	0	≤-200mV	X	0
1	1	0	Floating	X	1
1	1	1	X	≥-50mV	1
1	1	1	X	≤-200mV	0
1	1	1	X	Floating	1
0	X	X	X	X	RS-232 mode

Table 12. MAX3162E

INPUTS			OUTPUT
$\overline{\text{SHDN}}$	**$\overline{\text{RE485}}$**	**A - B**	**RO**
0	X	X	High-impedance
X	1	X	High-impedance
1	0	≥-50mV	1
1	0	≤-200mV	0
1	0	Inputs	1

Table 13. Required Minimum Capacitance Values

SUPPLY VOLTAGE (V)	C1 (µF)	C2, C3, C4, C_{BYPASS} (µF)
+3.0 to +3.6	0.1	0.1
+4.5 to +5.5	0.047	0.33
+3.0 to +5.5	0.1	0.47

Table 14. Cable Connections Commonly Used for EIA/TIA-232 and V.24 Asynchronous Interfaces

EIA/TIA-232 STANDARD	CONNECTOR PIN	MAX3160E MAX3161E MAX3162E EQUIVALENT	PIN NUMBER			FUNCTION (AS SEEN BY DTE)
			MAX3160E	MAX3161E	MAX3162E	
DCD	1	—	—	—	—	Data carrier detect
RD	2	R2IN	13	17	19	Received data
TD	3	T1OUT	5	5	5	Transmitted data
DTR	4	—	—	—	—	Data terminal ready
SG	5	GND	4	4	4	Signal ground
DSR	6	—	—	—	—	Data set ready
RTS	7	T2OUT	6	8	8	Request to send (= DTE ready)
CTS	8	R1IN	14	18	20	Clear to send (= DCE ready)
RI	9	—	—	—	—	Ring indicator

Typical Application Circuit

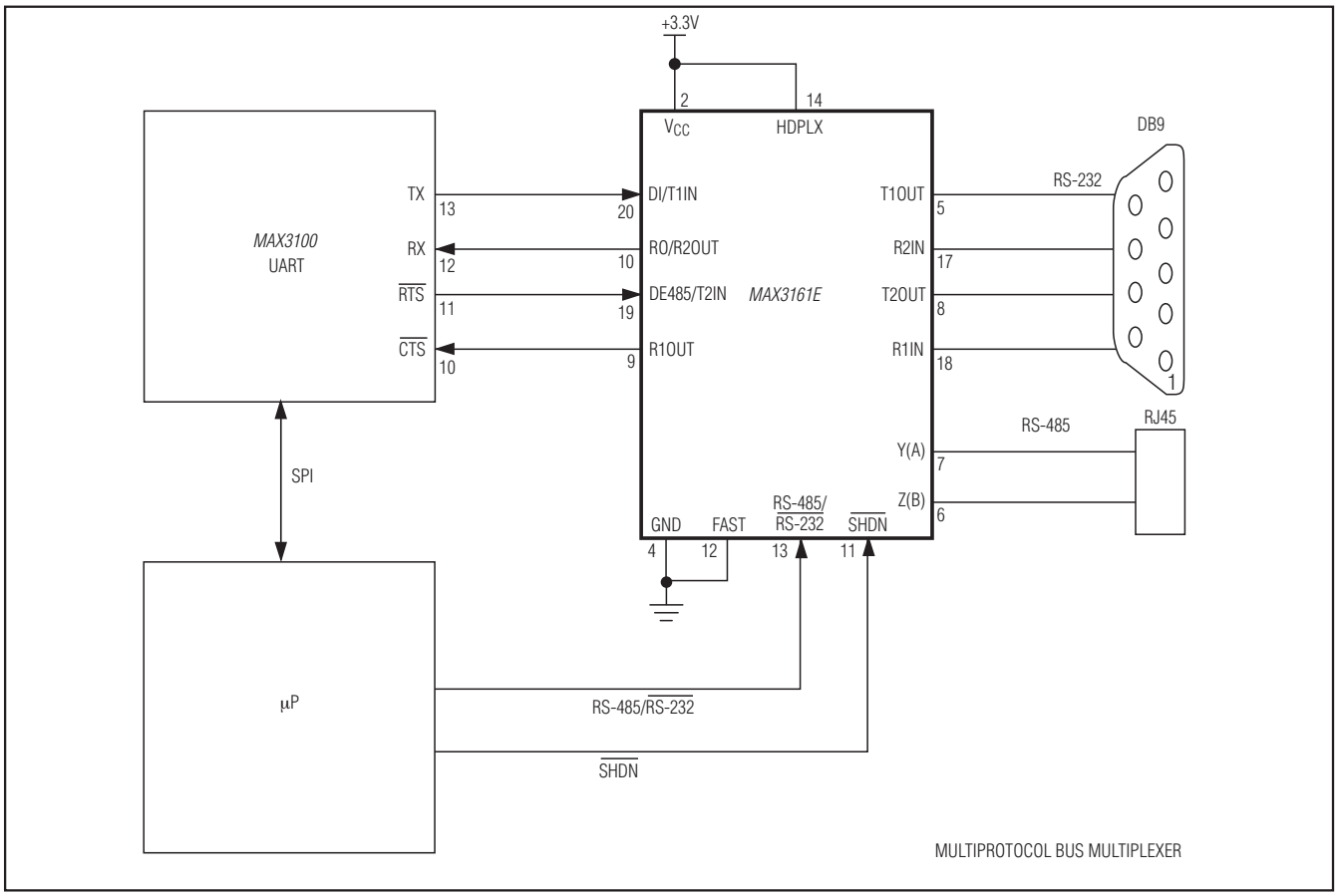

Pin Configurations

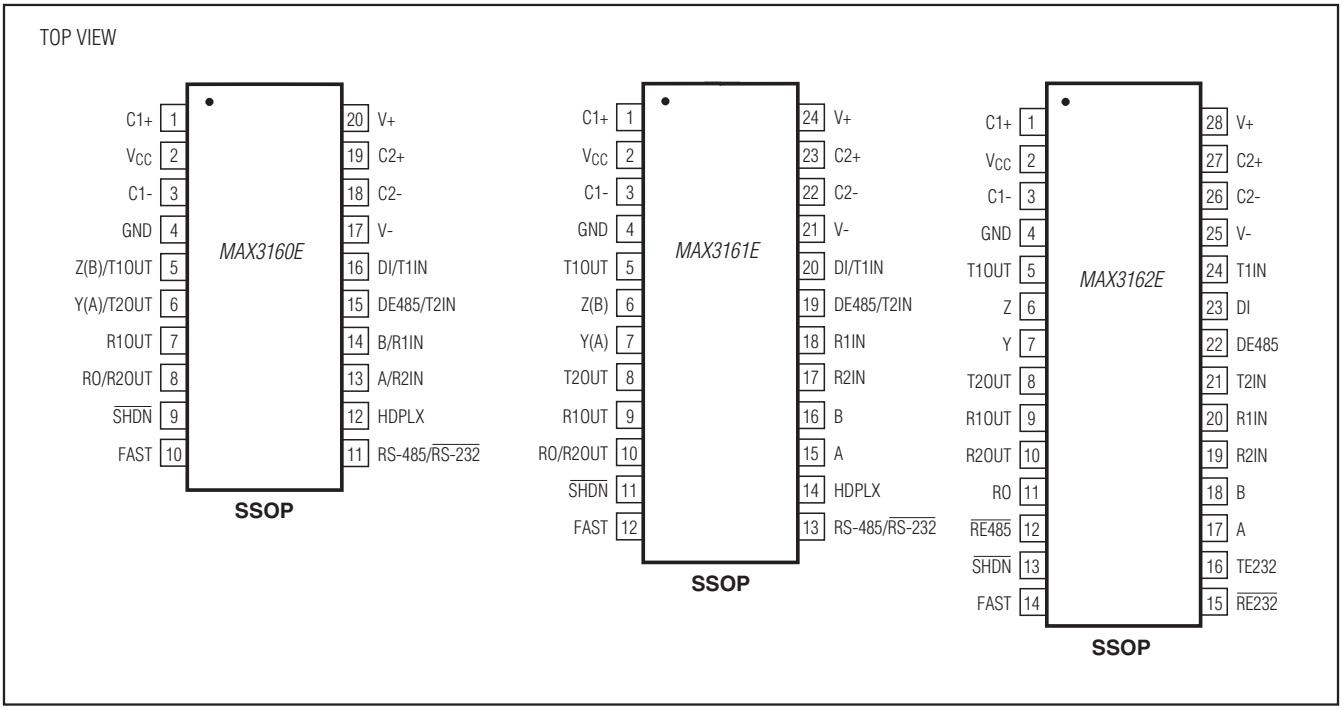

Ordering Information

PART	TEMP RANGE	PIN-PACKAGE	PACKAGE CODE
MAX3160ECAP	0°C to +70°C	20 SSOP	A20-2
MAX3160EEAP	-40°C to +85°C	20 SSOP	A20-2
MAX3161ECAG	0°C to +70°C	24 SSOP	A24-3
MAX3161EEAG	-40°C to +85°C	24 SSOP	A24-3
MAX3162ECAI	0°C to +70°C	28 SSOP	A28-1
MAX3162EEAI	-40°C to +85°C	28 SSOP	A28-1

Selector Guide

PART	DUAL MODE	FLOW-THROUGH PINOUT	RS-485 INPUT UNIT LOADS
MAX3160E	No	Yes	1/4
MAX3161E	No	No	1/8
MAX3162E	Yes	Yes	1/8

Chip Information

TRANSISTOR COUNT: 1805

PROCESS: CMOS

Package Information

For the latest package outline information and land patterns (footprints), go to **www.maximintegrated.com/packages**. Note that a "+", "#", or "-" in the package code indicates RoHS status only. Package drawings may show a different suffix character, but the drawing pertains to the package regardless of RoHS status.

PACKAGE TYPE	PACKAGE CODE	OUTLINE NO.	LAND PATTERN NO.
20 SSOP	A20-2	**21-0056**	**90-0094**
24 SSOP	A24-3	**21-0056**	**90-0010**
28 SSOP	A28-1	**21-0056**	**90-0095**

Revision History

REVISION NUMBER	REVISION DATE	DESCRIPTION	PAGES CHANGED
0	2/05	Initial release	—
1	5/15	Updated *Benefits and Features* section	1

For pricing, delivery, and ordering information, please contact Maxim Direct at 1-888-629-4642, or visit Maxim Integrated's website at www.maximintegrated.com.

Maxim Integrated cannot assume responsibility for use of any circuitry other than circuitry entirely embodied in a Maxim Integrated product. No circuit patent licenses are implied. Maxim Integrated reserves the right to change the circuitry and specifications without notice at any time. The parametric values (min and max limits) shown in the Electrical Characteristics table are guaranteed. Other parametric values quoted in this data sheet are provided for guidance.

Maxim Integrated and the Maxim Integrated logo are trademarks of Maxim Integrated Products, Inc. © 2015 Maxim Integrated Products, Inc.