# U36D Series

UNITED CHEMI-CON

- Large Can
- Screw Terminals
- High Ripple
- Up to 550VDC Rated Voltage
- Dimensions in Inches
- RoHS Compliant
- +85°C Maximum Temperature

The U36D series is ideal for inverter applications requiring high ripple current capabilities. With a voltage range through 550 volts, the number of capacitors in series can be reduced. The U36D capacitors offer very large capacitance of up to 2.2F and a maximum operating temperature of +85°C. These capacitors are available with a variety of high current English or Metric thread terminals. Mounting options available are a three-footed clamp or bottom stud. (A special order two-footed clamp is also available for selected diameters.) All case size dimensions are based on inches. Custom designs are available upon request.

## Summary of Specifications

- **Screw terminals: high and low post, English and Metric thread.**
- **Capacitance range: 68µF to 2.2F.**
- **Voltage range: 6.3 to 550VDC.**
- **Category temperature range: −40°C to +85°C.**
- **Leakage current: 0.02CV(µA) or 5mA, whichever is smaller, after 5 minutes at +25°C.**
- **Standard capacitance tolerance: ±20%**
- **Nominal case size (D×L): D = 35mm (1.375”) to 89mm (3.500”); L = 41mm (1.625”) to 220mm (8.625”).**
- **Rated lifetime: 2,000 hours at +85°C with rated ripple current applied.**

## U36D Specifications - Screw Terminals

| Item | Characteristics |
|---|---|
| Category Temperature Range | −40 to +85°C |
| Rated Voltage Range | 6.3 to 550VDC |
| Capacitance Range | 68μF to 2.2F at +25°C, 120Hz |
| Capacitance Tolerance | ±20% (M) at +25°C, 120Hz |
| Leakage Current | I = 0.02CV (μA) or 5mA, whichever is smaller, after 5 minutes at +25°C.<br>Where I = Max. leakage current (μA), C = Nominal capacitance (μF) and V = Rated voltage (V) |
| Rated Ripple Current Multipliers | Ambient Temperature (°C)<br>≤ +55°C: 2.39<br>+65°C: 2.22<br>+75°C: 1.67<br>+85°C: 1.00<br>Frequency (Hz)<br>50Hz: 0.8<br>120Hz: 1.0<br>300Hz: 1.1<br>1kHz: 1.3<br>3kHz: 1.4 |
| Endurance (Load Life) | The following specifications shall be satisfied when the capacitors are restored to +25°C after subjecting them to DC voltage for 2,000 hours at +85°C with the rated ripple current applied. The sum of the DC voltage and peak AC voltage must not exceed the full rated voltage of the capacitors.<br>Capacitance change: ≤ 20% from initial measurement<br>ESR change : ≤ 300% of initial specified limit<br>Leakage current : ≤ initial specified limit |
| Shelf Life | The following specifications shall be satisfied when the capacitors are restored to +25°C after exposing them for 500 hours at +85°C without voltage applied. The rated voltage shall be applied to the capacitors for a minimum of 30 minutes, at least 24 hours and not more than 48 hours before the measurements.<br>Capacitance change: ≤ 20% from initial measurement<br>ESR change : ≤ 300% of initial specified limit<br>Leakage current : ≤ initial specified limit |

## Diagram of Dimensions - Screw Terminals

### Large Can/Screw Terminals

Unit: inches (mm)

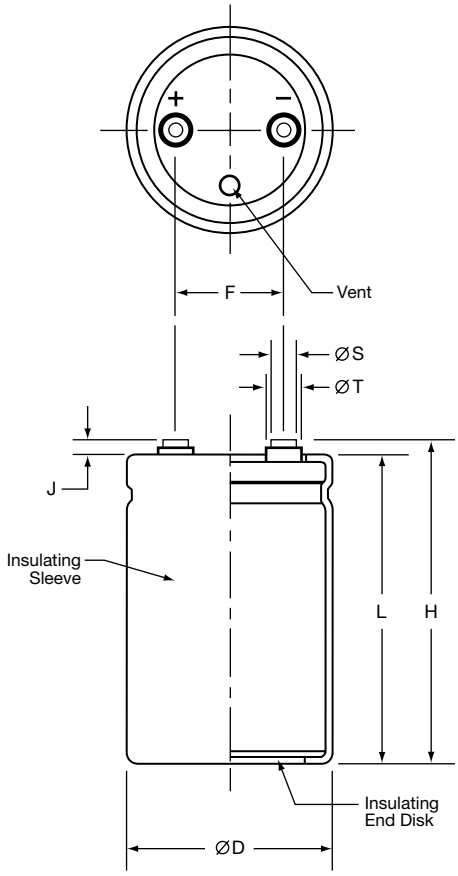


### Case Dimensions

| Case Size Code | øD +0.080 (2.0) | L ±0.040 (1.0) | F ±0.010 (0.25) |
|---|---|---|---|
| A41<br>A54<br>A67<br>A79<br>A92<br>AA5<br>AB7<br>AD0<br>AE3 | 1.375 (35.0) | 1.625 (41)<br>2.125 (54)<br>2.625 (67)<br>3.125 (79)<br>3.625 (92)<br>4.125 (105)<br>4.625 (117)<br>5.125 (130)<br>5.625 (143) | 0.500 (12.7) |
| C48<br>C54<br>C67<br>C79<br>C92<br>CA5<br>CB7<br>CD0<br>CE3 | 2.000 (50.8) | 1.875 (48)<br>2.125 (54)<br>2.625 (67)<br>3.125 (79)<br>3.625 (92)<br>4.125 (105)<br>4.625 (117)<br>5.125 (130)<br>5.625 (143) | 0.875 (22.2) |
| D79<br>DA5<br>DB7<br>DD0<br>DE3 | 2.500 (63.5) | 3.125 (79)<br>4.125 (105)<br>4.625 (117)<br>5.125 (130)<br>5.625 (143) | 1.125 (28.6) |
| E79<br>E92<br>EA5<br>EB7<br>ED0<br>EE3<br>EN0 | 3.000 (76.2) | 3.125 (79)<br>3.625 (92)<br>4.125 (105)<br>4.625 (117)<br>5.125 (130)<br>5.625 (143)<br>8.625 (220) | 1.250 (31.8) |
| FA5<br>FB7<br>FD0<br>FE3 | 3.500 (89.0) | 4.125 (105)<br>4.625 (117)<br>5.125 (130)<br>5.625 (143) | 1.250 (31.8) |

### Terminal Specifications

| Terminal Code | Available Case Diameter | | Thread Size | Minimum Thread Depth | J ±0.020 (0.5) | H ±0.080 (2.0) | øS ±0.010 (0.25) | øT ±0.010 (0.25) |
|---|---|---|---|---|---|---|---|---|
| | øD Code | øD inches (mm) | | | | | | |
| HP | C-E | 1.375 – 3.000 (35.0 – 76.2) | 10-32 NF-2B | 0.375 (9.5) | 0.250 (6.4) | L+J | 0.313 (8.0) | 0.438 (11.1) |
| LP | C-E | 1.375 – 3.000 (35.0 – 76.2) | 10-32 NF-2B | 0.219 (5.6) | 0.063 (1.6) | L+J | 0.313 (8.0) | — |
| HL | C-E | 1.375 – 3.000 (35.0 – 76.2) | M5x0.8-6H | 0.375 (9.5) | 0.250 (6.4) | L+J | 0.313 (8.0) | 0.438 (11.1) |
| ML | C-E | 1.375 – 3.000 (35.0 – 76.2) | M5x0.8-6H | 0.219 (5.6) | 0.063 (1.6) | L+J | 0.313 (8.0) | 0.438 (11.1) |
| CD | D-E | 2.500 – 3.000 (63.5 – 76.2) | M5x0.8-6H | 0.335 (8.5) | 0.200 (5.0) | L+J | 0.512 (13.0) | 0.740 (18.8) |
| CP | D-F | 2.500 – 3.500 (63.5 – 89.0) | 1/4-28 NF-2B | 0.344 (8.7) | 0.093 (2.4) | L+J | 0.689 (17.5) | — |
| CH | D-F | 2.500 – 3.500 (63.5 – 89.0) | 1/4-28 NF-2B | 0.468 (11.9) | 0.250 (6.4) | L+J | 0.689 (17.5) | — |
| CA | D-F | 2.500 – 3.500 (63.5 – 89.0) | M6x1-6H | 0.344 (8.7) | 0.093 (2.4) | L+J | 0.689 (17.5) | — |
| CS | D-F | 2.500 – 3.500 (63.5 – 89.0) | M6x1-6H | 0.468 (11.9) | 0.250 (6.4) | L+J | 0.689 (17.5) | — |

## Mounting Hardware - Screw Terminals

### Type C: Three-Footed Clamp

Unit: mm (inches)

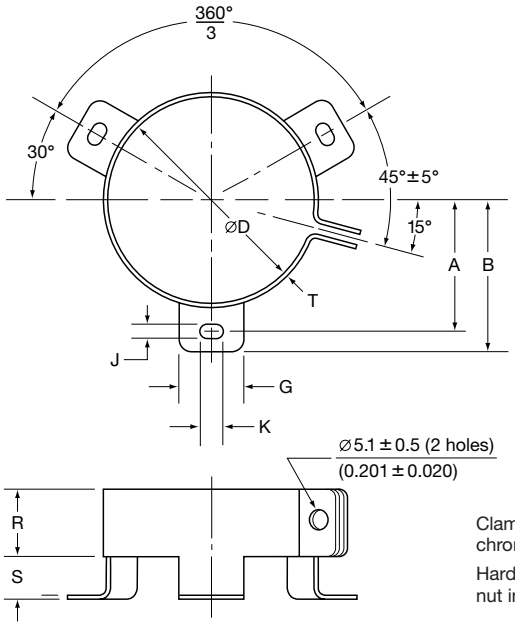


Clamp: Zinc with silver trivalent chromate post treatment.

Hardware: Screw, washer and hexagon nut included with each clamp.

### Type C: Clamp Dimensions

| Mounting Code | Case ØD | A ±1.0 (0.040) | B ±1.0 (0.040) | G ±1.0 (0.040) | J ±0.5 (0.020) | K ±0.5 (0.020) | R ±1.0 (0.040) | S ±1.0 (0.040) | T ±0.5 (0.020) |
|---|---|---|---|---|---|---|---|---|---|
| See Note | 35.0 (1.375) | — | — | — | — | — | — | — | — |
| C | 50.8 (2.000) | 31.8 (1.250) | 36.5 (1.437) | 13.3 (0.524) | 4.5 (0.177) | 7.1 (0.280) | 19.1 (0.751) | 9.5 (0.374) | 0.8 (0.032) |
| C | 63.5 (2.500) | 38.1 (1.500) | 42.9 (1.689) | 13.3 (0.524) | 4.5 (0.177) | 7.1 (0.280) | 19.1 (0.751) | 9.5 (0.374) | 0.8 (0.032) |
| C | 76.2 (3.000) | 44.5 (1.750) | 49.2 (1.937) | 13.3 (0.524) | 4.5 (0.177) | 7.1 (0.280) | 19.1 (0.751) | 9.5 (0.374) | 1.0 (0.040) |
| C | 89.0 (3.500) | 50.8 (2.000) | 56.5 (2.224) | 16.0 (0.630) | 4.5 (0.177) | 8.0 (0.313) | 21.0 (0.827) | 9.0 (0.354) | 1.0 (0.040) |

Note: Type B two-footed clamp available upon request for Ø35, Ø50.8, Ø63.5 and Ø76.2. Consult UCC for specifications.

### Type S: Stud Mounting

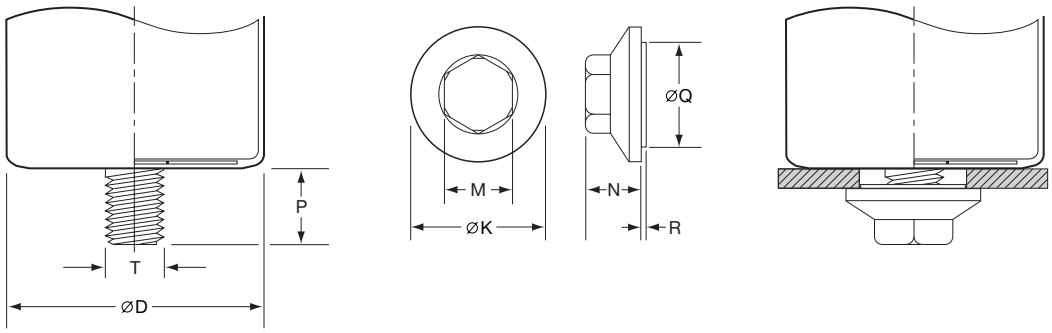


### Type S: Stud Mounting Dimensions

| Mounting Code | P ±1.0 (0.040) | T Thread Size | M ±1.0 (0.040) | N ±1.0 (0.040) | ØK ±2.0 (0.080) | ØQ ±1.0 (0.040) | R ±1.0 (0.040) |
|---|---|---|---|---|---|---|---|
| S | 16.0 (0.630) | M12 | 19.0 (0.748) | 18.0 (0.709) | 30.0 (1.181) | 22.0 (0.866) | 1.40 (0.055) |

## Part Numbering System for U36D Series

When ordering, always specify complete 18-field global part number.

18 Fields

| 1 | 2 | 3 | 4 | 5 | 6 | 7 | 8 | 9 | 10 | 11 | 12 | 13 | 14 | 15 | 16 | 17 | 18 |
|---|---|---|---|---|---|---|---|---|---|---|---|---|---|---|---|---|---|
| E | 3 | 6 | D | 4 | 0 | 1 | H | P | N | 1 | 8 | 2 | M | D | 7 | 9 | M |

**9 Supplement Code.** Field 18.
C = PET insulation with end disk.
F = Coated can.
M = Pb-free PVC insulation with end disk.

**8 Case Size.** Fields 15, 16 and 17.
The single letter diameter code is inserted in field 15.
A = Ø35mm (Ø1.375”)
C = Ø50.8mm (Ø2.000”)
D = Ø63.5mm (Ø2.500”)
E = Ø76.2mm (Ø3.000”)
F = Ø89mm (Ø3.500”)

The double character length code is inserted in fields 16 and 17. For lengths ≤99mm, insert the actual length rounded to nearest millimeter. For lengths of 100mm or more, insert the appropriate alpha numeric code as indicated below.
41 = 41mm (1.625”)
48 = 48mm (1.875”)
54 = 54mm (2.125”)
67 = 67mm (2.625”)
79 = 79mm (3.125”)
92 = 92mm (3.625”)
A5 = 105mm (4.125”)
B7 = 117mm (4.625”)
D0 = 130mm (5.125”)
E3 = 143mm (5.625”)
N0 = 220mm (8.625”)

**7 Capacitance Tolerance.** Field 14.
M = ±20%

**6 Capacitance.** Fields 11, 12 and 13.
Expressed in Microfarads. The first two digits are significant figures inserted in fields 11 and 12, and the third digit inserted in field 13 indicates the number of zeros for capacitance of 10µF or more. R indicates the decimal point for capacitance less than 10µF (e.g. 1R8 = 1.8µF; 180 = 18µF; 181 = 180µF; 182 = 1,800µF; 183 = 18,000µF).

**5 Mounting Hardware.** Field 10.
N = None.
B = Two-footed clamp.
C = Three-footed clamp.
S = Stud mount.

**4 Terminal Type.** Fields 8 and 9.
HP = High post 10-32 NF-2B screw thread.
LP = Low post 10-32 NF-2B screw thread.
HL = High post M5x0.8 screw thread.
ML = Low post M5x0.8 screw thread.
CD = UTE M5x0.8 screw thread.
CP = Low post 1/4-28 NF-2B screw thread.
CH = High post 1/4-28 NF-2B screw thread.
CA = Low post M6x1 screw thread.
CS = High post M6x1 screw thread.

**3 DC Rated Voltage.** Fields 5, 6 and 7.
Expressed in Volts. The first two digits are significant figures inserted in fields 5 and 6, and the third digit inserted in field 7 indicates the number of zeros for rated voltage of 10VDC or more. R indicates the decimal point for rated voltage less than 10VDC (e.g. 4R0 = 4.0VDC; 400 = 40VDC; 401 = 400VDC).

**2 Series Name.** Fields 2, 3 and 4.
Enter the 3-letter/digit series name in fields 2, 3 and 4. If the series name is only 2 letters/digits, place a dash in field 4. For a series name with more than 3 letters/digits, refer to the individual series for the appropriate 3-field series name.

**1 Capacitor Type.** Field 1.
Aluminum Electrolytic Capacitor (Polar).

# U36D Series

## Standard Voltage Ratings - Screw Terminals

| Rated Voltage (WVDC) | Capacitance (µF) | Global Part Number† | Nominal Case Size* D × L (inches) | Case Size Code | Maximum ESR (mΩ) at +25°C, 120Hz | Rated Ripple Current (A rms) at +85°C, 120Hz |
|---|---|---|---|---|---|---|
| **6.3 Volts** 8 Volts Surge | 39,000 | E36D6R3HPN393MA41M | 1.375 × 1.625 | A41 | 42.7 | 4.48 |
| | 68,000 | E36D6R3HPN683MA54M | 1.375 × 2.125 | A54 | 25.5 | 6.35 |
| | 120,000 | E36D6R3HPN124MA79M | 1.375 × 3.125 | A79 | 15.4 | 9.47 |
| | 180,000 | E36D6R3HPN184MAA5M | 1.375 × 4.125 | AA5 | 11.2 | 11.10 |
| | 220,000 | E36D6R3HPN224MAB7M | 1.375 × 4.625 | AB7 | 9.8 | 12.55 |
| | 270,000 | E36D6R3HPN274MAE3M | 1.375 × 5.625 | AE3 | 8.4 | 15.27 |
| | 120,000 | E36D6R3HPN124MC54M | 2.000 × 2.125 | C54 | 16.9 | 7.72 |
| | 220,000 | E36D6R3HPN224MC67M | 2.000 × 2.625 | C67 | 9.1 | 10.85 |
| | 270,000 | E36D6R3HPN274MC79M | 2.000 × 3.125 | C79 | 8.8 | 12.60 |
| | 390,000 | E36D6R3HPN394MC92M | 2.000 × 3.625 | C92 | 7.5 | 15.71 |
| | 470,000 | E36D6R3HPN474MCB7M | 2.000 × 4.625 | CB7 | 5.8 | 17.95 |
| | 560,000 | E36D6R3HPN564MCD0M | 2.000 × 5.125 | CD0 | 5.2 | 19.94 |
| | 680,000 | E36D6R3HPN684MCE3M | 2.000 × 5.625 | CE3 | 5.0 | 22.31 |
| | 470,000 | E36D6R3HPN474MD79M | 2.500 × 3.125 | D79 | 8.9 | 15.39 |
| | 680,000 | E36D6R3HPN684MDA5M | 2.500 × 4.125 | DA5 | 6.5 | 20.69 |
| | 820,000 | E36D6R3HPN824MDB7M | 2.500 × 4.625 | DB7 | 5.8 | 21.02 |
| | 1,000,000 | E36D6R3HPN105MDE3M | 2.500 × 5.625 | DE3 | 4.9 | 24.55 |
| | 680,000 | E36D6R3HPN684ME79M | 3.000 × 3.125 | E79 | 10.0 | 17.32 |
| | 820,000 | E36D6R3HPN824ME92M | 3.000 × 3.625 | E92 | 8.6 | 19.55 |
| | 1,000,000 | E36D6R3HPN105MEA5M | 3.000 × 4.125 | EA5 | 7.5 | 22.10 |
| | 1,200,000 | E36D6R3HPN125MEB7M | 3.000 × 4.625 | EB7 | 6.8 | 24.59 |
| | 1,500,000 | E36D6R3HPN155MEE3M | 3.000 × 5.625 | EE3 | 5.6 | 29.17 |
| | 2,200,000 | E36D6R3HPN225MEN0M | 3.000 × 8.625 | EN0 | 3.9 | 41.67 |
| **10 Volts** 13 Volts Surge | 33,000 | E36D100HPN333MA41M | 1.375 × 1.625 | A41 | 40.9 | 3.65 |
| | 56,000 | E36D100HPN563MA54M | 1.375 × 2.125 | A54 | 25.0 | 4.99 |
| | 82,000 | E36D100HPN823MA67M | 1.375 × 2.625 | A67 | 18.0 | 6.44 |
| | 100,000 | E36D100HPN104MA79M | 1.375 × 3.125 | A79 | 15.0 | 7.65 |
| | 120,000 | E36D100HPN124MA92M | 1.375 × 3.625 | A92 | 12.9 | 8.45 |
| | 150,000 | E36D100HPN154MAA5M | 1.375 × 4.125 | AA5 | 10.9 | 10.03 |
| | 180,000 | E36D100HPN184MAB7M | 1.375 × 4.625 | AB7 | 10.6 | 11.24 |
| | 220,000 | E36D100HPN224MAE3M | 1.375 × 5.625 | AE3 | 8.3 | 12.71 |
| | 82,000 | E36D100HPN823MC48M | 2.000 × 1.875 | C48 | 21.0 | 6.36 |
| | 100,000 | E36D100HPN104MC54M | 2.000 × 2.125 | C54 | 16.6 | 7.37 |
| | 150,000 | E36D100HPN154MC67M | 2.000 × 2.625 | C67 | 11.5 | 9.18 |
| | 220,000 | E36D100HPN224MC79M | 2.000 × 3.125 | C79 | 8.8 | 11.93 |
| | 270,000 | E36D100HPN274MC92M | 2.000 × 3.625 | C92 | 7.4 | 13.07 |
| | 330,000 | E36D100HPN334MCA5M | 2.000 × 4.125 | CA5 | 6.4 | 15.32 |
| | 390,000 | E36D100HPN394MCB7M | 2.000 × 4.625 | CB7 | 5.7 | 16.35 |
| | 470,000 | E36D100HPN474MCE3M | 2.000 × 5.625 | CE3 | 4.9 | 19.08 |
| | 330,000 | E36D100HPN334MD79M | 2.500 × 3.125 | D79 | 8.7 | 12.77 |
| | 560,000 | E36D100HPN564MDA5M | 2.500 × 4.125 | DA5 | 6.3 | 18.77 |
| | 680,000 | E36D100HPN684MDB7M | 2.500 × 4.625 | DB7 | 5.7 | 19.14 |
| | 820,000 | E36D100HPN824MDE3M | 2.500 × 5.625 | DE3 | 4.9 | 20.73 |
| | 680,000 | E36D100HPN684ME92M | 3.000 × 3.625 | E92 | 8.9 | 18.43 |
| | 820,000 | E36D100HPN824MEA5M | 3.000 × 4.125 | EA5 | 7.7 | 21.39 |
| | 1,000,000 | E36D100HPN105MED0M | 3.000 × 5.125 | ED0 | 6.0 | 23.50 |
| | 1,200,000 | E36D100HPN125MEE3M | 3.000 × 5.625 | EE3 | 5.7 | 26.84 |
| | 1,800,000 | E36D100HPN185MEN0M | 3.000 × 8.625 | EN0 | 4.0 | 37.69 |
| **16 Volts** 20 Volts Surge | 22,000 | E36D160HPN223MA41M | 1.375 × 1.625 | A41 | 44.2 | 3.16 |
| | 39,000 | E36D160HPN393MA54M | 1.375 × 2.125 | A54 | 26.1 | 4.50 |
| | 56,000 | E36D160HPN563MA67M | 1.375 × 2.625 | A67 | 19.0 | 5.63 |
| | 68,000 | E36D160HPN683MA79M | 1.375 × 3.125 | A79 | 15.8 | 6.68 |
| | 82,000 | E36D160HPN823MA92M | 1.375 × 3.625 | A92 | 13.5 | 7.86 |
| | 100,000 | E36D160HPN104MAA5M | 1.375 × 4.125 | AA5 | 11.6 | 9.23 |
| | 120,000 | E36D160HPN124MAB7M | 1.375 × 4.625 | AB7 | 10.2 | 10.33 |
| | 150,000 | E36D160HPN154MAE3M | 1.375 × 5.625 | AE3 | 8.7 | 12.69 |
| | 56,000 | E36D160HPN563MC48M | 2.000 × 1.875 | C48 | 21.7 | 5.51 |
| | 68,000 | E36D160HPN683MC54M | 2.000 × 2.125 | C54 | 17.2 | 6.37 |

**†For terminal, mounting and construction options, refer to the part numbering system for descriptions and codes.**
*** Refer to diagram of dimensions for detailed case size specifications.**

# U36D Series

## Standard Voltage Ratings - Screw Terminals

| Rated Voltage (WVDC) | Capacitance (µF) | Global Part Number† | Nominal Case Size* D × L (inches) | Case Size Code | Maximum ESR (mΩ) at +25°C, 120Hz | Rated Ripple Current (A rms) at +85°C, 120Hz |
|---|---|---|---|---|---|---|
| **16 Volts** 20 Volts Surge | 120,000 | E36D160HPN124MC54M | 2.000 × 2.625 | C54 | 12.2 | 9.00 |
| | 150,000 | E36D160HPN154MC67M | 2.000 × 3.125 | C67 | 9.2 | 10.79 |
| | 220,000 | E36D160HPN224MC92M | 2.000 × 3.625 | C92 | 6.7 | 13.19 |
| | 270,000 | E36D160HPN274MCB7M | 2.000 × 4.625 | CB7 | 5.9 | 15.71 |
| | 330,000 | E36D160HPN334MCE3M | 2.000 × 5.625 | CE3 | 5.1 | 19.03 |
| | 220,000 | E36D160HPN224MD79M | 2.500 × 3.125 | D79 | 8.7 | 12.59 |
| | 390,000 | E36D160HPN394MDA5M | 2.500 × 4.125 | DA5 | 6.3 | 18.91 |
| | 470,000 | E36D160HPN474MDB7M | 2.500 × 4.625 | DB7 | 5.7 | 20.24 |
| | 560,000 | E36D160HPN564MDE3M | 2.500 × 5.625 | DE3 | 4.9 | 24.15 |
| | 470,000 | E36D160HPN474ME92M | 3.000 × 3.625 | E92 | 8.7 | 19.11 |
| | 560,000 | E36D160HPN564MEA5M | 3.000 × 4.125 | EA5 | 7.5 | 22.05 |
| | 680,000 | E36D160HPN684MEB7M | 3.000 × 4.625 | EB7 | 6.3 | 22.91 |
| | 820,000 | E36D160HPN824MEE3M | 3.000 × 5.625 | EE3 | 5.6 | 25.28 |
| | 1,200,000 | E36D160HPN125MEN0M | 3.000 × 8.625 | EN0 | 3.9 | 34.52 |
| **25 Volts** 32 Volts Surge | 15,000 | E36D250HPN153MA41M | 1.375 × 1.625 | A41 | 44.0 | 3.05 |
| | 27,000 | E36D250HPN273MA54M | 1.375 × 2.125 | A54 | 25.7 | 4.38 |
| | 39,000 | E36D250HPN393MA67M | 1.375 × 2.625 | A67 | 18.7 | 5.50 |
| | 47,000 | E36D250HPN473MA79M | 1.375 × 3.125 | A79 | 15.7 | 6.49 |
| | 56,000 | E36D250HPN563MA92M | 1.375 × 3.625 | A92 | 13.5 | 7.60 |
| | 68,000 | E36D250HPN683MAA5M | 1.375 × 4.125 | AA5 | 11.6 | 8.89 |
| | 82,000 | E36D250HPN823MAB7M | 1.375 × 4.625 | AB7 | 10.2 | 9.99 |
| | 100,000 | E36D250HPN104MAE3M | 1.375 × 5.625 | AE3 | 8.8 | 12.12 |
| | 39,000 | E36D250HPN393MC48M | 2.000 × 1.875 | C48 | 21.7 | 5.66 |
| | 47,000 | E36D250HPN473MC54M | 2.000 × 2.125 | C54 | 17.2 | 6.52 |
| | 82,000 | E36D250HPN823MC67M | 2.000 × 2.625 | C67 | 12.2 | 9.15 |
| | 100,000 | E36D250HPN104MC79M | 2.000 × 3.125 | C79 | 9.2 | 10.84 |
| | 150,000 | E36D250HPN154MCA5M | 2.000 × 4.125 | CA5 | 6.7 | 13.66 |
| | 180,000 | E36D250HPN184MCB7M | 2.000 × 4.625 | CB7 | 5.9 | 15.71 |
| | 220,000 | E36D250HPN224MCE3M | 2.000 × 5.625 | CE3 | 5.1 | 19.03 |
| | 180,000 | E36D250HPN184MD79M | 2.500 × 3.125 | D79 | 8.7 | 13.34 |
| | 270,000 | E36D250HPN274MDA5M | 2.500 × 4.125 | DA5 | 6.3 | 18.44 |
| | 330,000 | E36D250HPN334MDB7M | 2.500 × 4.625 | DB7 | 5.7 | 20.39 |
| | 390,000 | E36D250HPN394MDE3M | 2.500 × 5.625 | DE3 | 5.0 | 24.24 |
| | 330,000 | E36D250HPN334ME92M | 3.000 × 3.625 | E92 | 8.2 | 19.61 |
| | 390,000 | E36D250HPN394MEA5M | 3.000 × 4.125 | EA5 | 7.8 | 22.54 |
| | 470,000 | E36D250HPN474MEB7M | 3.000 × 4.625 | EB7 | 6.4 | 24.52 |
| | 560,000 | E36D250HPN564MEE3M | 3.000 × 5.625 | EE3 | 5.7 | 26.73 |
| | 820,000 | E36D250HPN824MEN0M | 3.000 × 8.625 | EN0 | 3.9 | 38.03 |
| **35 Volts** 44 Volts Surge | 10,000 | E36D350HPN103MA41M | 1.375 × 1.625 | A41 | 47.1 | 2.57 |
| | 18,000 | E36D350HPN103MA54M | 1.375 × 2.125 | A54 | 27.4 | 3.70 |
| | 27,000 | E36D350HPN103MA67M | 1.375 × 2.625 | A67 | 19.3 | 4.73 |
| | 33,000 | E36D350HPN103MA79M | 1.375 × 3.125 | A79 | 16.1 | 5.63 |
| | 39,000 | E36D350HPN103MA92M | 1.375 × 3.625 | A92 | 13.9 | 6.56 |
| | 47,000 | E36D350HPN103MAA5M | 1.375 × 4.125 | AA5 | 12.0 | 7.65 |
| | 56,000 | E36D350HPN103MAB7M | 1.375 × 4.625 | AB7 | 10.6 | 8.54 |
| | 68,000 | E36D350HPN103MAD0M | 1.375 × 5.125 | AD0 | 10.3 | 9.89 |
| | 22,000 | E36D350HPN223MC48M | 2.000 × 1.875 | C48 | 22.4 | 4.32 |
| | 33,000 | E36D350HPN333MC54M | 2.000 × 2.125 | C54 | 17.7 | 5.55 |
| | 56,000 | E36D350HPN563MC67M | 2.000 × 2.625 | C67 | 12.5 | 7.68 |
| | 68,000 | E36D350HPN683MC79M | 2.000 × 3.125 | C79 | 9.5 | 9.08 |
| | 100,000 | E36D350HPN104MC92M | 2.000 × 3.625 | C92 | 8.0 | 11.09 |
| | 120,000 | E36D350HPN124MCB7M | 2.000 × 4.625 | CB7 | 6.1 | 12.83 |
| | 150,000 | E36D350HPN154MCE3M | 2.000 × 5.625 | CE3 | 5.9 | 15.04 |
| | 120,000 | E36D350HPN124MD79M | 2.500 × 3.125 | D79 | 9.1 | 11.34 |
| | 180,000 | E36D350HPN184MDA5M | 2.500 × 4.125 | DA5 | 6.7 | 15.68 |
| | 220,000 | E36D350HPN224MDB7M | 2.500 × 4.625 | DB7 | 5.8 | 18.17 |
| | 270,000 | E36D350HPN274MDE3M | 2.500 × 5.625 | DE3 | 5.0 | 22.01 |

**† For terminal, mounting and construction options, refer to the part numbering system for descriptions and codes.**
*** Refer to diagram of dimensions for detailed case size specifications.**

# U36D Series

## Standard Voltage Ratings - Screw Terminals

| Rated Voltage (WVDC) | Capacitance (µF) | Global Part Number† | Nominal Case Size* D × L (inches) | Case Size Code | Maximum ESR (mΩ) at +25°C, 120Hz | Rated Ripple Current (A rms) at +85°C, 120Hz |
|---|---|---|---|---|---|---|
| **35 Volts** 44 Volts Surge | 220,000 | E36D350HPN224ME92M | 3.000 × 3.625 | E92 | 8.9 | 16.73 |
| | 270,000 | E36D350HPN274MEA5M | 3.000 × 4.125 | EA5 | 7.8 | 19.58 |
| | 330,000 | E36D350HPN334MED0M | 3.000 × 5.125 | ED0 | 6.0 | 22.72 |
| | 390,000 | E36D350HPN394MEE3M | 3.000 × 5.625 | EE3 | 5.7 | 24.75 |
| | 560,000 | E36D350HPN564MEN0M | 3.000 × 8.625 | EN0 | 3.9 | 35.94 |
| **50 Volts** 63 Volts Surge | 6,800 | E36D500HPN682MA41M | 1.375 × 1.625 | A41 | 48.8 | 3.10 |
| | 12,000 | E36D500HPN123MA54M | 1.375 × 2.125 | A54 | 28.7 | 4.34 |
| | 18,000 | E36D500HPN183MA67M | 1.375 × 2.625 | A67 | 22.8 | 5.40 |
| | 22,000 | E36D500HPN223MA79M | 1.375 × 3.125 | A79 | 16.8 | 6.39 |
| | 27,000 | E36D500HPN273MA92M | 1.375 × 3.625 | A92 | 14.2 | 7.47 |
| | 33,000 | E36D500HPN333MAA5M | 1.375 × 4.125 | AA5 | 12.1 | 8.57 |
| | 39,000 | E36D500HPN393MAB7M | 1.375 × 4.625 | AB7 | 11.8 | 9.34 |
| | 47,000 | E36D500HPN473MAE3M | 1.375 × 5.625 | AE3 | 9.3 | 11.03 |
| | 15,000 | E36D500HPN153MC48M | 2.000 × 1.875 | C48 | 25.4 | 5.13 |
| | 22,000 | E36D500HPN223MC54M | 2.000 × 2.125 | C54 | 18.4 | 6.42 |
| | 33,000 | E36D500HPN333MC67M | 2.000 × 2.625 | C67 | 12.8 | 8.20 |
| | 47,000 | E36D500HPN473MC79M | 2.000 × 3.125 | C79 | 9.7 | 10.09 |
| | 56,000 | E36D500HPN563MC92M | 2.000 × 3.625 | C92 | 8.3 | 11.90 |
| | 68,000 | E36D500HPN683MCA5M | 2.000 × 4.125 | CA5 | 7.1 | 13.36 |
| | 82,000 | E36D500HPN823MCB7M | 2.000 × 4.625 | CB7 | 6.3 | 15.20 |
| | 100,000 | E36D500HPN104MCE3M | 2.000 × 5.625 | CE3 | 5.4 | 17.99 |
| | 68,000 | E36D500HPN683MD79M | 2.500 × 3.125 | D79 | 9.0 | 12.06 |
| | 120,000 | E36D500HPN124MDA5M | 2.500 × 4.125 | DA5 | 6.6 | 15.71 |
| | 150,000 | E36D500HPN154MDB7M | 2.500 × 4.625 | DB7 | 5.9 | 17.81 |
| | 180,000 | E36D500HPN184MDE3M | 2.500 × 5.625 | DE3 | 5.0 | 20.74 |
| | 120,000 | E36D500HPN124ME92M | 3.000 × 3.625 | E92 | 8.3 | 14.86 |
| | 150,000 | E36D500HPN154MEA5M | 3.000 × 4.125 | EA5 | 7.3 | 16.74 |
| | 180,000 | E36D500HPN184MEB7M | 3.000 × 4.625 | EB7 | 6.6 | 18.42 |
| | 220,000 | E36D500HPN224MED0M | 3.000 × 5.125 | ED0 | 6.2 | 20.04 |
| | 390,000 | E36D500HPN394MEN0M | 3.000 × 8.625 | EN0 | 4.0 | 31.15 |
| **63 Volts** 79 Volts Surge | 4,700 | E36D630HPN472MA41M | 1.375 × 1.625 | A41 | 52.8 | 2.99 |
| | 8,200 | E36D630HPN472MA54M | 1.375 × 2.125 | A54 | 31.2 | 4.17 |
| | 12,000 | E36D630HPN472MA67M | 1.375 × 2.625 | A67 | 22.2 | 5.17 |
| | 15,000 | E36D630HPN472MA79M | 1.375 × 3.125 | A79 | 18.2 | 6.15 |
| | 18,000 | E36D630HPN472MA92M | 1.375 × 3.625 | A92 | 15.5 | 7.14 |
| | 22,000 | E36D630HPN472MAA5M | 1.375 × 4.125 | AA5 | 13.2 | 8.22 |
| | 27,000 | E36D630HPN472MAD0M | 1.375 × 5.125 | AD0 | 11.1 | 9.64 |
| | 33,000 | E36D630HPN472MAE3M | 1.375 × 5.625 | AE3 | 9.7 | 10.75 |
| | 12,000 | E36D630HPN123MC48M | 2.000 × 1.875 | C48 | 25.2 | 5.24 |
| | 15,000 | E36D630HPN153MC54M | 2.000 × 2.125 | C54 | 19.8 | 6.21 |
| | 22,000 | E36D630HPN223MC67M | 2.000 × 2.625 | C67 | 13.8 | 7.91 |
| | 33,000 | E36D630HPN333MC79M | 2.000 × 3.125 | C79 | 11.2 | 9.85 |
| | 39,000 | E36D630HPN393MC92M | 2.000 × 3.625 | C92 | 8.7 | 11.62 |
| | 47,000 | E36D630HPN473MCA5M | 2.000 × 4.125 | CA5 | 7.5 | 13.01 |
| | 56,000 | E36D630HPN563MCB7M | 2.000 × 4.625 | CB7 | 6.7 | 14.74 |
| | 68,000 | E36D630HPN683MCE3M | 2.000 × 5.625 | CE3 | 5.7 | 17.51 |
| | 47,000 | E36D630HPN473MD79M | 2.500 × 3.125 | D79 | 9.3 | 11.86 |
| | 82,000 | E36D630HPN823MDA5M | 2.500 × 4.125 | DA5 | 6.8 | 15.60 |
| | 100,000 | E36D630HPN104MDB7M | 2.500 × 4.625 | DB7 | 6.0 | 17.66 |
| | 120,000 | E36D630HPN124MDE3M | 2.500 × 5.625 | DE3 | 5.2 | 20.55 |
| | 100,000 | E36D630HPN104ME92M | 3.000 × 3.625 | E92 | 9.1 | 14.20 |
| | 120,000 | E36D630HPN124MEA5M | 3.000 × 4.125 | EA5 | 7.9 | 16.10 |
| | 150,000 | E36D630HPN154MED0M | 3.000 × 5.125 | ED0 | 6.2 | 19.88 |
| | 180,000 | E36D630HPN184MEE3M | 3.000 × 5.625 | EE3 | 5.9 | 21.42 |
| | 270,000 | E36D630HPN274MEN0M | 3.000 × 8.625 | EN0 | 4.1 | 31.94 |

**† For terminal, mounting and construction options, refer to the part numbering system for descriptions and codes.**
*** Refer to diagram of dimensions for detailed case size specifications.**

# U36D Series

## Standard Voltage Ratings - Screw Terminals

| Rated Voltage (WVDC) | Capacitance (µF) | Global Part Number† | Nominal Case Size* D × L (inches) | Case Size Code | Maximum ESR (mΩ) at +25°C, 120Hz | Rated Ripple Current (A rms) at +85°C, 120Hz |
|---|---|---|---|---|---|---|
| **80 Volts** 100 Volts Surge | 2,700 | E36D800HPN272MA41M | 1.375 × 1.625 | A41 | 61.9 | 2.77 |
| | 4,700 | E36D800HPN472MA54M | 1.375 × 2.125 | A54 | 36.4 | 3.87 |
| | 5,600 | E36D800HPN562MA67M | 1.375 × 2.625 | A67 | 30.0 | 4.44 |
| | 8,200 | E36D800HPN822MA79M | 1.375 × 3.125 | A79 | 21.7 | 5.65 |
| | 10,000 | E36D800HPN103MA92M | 1.375 × 3.625 | A92 | 18.2 | 6.60 |
| | 12,000 | E36D800HPN123MAA5M | 1.375 × 4.125 | AA5 | 15.6 | 7.56 |
| | 15,000 | E36D800HPN153MAD0M | 1.375 × 5.125 | AD0 | 12.9 | 8.93 |
| | 18,000 | E36D800HPN183MAE3M | 1.375 × 5.625 | AE3 | 12.8 | 9.99 |
| | 5,600 | E36D800HPN562MC48M | 2.000 × 1.875 | C48 | 32.5 | 4.62 |
| | 8,200 | E36D800HPN822MC54M | 2.000 × 2.125 | C54 | 23.2 | 5.59 |
| | 12,000 | E36D800HPN123MC67M | 2.000 × 2.625 | C67 | 16.1 | 7.32 |
| | 18,000 | E36D800HPN183MC79M | 2.000 × 3.125 | C79 | 13.0 | 9.22 |
| | 22,000 | E36D800HPN223MC92M | 2.000 × 3.625 | C92 | 9.8 | 10.95 |
| | 27,000 | E36D800HPN273MCA5M | 2.000 × 4.125 | CA5 | 9.8 | 12.39 |
| | 33,000 | E36D800HPN333MCB7M | 2.000 × 4.625 | CB7 | 8.0 | 14.12 |
| | 39,000 | E36D800HPN393MCE3M | 2.000 × 5.625 | CE3 | 6.3 | 16.65 |
| | 27,000 | E36D800HPN273MD79M | 2.500 × 3.125 | D79 | 10.1 | 11.34 |
| | 39,000 | E36D800HPN393MDA5M | 2.500 × 4.125 | DA5 | 7.4 | 15.07 |
| | 56,000 | E36D800HPN563MDD0M | 2.500 × 5.125 | DD0 | 5.9 | 18.51 |
| | 47,000 | E36D800HPN473ME92M | 3.000 × 3.625 | E92 | 8.7 | 14.52 |
| | 56,000 | E36D800HPN563MEA5M | 3.000 × 4.125 | EA5 | 7.5 | 16.51 |
| | 68,000 | E36D800HPN683MEB7M | 3.000 × 4.625 | EB7 | 6.7 | 18.28 |
| | 82,000 | E36D800HPN823MED0M | 3.000 × 5.125 | ED0 | 6.2 | 19.88 |
| | 100,000 | E36D800HPN104MEE3M | 3.000 × 5.625 | EE3 | 5.5 | 21.42 |
| | 120,000 | E36D800HPN124MEN0M | 3.000 × 8.625 | EN0 | 4.1 | 31.53 |
| **100 Volts** 125 Volts Surge | 1,800 | E36D101HPN182MA41M | 1.375 × 1.625 | A41 | 72.1 | 2.57 |
| | 2,700 | E36D101HPN272MA54M | 1.375 × 2.125 | A54 | 47.5 | 3.39 |
| | 3,900 | E36D101HPN392MA67M | 1.375 × 2.625 | A67 | 33.6 | 4.21 |
| | 4,700 | E36D101HPN472MA79M | 1.375 × 3.125 | A79 | 28.1 | 4.97 |
| | 5,600 | E36D101HPN562MA92M | 1.375 × 3.625 | A92 | 23.6 | 6.22 |
| | 8,200 | E36D101HPN822MAB7M | 1.375 × 4.625 | AB7 | 17.2 | 7.39 |
| | 10,000 | E36D101HPN103MAD0M | 1.375 × 5.125 | AD0 | 14.7 | 8.41 |
| | 3,900 | E36D101HPN392MC48M | 2.000 × 1.875 | C48 | 36.4 | 4.38 |
| | 5,600 | E36D101HPN562MC54M | 2.000 × 2.125 | C54 | 26.2 | 5.41 |
| | 8,200 | E36D101HPN822MC67M | 2.000 × 2.625 | C67 | 18.2 | 6.92 |
| | 10,000 | E36D101HPN103MC79M | 2.000 × 3.125 | C79 | 14.8 | 8.23 |
| | 15,000 | E36D101HPN153MC92M | 2.000 × 3.625 | C92 | 12.5 | 10.38 |
| | 18,000 | E36D101HPN183MCB7M | 2.000 × 4.625 | CB7 | 9.0 | 12.65 |
| | 22,000 | E36D101HPN223MCD0M | 2.000 × 5.125 | CD0 | 7.8 | 14.15 |
| | 27,000 | E36D101HPN273MCE3M | 2.000 × 5.625 | CE3 | 7.6 | 15.91 |
| | 18,000 | E36D101HPN183MD79M | 2.500 × 3.125 | D79 | 11.2 | 10.83 |
| | 27,000 | E36D101HPN273MDA5M | 2.500 × 4.125 | DA5 | 8.0 | 14.41 |
| | 33,000 | E36D101HPN333MDB7M | 2.500 × 4.625 | DB7 | 7.1 | 16.47 |
| | 39,000 | E36D101HPN393MDE3M | 2.500 × 5.625 | DE3 | 6.0 | 19.15 |
| | 33,000 | E36D101HPN333ME92M | 3.000 × 3.625 | E92 | 9.3 | 14.05 |
| | 39,000 | E36D101HPN393MEA5M | 3.000 × 4.125 | EA5 | 8.0 | 16.00 |
| | 47,000 | E36D101HPN473MEB7M | 3.000 × 4.625 | EB7 | 7.2 | 17.65 |
| | 56,000 | E36D101HPN563MED0M | 3.000 × 5.125 | ED0 | 6.6 | 19.42 |
| | 82,000 | E36D101HPN823MEN0M | 3.000 × 8.625 | EN0 | 4.3 | 30.41 |
| **160 Volts** 200 Volts Surge | 820 | E36D161HPN821MA41M | 1.375 × 1.625 | A41 | 202.0 | 1.95 |
| | 1,500 | E36D161HPN152MA54M | 1.375 × 2.125 | A54 | 110.0 | 2.83 |
| | 2,200 | E36D161HPN222MA67M | 1.375 × 2.625 | A67 | 76.9 | 3.57 |
| | 2,700 | E36D161HPN272MA79M | 1.375 × 3.125 | A79 | 57.4 | 4.26 |
| | 3,300 | E36D161HPN332MA92M | 1.375 × 3.625 | A92 | 51.1 | 5.05 |
| | 3,900 | E36D161HPN392MAA5M | 1.375 × 4.125 | AA5 | 43.6 | 5.83 |
| | 4,700 | E36D161HPN472MAB7M | 1.375 × 4.625 | AB7 | 36.7 | 6.55 |
| | 5,600 | E36D161HPN562MAE3M | 1.375 × 5.625 | AE3 | 31.0 | 7.85 |

**† For terminal, mounting and construction options, refer to the part numbering system for descriptions and codes.**
*** Refer to diagram of dimensions for detailed case size specifications.**

# U36D Series

## Standard Voltage Ratings - Screw Terminals

| Rated Voltage (WVDC) | Capacitance (µF) | Global Part Number† | Nominal Case Size* D × L (inches) | Case Size Code | Maximum ESR (mΩ) at +25°C, 120Hz | Rated Ripple Current (A rms) at +85°C, 120Hz |
|---|---|---|---|---|---|---|
| **160 Volts** 200 Volts Surge | 2,200 | E36D161HPN222MC48M | 2.000 × 1.875 | C48 | 80.9 | 3.86 |
| | 2,700 | E36D161HPN272MC54M | 2.000 × 2.125 | C54 | 64.7 | 4.49 |
| | 3,900 | E36D161HPN392MC67M | 2.000 × 2.625 | C67 | 44.7 | 5.73 |
| | 5,600 | E36D161HPN562MC79M | 2.000 × 3.125 | C79 | 31.8 | 7.37 |
| | 8,200 | E36D161HPN822MC92M | 2.000 × 3.625 | C92 | 22.4 | 9.53 |
| | 10,000 | E36D161HPN103MCB7M | 2.000 × 4.625 | CB7 | 18.4 | 11.71 |
| | 12,000 | E36D161HPN123MCD0M | 2.000 × 5.125 | CD0 | 15.9 | 13.46 |
| | 10,000 | E36D161HPN103MD79M | 2.500 × 3.125 | D79 | 21.5 | 11.23 |
| | 15,000 | E36D161HPN153MDA5M | 2.500 × 4.125 | DA5 | 14.9 | 15.52 |
| | 18,000 | E36D161HPN183MDB7M | 2.500 × 4.625 | DB7 | 12.5 | 17.82 |
| | 22,000 | E36D161HPN223MDE3M | 2.500 × 5.625 | DE3 | 10.6 | 21.54 |
| | 18,000 | E36D161HPN183ME92M | 3.000 × 3.625 | E92 | 15.2 | 17.74 |
| | 22,000 | E36D161HPN223MEA5M | 3.000 × 4.125 | EA5 | 12.9 | 20.73 |
| | 27,000 | E36D161HPN273MED0M | 3.000 × 5.125 | ED0 | 10.3 | 25.17 |
| | 33,000 | E36D161HPN333MEE3M | 3.000 × 5.625 | EE3 | 9.2 | 29.02 |
| | 47,000 | E36D161HPN473MEN0M | 3.000 × 8.625 | EN0 | 6.7 | 41.98 |
| **200 Volts** 250 Volts Surge | 680 | E36D201HPN681MA41M | 1.375 × 1.625 | A41 | 205.0 | 1.78 |
| | 1,000 | E36D201HPN102MA54M | 1.375 × 2.125 | A54 | 137.0 | 2.31 |
| | 1,500 | E36D201HPN152MA67M | 1.375 × 2.625 | A67 | 92.0 | 2.95 |
| | 1,800 | E36D201HPN182MA79M | 1.375 × 3.125 | A79 | 76.6 | 3.48 |
| | 2,200 | E36D201HPN222MA92M | 1.375 × 3.625 | A92 | 63.0 | 4.12 |
| | 2,700 | E36D201HPN272MAA5M | 1.375 × 4.125 | AA5 | 51.8 | 4.85 |
| | 3,300 | E36D201HPN332MAB7M | 1.375 × 4.625 | AB7 | 43.0 | 5.49 |
| | 3,900 | E36D201HPN392MAD0M | 1.375 × 5.125 | AD0 | 36.8 | 6.27 |
| | 1,500 | E36D201HPN152MC48M | 2.000 × 1.875 | C48 | 97.1 | 3.19 |
| | 2,200 | E36D201HPN222MC54M | 2.000 × 2.125 | C54 | 67.0 | 4.05 |
| | 3,300 | E36D201HPN332MC67M | 2.000 × 2.625 | C67 | 44.8 | 5.27 |
| | 3,900 | E36D201HPN392MC79M | 2.000 × 3.125 | C79 | 37.4 | 6.15 |
| | 5,600 | E36D201HPN562MC92M | 2.000 × 3.625 | C92 | 26.6 | 7.87 |
| | 8,200 | E36D201HPN822MCB7M | 2.000 × 4.625 | CB7 | 18.9 | 10.60 |
| | 10,000 | E36D201HPN103MCE3M | 2.000 × 5.625 | CE3 | 15.7 | 12.83 |
| | 6,800 | E36D201HPN682MD79M | 2.500 × 3.125 | D79 | 24.9 | 9.26 |
| | 10,000 | E36D201HPN103MDA5M | 2.500 × 4.125 | DA5 | 17.3 | 12.67 |
| | 12,000 | E36D201HPN123MDB7M | 2.500 × 4.625 | DB7 | 14.5 | 14.55 |
| | 15,000 | E36D201HPN153MDE3M | 2.500 × 5.625 | DE3 | 12.1 | 17.79 |
| | 12,000 | E36D201HPN123ME92M | 3.000 × 3.625 | E92 | 17.0 | 14.49 |
| | 15,000 | E36D201HPN153MEA5M | 3.000 × 4.125 | EA5 | 14.3 | 17.12 |
| | 18,000 | E36D201HPN183MEB7M | 3.000 × 4.625 | EB7 | 12.4 | 19.64 |
| | 22,000 | E36D201HPN223MED0M | 3.000 × 5.125 | ED0 | 10.8 | 22.72 |
| | 33,000 | E36D201HPN333MEN0M | 3.000 × 8.625 | EN0 | 7.3 | 35.17 |
| **250 Volts** 300 Volts Surge | 470 | E36D251HPN471MA41M | 1.375 × 1.625 | A41 | 271.2 | 1.48 |
| | 820 | E36D251HPN821MA54M | 1.375 × 2.125 | A54 | 154.3 | 2.09 |
| | 1,200 | E36D251HPN122MA67M | 1.375 × 2.625 | A67 | 105.8 | 2.64 |
| | 1,500 | E36D251HPN152MA79M | 1.375 × 3.125 | A79 | 84.7 | 3.18 |
| | 1,800 | E36D251HPN182MA92M | 1.375 × 3.625 | A92 | 70.8 | 3.73 |
| | 2,200 | E36D251HPN222MAA5M | 1.375 × 4.125 | AA5 | 58.4 | 4.38 |
| | 2,700 | E36D251HPN272MAD0M | 1.375 × 5.125 | AD0 | 47.8 | 5.21 |
| | 3,300 | E36D251HPN332MAE3M | 1.375 × 5.625 | AE3 | 39.8 | 6.03 |
| | 1,200 | E36D251HPN122MC48M | 2.000 × 1.875 | C48 | 111.5 | 2.85 |
| | 1,500 | E36D251HPN152MC54M | 2.000 × 2.125 | C54 | 87.9 | 3.34 |
| | 2,200 | E36D251HPN222MC67M | 2.000 × 2.625 | C67 | 59.8 | 4.31 |
| | 3,300 | E36D251HPN332MC79M | 2.000 × 3.125 | C79 | 40.8 | 5.66 |
| | 3,900 | E36D251HPN392MC92M | 2.000 × 3.625 | C92 | 34.4 | 6.57 |
| | 4,700 | E36D251HPN472MCA5M | 2.000 × 4.125 | CA5 | 28.8 | 7.65 |
| | 5,600 | E36D251HPN562MCB7M | 2.000 × 4.625 | CB7 | 24.5 | 8.76 |
| | 6,800 | E36D251HPN682MCE3M | 2.000 × 5.625 | CE3 | 20.3 | 10.58 |
| | 4,700 | E36D251HPN472MD79M | 2.500 × 3.125 | D79 | 31.0 | 7.70 |
| | 8,200 | E36D251HPN822MDA5M | 2.500 × 4.125 | DA5 | 19.2 | 11.47 |

**†For terminal, mounting and construction options, refer to the part numbering system for descriptions and codes.**
*** Refer to diagram of dimensions for detailed case size specifications.**

# U36D Series

## Standard Voltage Ratings - Screw Terminals

| Rated Voltage (WVDC) | Capacitance (µF) | Global Part Number† | Nominal Case Size* D × L (inches) | Case Size Code | Maximum ESR (mΩ) at +25°C, 120Hz | Rated Ripple Current (A rms) at +85°C, 120Hz |
|---|---|---|---|---|---|---|
| **250 Volts** 300 Volts Surge | 10,000 | E36D251HPN103MDB7M | 2.500 × 4.625 | DB7 | 18.4 | 13.28 |
| | 12,000 | E36D251HPN123MDE3M | 2.500 × 5.625 | DE3 | 13.6 | 15.91 |
| | 10,000 | E36D251HPN103ME92M | 3.000 × 3.625 | E92 | 18.8 | 13.22 |
| | 12,000 | E36D251HPN123MEA5M | 3.000 × 4.125 | EA5 | 15.9 | 15.31 |
| | 15,000 | E36D251HPN153MED0M | 3.000 × 5.125 | ED0 | 12.6 | 18.76 |
| | 18,000 | E36D251HPN183MEE3M | 3.000 × 5.625 | EE3 | 11.2 | 21.43 |
| | 27,000 | E36D251HPN273MEN0M | 3.000 × 8.625 | EN0 | 7.7 | 31.82 |
| **315 Volts** 365 Volts Surge | 390 | E36D3B1HPN391MA54M | 1.375 × 2.125 | A54 | 513.0 | 1.44 |
| | 560 | E36D3B1HPN391MA67M | 1.375 × 2.625 | A67 | 356.0 | 1.80 |
| | 820 | E36D3B1HPN821MA79M | 1.375 × 3.125 | A79 | 243.0 | 2.35 |
| | 1,000 | E36D3B1HPN102MA92M | 1.375 × 3.625 | A92 | 200.0 | 2.78 |
| | 1,200 | E36D3B1HPN122MAB7M | 1.375 × 4.625 | AB7 | 166.0 | 3.31 |
| | 1,500 | E36D3B1HPN152MAD0M | 1.375 × 5.125 | AD0 | 133.0 | 3.89 |
| | 560 | E36D3B1HPN561MC48M | 2.000 × 1.875 | C48 | 366.0 | 1.95 |
| | 820 | E36D3B1HPN821MC54M | 2.000 × 2.125 | C54 | 248.0 | 2.47 |
| | 1,200 | E36D3B1HPN122MC67M | 2.000 × 2.625 | C67 | 168.0 | 3.18 |
| | 1,500 | E36D3B1HPN152MC79M | 2.000 × 3.125 | C79 | 134.0 | 3.81 |
| | 2,200 | E36D3B1HPN222MC92M | 2.000 × 3.625 | C92 | 92.0 | 4.94 |
| | 2,700 | E36D3B1HPN272MCB7M | 2.000 × 4.625 | CB7 | 74.9 | 6.09 |
| | 3,300 | E36D3B1HPN332MCD0M | 2.000 × 5.125 | CD0 | 61.8 | 7.06 |
| | 3,900 | E36D3B1HPN392MCE3M | 2.000 × 5.625 | CE3 | 52.5 | 8.01 |
| | 2,700 | E36D3B1HPN272MD79M | 2.500 × 3.125 | D79 | 77.5 | 5.83 |
| | 3,900 | E36D3B1HPN392MDA5M | 2.500 × 4.125 | DA5 | 53.8 | 7.91 |
| | 4,700 | E36D3B1HPN472MDB7M | 2.500 × 4.625 | DB7 | 44.7 | 9.11 |
| | 5,600 | E36D3B1HPN562MDD0M | 2.500 × 5.125 | DD0 | 38.1 | 10.41 |
| | 4,700 | E36D3B1HPN472ME92M | 3.000 × 3.625 | E92 | 46.8 | 9.07 |
| | 5,600 | E36D3B1HPN562MEA5M | 3.000 × 4.125 | EA5 | 39.4 | 10.46 |
| | 6,800 | E36D3B1HPN682MEB7M | 3.000 × 4.625 | EB7 | 32.9 | 12.07 |
| | 8,200 | E36D3B1HPN822MED0M | 3.000 × 5.125 | ED0 | 27.8 | 13.87 |
| | 15,000 | E36D3B1HPN153MEN0M | 3.000 × 8.625 | EN0 | 15.9 | 23.71 |
| **350 Volts** 400 Volts Surge | 220 | E36D351HPN221MA41M | 1.375 × 1.625 | A41 | 887.0 | 1.17 |
| | 330 | E36D351HPN331MA54M | 1.375 × 2.125 | A54 | 545.0 | 1.53 |
| | 470 | E36D351HPN471MA67M | 1.375 × 2.625 | A67 | 379.0 | 1.91 |
| | 680 | E36D351HPN681MA79M | 1.375 × 3.125 | A79 | 262.0 | 2.47 |
| | 820 | E36D351HPN821MA92M | 1.375 × 3.625 | A92 | 217.0 | 2.91 |
| | 1,000 | E36D351HPN102MAA5M | 1.375 × 4.125 | AA5 | 178.0 | 3.41 |
| | 1,200 | E36D351HPN122MAD0M | 1.375 × 5.125 | AD0 | 148.0 | 4.01 |
| | 470 | E36D351HPN471MC48M | 2.000 × 1.875 | C48 | 390.0 | 2.06 |
| | 680 | E36D351HPN681MC54M | 2.000 × 2.125 | C54 | 267.0 | 2.60 |
| | 1,000 | E36D351HPN102MC67M | 2.000 × 2.625 | C67 | 180.0 | 3.35 |
| | 1,200 | E36D351HPN122MC79M | 2.000 × 3.125 | C79 | 149.0 | 3.94 |
| | 1,800 | E36D351HPN182MC92M | 2.000 × 3.625 | C92 | 100.0 | 5.15 |
| | 2,200 | E36D351HPN222MCA5M | 2.000 × 4.125 | CA5 | 82.5 | 6.04 |
| | 2,700 | E36D351HPN272MCB7M | 2.000 × 4.625 | CB7 | 67.3 | 7.03 |
| | 3,300 | E36D351HPN332MCE3M | 2.000 × 5.625 | CE3 | 55.3 | 8.51 |
| | 2,200 | E36D351HPN222MD79M | 2.500 × 3.125 | D79 | 84.5 | 6.08 |
| | 3,300 | E36D351HPN332MDA5M | 2.500 × 4.125 | DA5 | 56.6 | 8.40 |
| | 3,900 | E36D351HPN392MDB7M | 2.500 × 4.625 | DB7 | 47.9 | 9.58 |
| | 4,700 | E36D351HPN472MDD0M | 2.500 × 5.125 | DD0 | 40.4 | 11.02 |
| | 3,900 | E36D351HPN392ME92M | 3.000 × 3.625 | E92 | 49.9 | 9.54 |
| | 4,700 | E36D351HPN472MEA5M | 3.000 × 4.125 | EA5 | 41.7 | 11.06 |
| | 5,600 | E36D351HPN562MEB7M | 3.000 × 4.625 | EB7 | 35.3 | 12.65 |
| | 6,800 | E36D351HPN682MED0M | 3.000 × 5.125 | ED0 | 29.6 | 14.59 |
| | 8,200 | E36D351HPN822MEE3M | 3.000 × 5.625 | EE3 | 25.1 | 16.70 |
| | 12,000 | E36D351HPN123MEN0M | 3.000 × 8.625 | EN0 | 17.4 | 24.49 |
| | 6,800 | E36D351LLN682MFA5M | 3.500 × 4.125 | FA5 | 32.0 | 11.39 |
| | 8,200 | E36D351LLN822MFB7M | 3.500 × 4.625 | FB7 | 27.0 | 12.88 |
| | 10,000 | E36D351LLN103MFE3M | 3.500 × 5.625 | FE3 | 23.0 | 15.17 |

**† For terminal, mounting and construction options, refer to the part numbering system for descriptions and codes.**
*** Refer to diagram of dimensions for detailed case size specifications.**

# U36D Series

## Standard Voltage Ratings - Screw Terminals

| Rated Voltage (WVDC) | Capacitance (µF) | Global Part Number† | Nominal Case Size* D × L (inches) | Case Size Code | Maximum ESR (mΩ) at +25°C, 120Hz | Rated Ripple Current (A rms) at +85°C, 120Hz |
|---|---|---|---|---|---|---|
| **400 Volts** 450 Volts Surge | 180 | E36D401HPN181MA41M | 1.375 × 1.625 | A41 | 921.0 | 1.06 |
| | 330 | E36D401HPN331MA54M | 1.375 × 2.125 | A54 | 495.0 | 1.53 |
| | 390 | E36D401HPN391MA67M | 1.375 × 2.625 | A67 | 416.0 | 1.74 |
| | 560 | E36D401HPN561MA79M | 1.375 × 3.125 | A79 | 289.0 | 2.24 |
| | 680 | E36D401HPN681MA92M | 1.375 × 3.625 | A92 | 238.0 | 2.65 |
| | 820 | E36D401HPN821MAA5M | 1.375 × 4.125 | AA5 | 197.0 | 3.09 |
| | 1,000 | E36D401HPN102MAB7M | 1.375 × 4.625 | AB7 | 162.0 | 3.49 |
| | 1,200 | E36D401HPN122MAE3M | 1.375 × 5.625 | AE3 | 135.0 | 4.20 |
| | 390 | E36D401HPN391MC48M | 2.000 × 1.875 | C48 | 416.0 | 1.88 |
| | 560 | E36D401HPN561MC54M | 2.000 × 2.125 | C54 | 295.0 | 2.36 |
| | 820 | E36D401HPN821MC67M | 2.000 × 2.625 | C67 | 200.0 | 3.04 |
| | 1,200 | E36D401HPN122MC79M | 2.000 × 3.125 | C79 | 137.0 | 3.94 |
| | 1,500 | E36D401HPN152MC92M | 2.000 × 3.625 | C92 | 109.0 | 4.71 |
| | 1,800 | E36D401HPN182MCA5M | 2.000 × 4.125 | CA5 | 91.5 | 5.47 |
| | 2,200 | E36D401HPN222MCB7M | 2.000 × 4.625 | CB7 | 75.0 | 6.34 |
| | 2,700 | E36D401HPN272MCE3M | 2.000 × 5.625 | CE3 | 61.3 | 7.70 |
| | 1,800 | E36D401HPN182MD79M | 2.500 × 3.125 | D79 | 93.5 | 5.50 |
| | 2,700 | E36D401HPN272MDA5M | 2.500 × 4.125 | DA5 | 62.6 | 7.60 |
| | 3,900 | E36D401HPN392MDB7M | 2.500 × 4.625 | DB7 | 44.2 | 9.58 |
| | 4,700 | E36D401HPN472MDE3M | 2.500 × 5.625 | DE3 | 37.0 | 11.50 |
| | 3,900 | E36D401HPN392ME92M | 3.000 × 3.625 | E92 | 46.5 | 9.54 |
| | 4,700 | E36D401HPN472MEA5M | 3.000 × 4.125 | EA5 | 38.8 | 11.06 |
| | 5,600 | E36D401HPN562MED0M | 3.000 × 5.125 | ED0 | 32.3 | 13.24 |
| | 6,800 | E36D401HPN682MEE3M | 3.000 × 5.625 | EE3 | 27.1 | 15.21 |
| | 10,000 | E36D401HPN103MEN0M | 3.000 × 8.625 | EN0 | 18.7 | 22.36 |
| | 5,600 | E36D401LLN562MFA5M | 3.500 × 4.125 | FA5 | 37.0 | 10.59 |
| | 6,800 | E36D401LLN682MFB7M | 3.500 × 4.625 | FB7 | 31.0 | 12.02 |
| | 8,200 | E36D401LLN822MFD0M | 3.500 × 5.125 | FD0 | 26.0 | 13.82 |
| **450 Volts** 500 Volts Surge | 150 | E36D451HPN151MA41M | 1.375 × 1.625 | A41 | 1,687.8 | 0.96 |
| | 270 | E36D451HPN271MA54M | 1.375 × 2.125 | A54 | 923.3 | 1.39 |
| | 330 | E36D451HPN331MA67M | 1.375 × 2.625 | A67 | 749.9 | 1.60 |
| | 470 | E36D451HPN471MA79M | 1.375 × 3.125 | A79 | 525.5 | 2.05 |
| | 560 | E36D451HPN561MA92M | 1.375 × 3.625 | A92 | 440.3 | 2.40 |
| | 680 | E36D451HPN681MAA5M | 1.375 × 4.125 | AA5 | 362.5 | 2.81 |
| | 820 | E36D451HPN821MAB7M | 1.375 × 4.625 | AB7 | 300.7 | 3.16 |
| | 1,000 | E36D451HPN102MAE3M | 1.375 × 5.625 | AE3 | 246.6 | 3.83 |
| | 330 | E36D451HPN331MC48M | 2.000 × 1.875 | C48 | 653.4 | 1.73 |
| | 470 | E36D451HPN471MC54M | 2.000 × 2.125 | C54 | 535.9 | 2.16 |
| | 680 | E36D451HPN681MC67M | 2.000 × 2.625 | C67 | 366.8 | 2.76 |
| | 1,000 | E36D451HPN102MC79M | 2.000 × 3.125 | C79 | 249.0 | 3.60 |
| | 1,200 | E36D451HPN122MC92M | 2.000 × 3.625 | C92 | 207.1 | 4.21 |
| | 1,500 | E36D451HPN152MCA5M | 2.000 × 4.125 | CA5 | 165.8 | 4.99 |
| | 1,800 | E36D451HPN182MCB7M | 2.000 × 4.625 | CB7 | 138.3 | 5.74 |
| | 2,200 | E36D451HPN222MCE3M | 2.000 × 5.625 | CE3 | 113.2 | 6.95 |
| | 1,500 | E36D451HPN152MD79M | 2.500 × 3.125 | D79 | 168.2 | 5.02 |
| | 2,200 | E36D451HPN222MDA5M | 2.500 × 4.125 | DA5 | 114.5 | 6.86 |
| | 2,700 | E36D451HPN272MDB7M | 2.500 × 4.625 | DB7 | 93.7 | 7.97 |
| | 3,300 | E36D451HPN332MDD0M | 2.500 × 5.125 | DD0 | 77.1 | 9.23 |
| | 3,900 | E36D451HPN392MDE3M | 2.500 × 5.625 | DE3 | 65.6 | 10.47 |
| | 2,700 | E36D451HPN272ME92M | 3.000 × 3.625 | E92 | 95.6 | 7.93 |
| | 3,900 | E36D451HPN392MEA5M | 3.000 × 4.125 | EA5 | 78.4 | 10.08 |
| | 4,700 | E36D451HPN472MED0M | 3.000 × 5.125 | ED0 | 55.7 | 12.13 |
| | 5,600 | E36D451HPN562MEE3M | 3.000 × 5.625 | EE3 | 47.2 | 13.80 |
| | 8,200 | E36D451HPN822MEN0M | 3.000 × 8.625 | EN0 | 32.4 | 20.25 |
| | 4,700 | E36D451LLN472MFA5M | 3.500 × 4.125 | FA5 | 67.0 | 7.87 |
| | 5,600 | E36D451LLN562MFB7M | 3.500 × 4.625 | FB7 | 56.0 | 8.94 |
| | 6,800 | E36D451LLN682MFD0M | 3.500 × 5.125 | FD0 | 47.0 | 10.28 |

**†For terminal, mounting and construction options, refer to the part numbering system for descriptions and codes.**
*** Refer to diagram of dimensions for detailed case size specifications.**

# U36D Series

## Standard Voltage Ratings - Screw Terminals

| Rated Voltage (WVDC) | Capacitance (µF) | Global Part Number† | Nominal Case Size* D × L (inches) | Case Size Code | Maximum ESR (mΩ) at +25°C, 120Hz | Rated Ripple Current (A rms) at +85°C, 120Hz |
|---|---|---|---|---|---|---|
| **500 Volts** 550 Volts Surge | 100 | E36D501HPN101MA41M | 1.375 × 1.625 | A41 | 3,918.0 | 0.60 |
| | 180 | E36D501HPN181MA54M | 1.375 × 2.125 | A54 | 2,141.0 | 0.87 |
| | 220 | E36D501HPN221MA67M | 1.375 × 2.625 | A67 | 1,739.0 | 1.00 |
| | 330 | E36D501HPN331MA79M | 1.375 × 3.125 | A79 | 1,155.0 | 1.32 |
| | 390 | E36D501HPN391MA92M | 1.375 × 3.625 | A92 | 975.0 | 1.54 |
| | 470 | E36D501HPN471MAA5M | 1.375 × 4.125 | AA5 | 808.0 | 1.79 |
| | 560 | E36D501HPN561MAB7M | 1.375 × 4.625 | AB7 | 677.0 | 2.00 |
| | 680 | E36D501HPN681MAE3M | 1.375 × 5.625 | AE3 | 557.0 | 2.42 |
| | 220 | E36D501HPN221MC48M | 2.000 × 1.875 | C48 | 1,453.0 | 1.08 |
| | 330 | E36D501HPN331MC54M | 2.000 × 2.125 | C54 | 1,177.0 | 1.39 |
| | 470 | E36D501HPN471MC67M | 2.000 × 2.625 | C67 | 817.0 | 1.76 |
| | 680 | E36D501HPN681MC79M | 2.000 × 3.125 | C79 | 563.0 | 2.27 |
| | 820 | E36D501HPN821MC92M | 2.000 × 3.625 | C92 | 465.0 | 2.67 |
| | 1,000 | E36D501HPN102MCA5M | 2.000 × 4.125 | CA5 | 381.0 | 3.12 |
| | 1,200 | E36D501HPN122MCB7M | 2.000 × 4.625 | CB7 | 317.0 | 3.59 |
| | 1,500 | E36D501HPN152MCE3M | 2.000 × 5.625 | CE3 | 253.0 | 4.40 |
| | 1,000 | E36D501HPN102MD79M | 2.500 × 3.125 | D79 | 320.0 | 3.14 |
| | 1,500 | E36D501HPN152MDA5M | 2.500 × 4.125 | DA5 | 213.0 | 4.35 |
| | 2,200 | E36D501HPN222MDB7M | 2.500 × 4.625 | DB7 | 212.0 | 5.52 |
| | 2,200 | E36D501HPN222ME92M | 3.000 × 3.625 | E92 | 175.0 | 5.49 |
| | 2,700 | E36D501HPN272MEB7M | 3.000 × 4.625 | EB7 | 142.0 | 6.74 |
| | 3,900 | E36D501HPN392MEE3M | 3.000 × 5.625 | EE3 | 99.0 | 8.83 |
| | 5,600 | E36D501HPN562MEN0M | 3.000 × 8.625 | EN0 | 69.0 | 12.83 |
| | 3,900 | E36D501LLN392MFA5M | 3.500 × 4.125 | FA5 | 131.0 | 5.63 |
| | 4,700 | E36D501LLN472MFB7M | 3.500 × 4.625 | FB7 | 109.0 | 6.62 |
| | 5,600 | E36D501LLN562MFD0M | 3.500 × 5.125 | FD0 | 92.0 | 7.35 |
| | 6,800 | E36D501LLN682MFE3M | 3.500 × 5.625 | FE3 | 76.0 | 8.35 |
| **550 Volts** 600 Volts Surge | 68 | E36D551HPN680MA41M | 1.375 × 1.625 | A41 | 3,997.0 | 0.50 |
| | 120 | E36D551HPN121MA54M | 1.375 × 2.125 | A54 | 2,227.0 | 0.71 |
| | 150 | E36D551HPN151MA67M | 1.375 × 2.625 | A67 | 1,769.0 | 0.83 |
| | 220 | E36D551HPN221MA79M | 1.375 × 3.125 | A79 | 1,202.0 | 1.08 |
| | 270 | E36D551HPN271MA92M | 1.375 × 3.625 | A92 | 977.0 | 1.28 |
| | 330 | E36D551HPN331MAB7M | 1.375 × 4.625 | AB7 | 797.0 | 1.54 |
| | 390 | E36D551HPN391MAD0M | 1.375 × 5.125 | AD0 | 674.0 | 1.75 |
| | 470 | E36D551HPN471MAE3M | 1.375 × 5.625 | AE3 | 559.0 | 2.01 |
| | 220 | E36D551HPN221MC54M | 2.000 × 2.125 | C54 | 1,224.0 | 1.13 |
| | 330 | E36D551HPN331MC67M | 2.000 × 2.625 | C67 | 808.0 | 1.48 |
| | 470 | E36D551HPN471MC79M | 2.000 × 3.125 | C79 | 565.0 | 1.89 |
| | 560 | E36D551HPN561MC92M | 2.000 × 3.625 | C92 | 472.0 | 2.21 |
| | 680 | E36D551HPN681MCA5M | 2.000 × 4.125 | CA5 | 388.0 | 2.58 |
| | 820 | E36D551HPN821MCB7M | 2.000 × 4.625 | CB7 | 322.0 | 2.97 |
| | 1,000 | E36D551HPN102MCE3M | 2.000 × 5.625 | CE3 | 263.0 | 3.59 |
| | 680 | E36D551HPN681MD79M | 2.500 × 3.125 | D79 | 391.0 | 2.59 |
| | 1,000 | E36D551HPN102MDA5M | 2.500 × 4.125 | DA5 | 265.0 | 3.89 |
| | 1,200 | E36D551HPN122MDB7M | 2.500 × 4.625 | DB7 | 220.0 | 4.56 |
| | 1,500 | E36D551HPN152MDE3M | 2.500 × 5.625 | DE3 | 176.0 | 5.46 |
| | 1,200 | E36D551HPN122ME92M | 3.000 × 3.625 | E92 | 222.0 | 4.06 |
| | 1,500 | E36D551HPN152MEA5M | 3.000 × 4.125 | EA5 | 178.0 | 4.79 |
| | 1,800 | E36D551HPN182MEB7M | 3.000 × 4.625 | EB7 | 148.0 | 5.50 |
| | 2,200 | E36D551HPN222MED0M | 3.000 × 5.125 | ED0 | 121.0 | 6.36 |
| | 3,900 | E36D551HPN392MEN0M | 3.000 × 8.625 | EN0 | 69.0 | 10.71 |
| | 1,800 | E36D551LLN182MFA5M | 3.500 × 4.125 | FA5 | 159.0 | 5.11 |
| | 2,200 | E36D551LLN222MFB7M | 3.500 × 4.625 | FB7 | 130.0 | 6.06 |
| | 2,700 | E36D551LLN272MFD0M | 3.500 × 5.125 | FD0 | 107.0 | 6.81 |
| | 3,300 | E36D551LLN332MFE3M | 3.500 × 5.625 | FE3 | 88.0 | 7.76 |

**†For terminal, mounting and construction options, refer to the part numbering system for descriptions and codes.**
*** Refer to diagram of dimensions for detailed case size specifications.**