650ES001
Dummy Stowage Receptacle - Threaded and Bayonet
MIL-C-26500 and MIL-C-83723 Series III

MIL-C-26500

MIL-C-83723 Series III Threaded and Bayonet

650ES001 B 16

- Basic Part No. — 650ES001, 650ES002
- Finish (Table II)
- Shell Size

650ES001

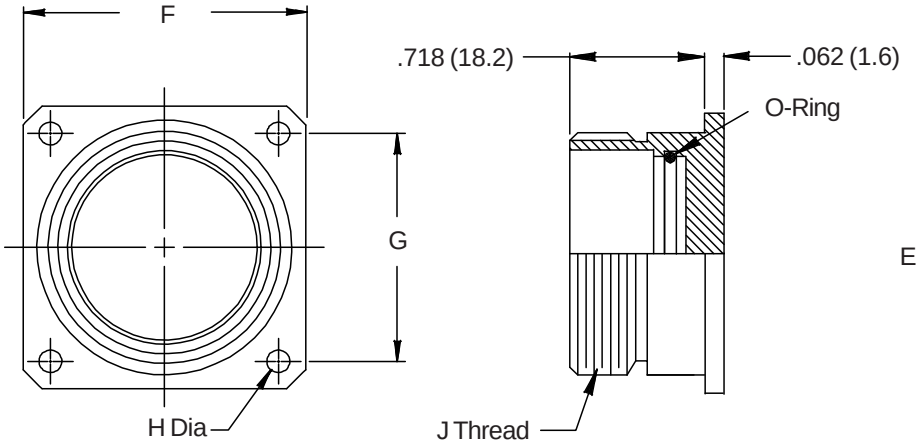

650ES002

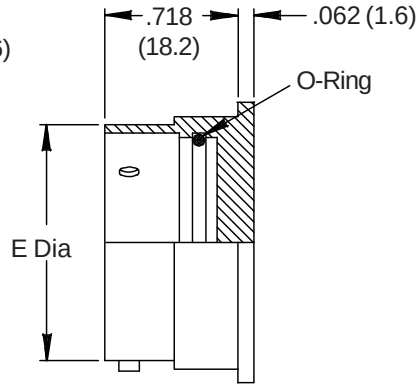

See inside back cover fold-out or page 14 for Table II.

TABLE III: DIMENSIONS

Shell Size	Shell Size Mil. Ref. *	E Dia		F		G		H Dia		J Thread
08	7	.536	(13.6)	.812	(20.6)	.594	(15.1)	.125	(3.2)	9/16 - 24 UNEF
10	1	.659	(16.7)	.937	(23.8)	.719	(18.3)	.125	(3.2)	11/16 - 24 UNEF
12	2	.829	(21.1)	1.031	(26.2)	.812	(20.6)	.125	(3.2)	7/8 - 20 UNEF
14	3	.898	(22.8)	1.125	(28.6)	.906	(23.0)	.125	(3.2)	15/16 - 20 UNEF
16	4	1.025	(26.0)	1.250	(31.8)	.969	(24.6)	.125	(3.2)	1 1/16 - 18 UNEF
18	5	1.131	(28.7)	1.343	(34.1)	1.062	(27.0)	.125	(3.2)	1 3/16 - 18 UNEF
20	8	1.256	(31.9)	1.437	(36.5)	1.156	(29.4)	.125	(3.2)	1 5/16 - 18 UNEF
22	6	1.381	(35.1)	1.562	(39.7)	1.250	(31.8)	.125	(3.2)	1 7/16 - 18 UNEF
24	9	1.506	(38.3)	1.703	(43.3)	1.375	(34.9)	.154	(3.9)	1 9/16 - 18 UNEF

* MS27296 and MS27297

Metric dimensions (mm) are indicated in parentheses.

© 2005 Glenair, Inc. CAGE Code 06324 Printed in U.S.A.