Part Number: 0351550204
Status: Active
Description: 2.50mm Pitch Wire-to-Board Housing, Positive Lock, Blue, 2 Circuits

Documents:
3D Model
Drawing (PDF)
Product Specification PS-35155-001 (PDF)
Product Specification PS-35155-002 (PDF)
Product Specification PS-68143-001 (PDF)
Packaging Specification PK-35155-001 (PDF)
RoHS Certificate of Compliance (PDF)

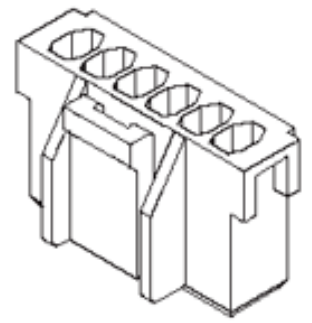

Series image - Reference only

Agency Certification

CSA	LR19980
UL	E29179

General

Product Family	Crimp Housings
Series	35155
Application	Signal, Wire-to-Wire
Product Name	N/A
UPC	800756183695

Physical

Breakaway	No
Circuits (maximum)	2
Flammability	94V-0
Gender	Female
Glow-Wire Compliant	No
Keying to Mating Part	None
Lock to Mating Part	Yes
Number of Rows	1
Packaging Type	Bag
Panel Mount	No
Pitch - Mating Interface	2.50mm
Pitch - Termination Interface	2.50mm
Temperature Range - Operating	-40°C to +105°C

Material Info

Reference - Drawing Numbers

Packaging Specification	PK-35155-001
Product Specification	PS-35155-001, PS-35155-002, PS-68143-001
Sales Drawing	SD-35155-**0*

EU ELV
Not Relevant

EU RoHS
Compliant

China RoHS

REACH SVHC
Contains SVHC(2015 June 15): No

Halogen-Free Status
Not Low-Halogen

Need more information on product environmental compliance?

Email productcompliance@molex.com
Please visit the Contact Us section for any non-product compliance questions.

China ROHS	Green Image
ELV	Not Relevant

Search Parts in this Series
35155 Series

Mates With
35312 Vertical Shrouded Header, 35184 Wire-to-Wire Plug Housing

Use With
5103 SPOX™ Crimp Terminal