Mallory Sonalert Products, Inc.

Part #: **JT028-R-CDL**

Sales Outline Drawing

Revision: **C**

Specifications:

Stack Number:	1				
LED Color:	RED				
Connection Wires:	Red and Brown				
LED Current Draw:	<50 mA				
Rated Voltage:	24 VAC/DC				
Operating Voltage:	20-28 VAC/DC				
Sound Level Category:	Loud	Loud	Loud	Loud	
Mode of Operation:	Continuous	Medium Pulse (5PPS)	Double Pulse (0.5PPS)	Continuous for 5 sec then 0.1s beep until reset	
Connection:	Black and Gray Wires	Black and Gray Wires; Orange wire connected to	Black and Gray Wires; Purple wire connected to Green/Yellow wire	Black and Gray wires; Orange and Purple wires connected to Green/Yellow wire	
Sound Current Draw:	40mA Max.	40mA Max.	40mA Max.	40mA Max.	
Loudness @ 1m:	80-85 dB(A) Typ.				
Frequency:	2000 ± 500 Hz				
Total Max Current:	<90mA with all LED's and sound unit working				
Operating Temperature:	-25° ~ +60°C				
Lens Color:	Opaque White				
Material:	ABS FR15U				
Mounting Method:	Direct Mount using 1/2" NPT Stainless Steel Pipe and Nut				
Weight Typical (g):	270				
NEMA 12:	Approved				
Options:	Please contact factory.				

Dimensions: Inches (mm)

cUL Recognized

PATENT NUMBER 10309594

ROHS Compliant

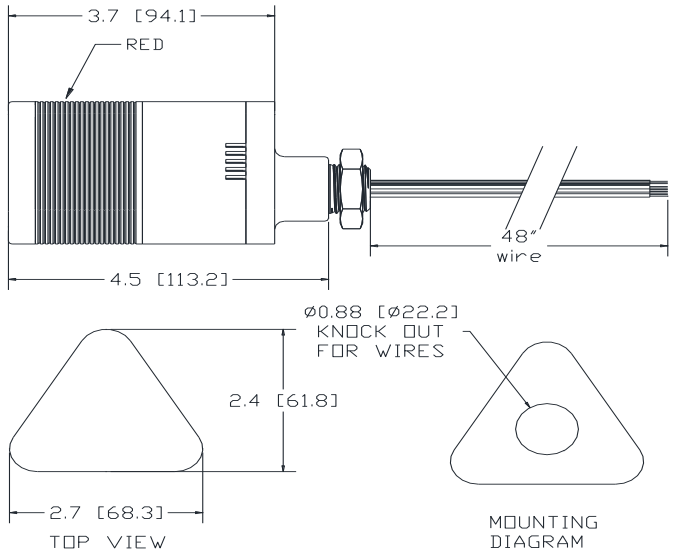

LED OPERATION:	CONNECT STACK COLOR WIRE TO POWER AND BROWN WIRE TO POWER.
SOUND OPERATION:	CONNECT GRAY AND BLACK WIRES TO POWER FOR CONTINUOUS SOUND.
	FOR MEDIUM PULSE, CONNECT GRAY & BLACK TO POWER AND ORANGE WIRE TO GREEN/YELLOW WIRE.
	FOR DOUBLE PULSE, CONNECT GRAY & BLACK TO POWER AND PURPLE WIRE TO GREEN/YELLOW WIRE.
	FOR CONT/BEEP, CONNECT GRAY & BLACK TO POWER AND ORANGE & PURPLE TO GREEN/YELLOW WIRE.

4411 South High School Road, Indianapolis, Indiana 46241 U.S.A · Phone: (317) 612-1000 Fax: (317) 612-1010 www.mspindy.com