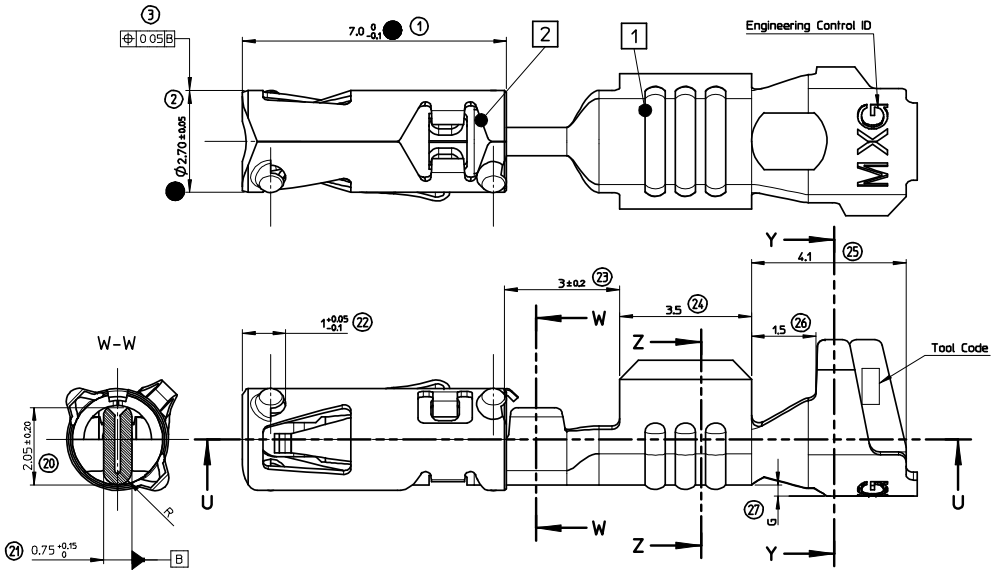

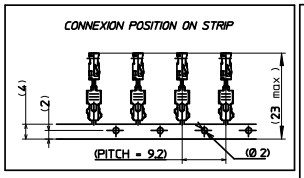

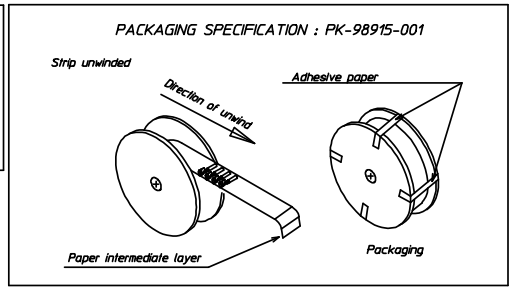

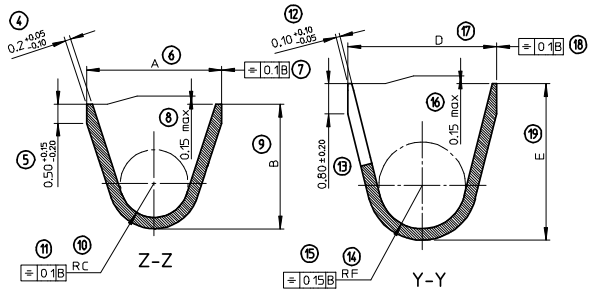

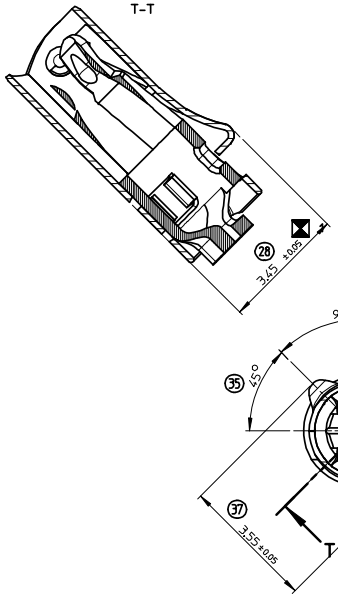

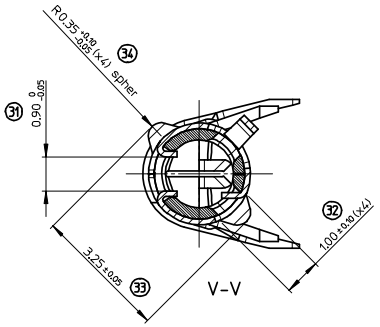

NOTE:

- CRIMPING SPECIFICATION ACCORDING TO CS-64323-001

MARK	DESIGNATION	MATERIAL
2	BOX TERMINAL	STAINLESS STEEL thickness : 0.15 mm
1	BODY TERMINAL	HIGH CONDUCTIVITY COPPER ALLOY thickness : 0.3 mm

MATERIAL NUMBER	PLATING: CONTACT AREA	PLATING: CRIMPING AREA	PLATING: UNDERLAYER	CRIMPING RANGE (mm2)	A±0.3	B±0.3	rC±0.2	D±0.3	E±0.3	rF±0.2	G ±0.1	WEIGHT (g)
0643231029	Sn	Sn		0.50 TO 1	3.1	2.8	0.575	3.25	3.45	0.95	0.15	0.2420
0643231319	Au 1.27µ MINI	Sn	Ni									0.2442
0643231039	Sn	Sn		>1 TO 2	3.7	3.3	0.9	3.95	4.15	1.15	0.3	0.2580
0643231219	Au 1.27µ MINI	Sn	Ni									0.2602

(SKC) COTES CARACTERISTIQUES SPECIALES
SPECIAL KEY CHARACTERISTICS
INDICATION DIMENSIONS S.P.C
DENOTES S.P.C DIMENSIONS
INDICATION DIMENSIONS CRITIQUES
DENOTES CRITICAL DIMENSIONS
INDICATION DIMENSIONS FONCTIONNELLES
DENOTES FUNCTIONAL DIMENSIONS

QUANTITE PAR FEUILLE INDIVIDUELLE
QUANTITY PER INDIVIDUAL SHEET
1 0 4 (SKC) 0

REV	DESCRIPTION	DATE
C	Revised Dwg EC NO: G2008-0440	2008/05/19
	DRWN: J.ULOU	2008/05/19
	CHKD: FPAROLARI	2008/05/19
	APPR: LSTICKEIR	2008/05/19

GENERAL TOLERANCES (UNLESS SPECIFIED)

	mm	INCH
4 PLACES	± ---	± ---
3 PLACES	± ---	± ---
2 PLACES	± 0.10	± ---
1 PLACE	± 0.1	± ---
ANGULAR	± 2 °	

DRAFT WHERE APPLICABLE MUST REMAIN WITHIN DIMENSIONS

DIMENSION STYLE: MM ONLY	SCALE: 15:1	DESIGN UNITS: METRIC	FIRST ANGLE PROJECTION
DRAWN BY: VGUERIN	DATE: 2007/11/07	TITLE: CP RCPT TRM 1.5	
CHECKED BY: FPAROLARI	DATE: 2007/11/07		
APPROVED BY: LSTICKEIR	DATE: 2007/11/07	MOLEX INCORPORATED	
MATERIAL NO.: SEE CHART		DOCUMENT NO: SD-64323-001	SHEET NO.: 1 OF 1
SIZE: A1	THIS DRAWING CONTAINS INFORMATION THAT IS PROPRIETARY TO MOLEX INCORPORATED AND SHOULD NOT BE USED WITHOUT WRITTEN PERMISSION		

tb_frame_A1_P_AM_F
Rev. E 2006/04/15