AS85049/10 and MS3437A
Straight EMI/RFI Environmental Backshell

Glenair®

CONNECTOR DESIGNATOR:	
A	AS50151 Series AS34001 MIL-DTL-26482 Series II AS81703 Series III MIL-DTL-83723 Series I & III 40M39569, DEF 5326-3, EN 2997 EN 3646, ESC 10, ESC 11, LN 29504 NFC93422 Series HE302 PAN 6432-1, PAN 6432-2, PATT 602

Basic Part Number		Dash Number (Table II)	
M85049/10	-	21	W

Finish / Material

B = Black Cadmium / Stainless Steel
N = Electroless Nickel / Aluminum
S = Passivated / Stainless Steel
W = 1,000 Hr. Cadmium Olive Drab over Electroless Nickel / Aluminum
X = Aluminum, Nickel Fluorocarbon Polymer
Z = Aluminum, Zinc-Nickel, Black
XS = Stainless Steel, Nickel Flurocarbon Polymer
ZS = Stainless Steel, Zinc-Nickel, Black

Superseded Part Number

MS3437A 21 C

Basic Part No. — Dash No.

Finish
(Material is Aluminum Only)

A = Cadmium Olive Drab over Nickel
C = Cadmium Olive Drab
N = Electroless Nickel

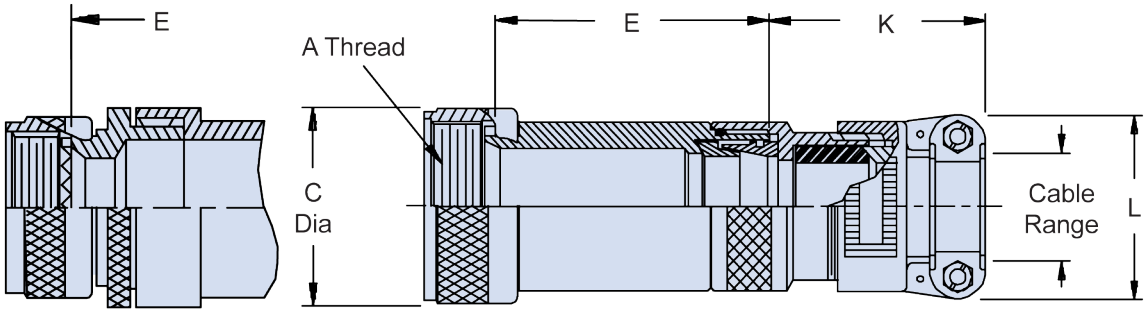

STYLE 2 STYLE 1

TABLE I: Shell Size and Dimensions

Shell Size	A Thread Class 2B	C Dia Max
3	.562 - 24 UNEF	.67 (17.0)
8	.500 - 20 UNF	.62 (15.7)
10	.625 - 24 UNEF	.73 (18.5)
12	.750 - 20 UNEF	.86 (21.8)
14	.875 - 20 UNEF	.98 (24.9)
16	1.000 - 20 UNEF	1.11 (28.2)
18	1.062 - 18 UNEF	1.22 (31.0)
20	1.188 - 18 UNEF	1.34 (34.0)
22	1.313 - 18 UNEF	1.47 (37.3)
24	1.438 - 18 UNEF	1.59 (40.4)
28	1.750 - 18 UNS	1.97 (50.0)
32	2.000 - 18 UNS	2.22 (56.4)
36	2.250 - 16 UN	2.47 (62.7)
40	2.500 - 16 UN	2.72 (69.1)
44	2.750 - 16 UN	2.97 (75.4)
48	3.000 - 16 UN	3.22 (81.8)
61	1.500 - 18 UNEF	1.65 (41.9)

APPLICATION NOTES

1. For complete dimensions see the applicable Military Specification.
2. Metric dimensions (mm) are in parentheses.
3. Cable Range is defined as the accommodation range for the wire bundle or cable. Dimensions shown are not intended for inspection criteria.

Dimensions in inches (millimeters) and are subject to change without notice.

© 2013 Glenair, Inc. U.S. CAGE Code 06324 Printed in U.S.A.

AS85049/10 and MS3437A
Straight EMI/RFI Environmental Backshell

TABLE II: Dash No., Style, Shell Size, Dimensions and Cable Range

Dash No.	Shell Size	Style	E Max	K Ref	L Max	Cable Range Min	Cable Range Max	M85049/42 Ref.
01	3	1	2.125 (54.0)	1.544 (39.2)	.957 (24.3)	.125 (3.2)	.250 (6.4)	4
02	3	1	3.125 (79.4)	1.544 (39.2)	.957 (24.3)	.125 (3.2)	.250 (6.4)	4
03	3	2	2.875 (73.0)	1.544 (39.2)	1.145 (29.1)	.250 (6.4)	.437 (11.1)	6
04	3	2	3.875 (98.4)	1.544 (39.2)	1.145 (29.1)	.250 (6.4)	.437 (11.1)	6
05	8	1	2.125 (54.0)	1.544 (39.2)	.957 (24.3)	.125 (3.2)	.250 (6.4)	4
06	8	1	3.125 (79.4)	1.544 (39.2)	.957 (24.3)	.125 (3.2)	.250 (6.4)	4
07	8	2	2.875 (73.0)	1.544 (39.2)	1.145 (29.1)	.250 (6.4)	.437 (11.1)	6
08	8	2	3.875 (98.4)	1.544 (39.2)	1.145 (29.1)	.250 (6.4)	.437 (11.1)	6
09	10	1	2.125 (54.0)	1.544 (39.2)	.957 (24.3)	.125 (3.2)	.312 (7.9)	4
10	10	1	3.125 (79.4)	1.544 (39.2)	.957 (24.3)	.125 (3.2)	.312 (7.9)	4
11	10	2	2.875 (73.0)	1.544 (39.2)	1.145 (29.1)	.250 (6.4)	.437 (11.1)	6
12	10	2	3.875 (98.4)	1.544 (39.2)	1.145 (29.1)	.250 (6.4)	.437 (11.1)	6
13	12	1	2.125 (54.0)	1.544 (39.2)	1.145 (29.1)	.250 (6.4)	.437 (11.1)	6
14	12	1	3.125 (79.4)	1.544 (39.2)	1.145 (29.1)	.250 (6.4)	.437 (11.1)	6
15	12	2	2.875 (73.0)	1.844 (46.8)	1.332 (33.8)	.350 (8.9)	.625 (15.9)	10
16	12	2	3.875 (98.4)	1.844 (46.8)	1.332 (33.8)	.350 (8.9)	.625 (15.9)	10
17	14	1	2.125 (54.0)	1.844 (46.8)	1.332 (33.8)	.350 (8.9)	.575 (14.6)	10
18	14	1	3.125 (79.4)	1.844 (46.8)	1.332 (33.8)	.350 (8.9)	.575 (14.6)	10
19	14	2	2.875 (73.0)	1.916 (48.7)	1.551 (39.4)	.500 (12.7)	.750 (19.1)	12
20	14	2	3.875 (98.4)	1.916 (48.7)	1.551 (39.4)	.500 (12.7)	.750 (19.1)	12
21	16	1	2.125 (54.0)	1.916 (48.7)	1.551 (39.4)	.500 (12.7)	.700 (17.8)	12
22	16	1	3.125 (79.4)	1.916 (48.7)	1.551 (39.4)	.500 (12.7)	.700 (17.8)	12
23	16	2	2.875 (73.0)	2.000 (50.8)	1.770 (45.0)	.625 (15.9)	.937 (23.8)	16
24	16	2	3.875 (98.4)	2.000 (50.8)	1.770 (45.0)	.625 (15.9)	.937 (23.8)	16
25	18	1	2.125 (54.0)	1.844 (46.8)	1.332 (33.8)	.350 (8.9)	.625 (15.9)	10
26	18	1	3.125 (79.4)	1.844 (46.8)	1.332 (33.8)	.350 (8.9)	.625 (15.9)	10
27	18	1	2.125 (54.0)	1.916 (48.7)	1.551 (39.4)	.500 (12.7)	.750 (19.1)	12
28	18	1	3.125 (79.4)	1.916 (48.7)	1.551 (39.4)	.500 (12.7)	.750 (19.1)	12
29	18	2	2.875 (73.0)	2.000 (50.8)	1.770 (45.0)	.625 (15.9)	.937 (23.8)	16
30	18	2	3.875 (98.4)	2.000 (50.8)	1.770 (45.0)	.625 (15.9)	.937 (23.8)	16
31	20	1	3.125 (79.4)	1.844 (46.8)	1.332 (33.8)	.350 (8.9)	.625 (15.9)	10
32	20	1	4.125 (104.8)	1.844 (46.8)	1.332 (33.8)	.350 (8.9)	.625 (15.9)	10
33	20	1	3.125 (79.4)	1.916 (48.7)	1.551 (39.4)	.500 (12.7)	.750 (19.1)	12
34	20	1	4.125 (104.8)	1.916 (48.7)	1.551 (39.4)	.500 (12.7)	.750 (19.1)	12
35	20	2	3.875 (98.4)	2.000 (50.8)	1.770 (45.0)	.625 (15.9)	.937 (23.8)	16
36	20	2	4.875 (123.8)	2.000 (50.8)	1.770 (45.0)	.625 (15.9)	.937 (23.8)	16
37	20	2	3.875 (98.4)	2.230 (56.6)	2.113 (53.7)	.875 (22.2)	1.250 (31.8)	20
38	20	2	4.875 (123.8)	2.230 (56.6)	2.113 (53.7)	.875 (22.2)	1.250 (31.8)	20
39	22	1	3.125 (79.4)	1.844 (46.8)	1.332 (33.8)	.350 (8.9)	.625 (15.9)	10
40	22	1	4.125 (104.8)	1.844 (46.8)	1.332 (33.8)	.350 (8.9)	.625 (15.9)	10
41	22	1	3.125 (79.4)	1.916 (48.7)	1.551 (39.4)	.500 (12.7)	.750 (19.1)	12
42	22	1	4.125 (104.8)	1.916 (48.7)	1.551 (39.4)	.500 (12.7)	.750 (19.1)	12
43	22	1	3.125 (79.4)	2.000 (50.8)	1.770 (45.0)	.625 (15.9)	.937 (23.8)	16
44	22	1	4.125 (104.8)	2.000 (50.8)	1.770 (45.0)	.625 (15.9)	.937 (23.8)	16
45	22	2	3.875 (98.4)	2.230 (56.6)	2.113 (53.7)	.875 (22.2)	1.250 (31.8)	20
46	22	2	4.875 (123.8)	2.230 (56.6)	2.113 (53.7)	.875 (22.2)	1.250 (31.8)	20
47	24	1	3.125 (79.4)	1.916 (48.7)	1.551 (39.4)	.500 (12.7)	.750 (19.1)	12
48	24	1	4.125 (104.8)	1.916 (48.7)	1.551 (39.4)	.500 (12.7)	.750 (19.1)	12
49	24	1	3.125 (79.4)	2.000 (50.8)	1.770 (45.0)	.625 (15.9)	.812 (20.6)	16
50	24	1	4.125 (104.8)	2.000 (50.8)	1.770 (45.0)	.625 (15.9)	.812 (20.6)	16
51	24	1	3.125 (79.4)	2.000 (50.8)	1.770 (45.0)	.625 (15.9)	.937 (23.8)	16
52	24	1	4.125 (104.8)	2.000 (50.8)	1.770 (45.0)	.625 (15.9)	.937 (23.8)	16

Continued on Page B-29

Dimensions in inches (millimeters) and are subject to change without notice.

© 2013 Glenair, Inc.

U.S. CAGE Code 06324

Printed in U.S.A.

TABLE II: (Continued from Page B-28)								
Dash No.	Shell Size	Style	E Max	K Ref	L Max	Cable Range Min	Cable Range Max	M85049/42 Ref.
53	24	2	3.875 (98.4)	2.230 (56.6)	2.113 (53.7)	.875 (22.2)	1.250 (31.8)	20
54	24	2	4.875 (123.8)	2.230 (56.6)	2.113 (53.7)	.875 (22.2)	1.250 (31.8)	20
55	28	1	3.125 (79.4)	1.916 (48.7)	1.551 (39.4)	.500 (12.7)	.750 (19.1)	12
56	28	1	4.125 (104.8)	1.916 (48.7)	1.551 (39.4)	.500 (12.7)	.750 (19.1)	12
57	28	1	3.125 (79.4)	2.000 (50.8)	1.770 (45.0)	.625 (15.9)	.937 (23.8)	16
58	28	1	4.125 (104.8)	2.000 (50.8)	1.770 (45.0)	.625 (15.9)	.937 (23.8)	16
59	28	1	3.125 (79.4)	2.230 (56.6)	2.113 (53.7)	.875 (22.2)	1.250 (31.8)	20
60	28	1	4.125 (104.8)	2.230 (56.6)	2.113 (53.7)	.875 (22.2)	1.250 (31.8)	20
61	28	1	3.125 (79.4)	2.024 (51.4)	2.363 (60.0)	1.000 (25.4)	1.375 (34.9)	24
62	28	1	4.126 (104.8)	2.024 (51.4)	2.363 (60.0)	1.000 (25.4)	1.375 (34.9)	24
63	32	1	3.125 (79.4)	2.000 (50.8)	1.770 (45.0)	.625 (15.9)	.937 (23.8)	16
64	32	1	4.125 (104.8)	2.000 (50.8)	1.770 (45.0)	.625 (15.9)	.937 (23.8)	16
65	32	1	3.125 (79.4)	2.230 (56.6)	2.113 (53.7)	.875 (22.2)	1.250 (31.8)	20
66	32	1	4.125 (104.8)	2.230 (56.6)	2.113 (53.7)	.875 (22.2)	1.250 (31.8)	20
67	32	1	3.125 (79.4)	2.024 (51.4)	2.363 (60.0)	1.000 (25.4)	1.375 (34.9)	24
68	32	1	4.125 (104.8)	2.024 (51.4)	2.363 (60.0)	1.000 (25.4)	1.375 (34.9)	24
69	32	1	3.125 (79.4)	2.550 (64.8)	2.770 (70.4)	1.250 (31.8)	1.625 (41.3)	28
70	32	1	4.125 (104.8)	2.550 (64.8)	2.770 (70.4)	1.250 (31.8)	1.625 (41.3)	28
71	36	1	4.125 (104.8)	2.230 (56.6)	2.113 (53.7)	.875 (22.2)	1.250 (31.8)	20
72	36	1	5.125 (130.2)	2.230 (56.6)	2.113 (53.7)	.875 (22.2)	1.250 (31.8)	20
73	36	1	4.125 (104.8)	2.024 (51.4)	2.363 (60.0)	1.000 (25.4)	1.375 (34.9)	24
74	36	1	5.125 (130.2)	2.024 (51.4)	2.363 (60.0)	1.000 (25.4)	1.375 (34.9)	24
75	36	1	4.125 (104.8)	2.550 (64.8)	2.770 (70.4)	1.250 (31.8)	1.625 (41.3)	28
76	36	1	5.125 (130.2)	2.550 (64.8)	2.770 (70.4)	1.250 (31.8)	1.625 (41.3)	28
77	36	2	5.000 (127.0)	2.600 (66.0)	3.020 (76.7)	1.437 (36.5)	1.875 (47.6)	32
78	36	2	6.000 (152.4)	2.600 (66.0)	3.020 (76.7)	1.437 (36.5)	1.875 (47.6)	32
79	40	1	4.125 (104.8)	2.230 (56.6)	2.113 (53.7)	.875 (22.2)	1.250 (31.8)	20
80	40	1	5.125 (130.2)	2.230 (56.6)	2.113 (53.7)	.875 (22.2)	1.250 (31.8)	20
81	40	1	4.125 (104.8)	2.024 (51.4)	2.363 (60.0)	1.000 (25.4)	1.375 (34.9)	24
82	40	1	5.125 (130.2)	2.024 (51.4)	2.363 (60.0)	1.000 (25.4)	1.375 (34.9)	24
83	40	1	4.125 (104.8)	2.550 (64.8)	2.770 (70.4)	1.250 (31.8)	1.625 (41.3)	28
84	40	1	5.125 (130.2)	2.550 (64.8)	2.770 (70.4)	1.250 (31.8)	1.625 (41.3)	28
85	40	1	4.125 (104.8)	2.600 (66.0)	3.020 (76.7)	1.437 (36.5)	1.875 (47.6)	32
86	40	1	5.125 (130.2)	2.600 (66.0)	3.020 (76.7)	1.437 (36.5)	1.875 (47.6)	32
87	44	1	4.125 (104.8)	2.230 (56.6)	2.113 (53.7)	.875 (22.2)	1.250 (31.8)	20
88	44	1	5.125 (130.2)	2.230 (56.6)	2.113 (53.7)	.875 (22.2)	1.250 (31.8)	20
89	44	1	4.125 (104.8)	2.024 (51.4)	2.363 (60.0)	1.000 (25.4)	1.375 (34.9)	24
90	44	1	5.125 (130.2)	2.024 (51.4)	2.363 (60.0)	1.000 (25.4)	1.375 (34.9)	24
91	44	1	4.125 (104.8)	2.550 (64.8)	2.770 (70.4)	1.250 (31.8)	1.625 (41.3)	28
92	44	1	5.125 (130.2)	2.550 (64.8)	2.770 (70.4)	1.250 (31.8)	1.625 (41.3)	28
93	44	1	4.125 (104.8)	2.600 (66.0)	3.020 (76.7)	1.437 (36.5)	1.875 (47.6)	32
94	44	1	5.125 (130.2)	2.600 (66.0)	3.020 (76.7)	1.437 (36.5)	1.875 (47.6)	32
95	48	1	4.125 (104.8)	2.230 (56.6)	2.113 (53.7)	.875 (22.2)	1.250 (31.8)	20
96	48	1	5.125 (130.2)	2.230 (56.6)	2.113 (53.7)	.875 (22.2)	1.250 (31.8)	20
97	48	1	4.125 (104.8)	2.024 (51.4)	2.363 (60.0)	1.000 (25.4)	1.375 (34.9)	24
98	48	1	5.125 (130.2)	2.024 (51.4)	2.363 (60.0)	1.000 (25.4)	1.375 (34.9)	24
99	48	1	4.125 (104.8)	2.550 (64.8)	2.770 (70.4)	1.250 (31.8)	1.625 (41.3)	28
100	48	1	5.125 (130.2)	2.550 (64.8)	2.770 (70.4)	1.250 (31.8)	1.625 (41.3)	28
101	48	1	4.125 (104.8)	2.600 (66.0)	3.020 (76.7)	1.437 (36.5)	1.875 (47.6)	32
102	48	1	5.125 (130.2)	2.600 (66.0)	3.020 (76.7)	1.437 (36.5)	1.875 (47.6)	32
103	61	1	3.125 (79.4)	1.916 (48.7)	1.551 (39.4)	.500 (12.7)	.750 (19.1)	12
104	61	1	4.125 (104.8)	1.916 (48.7)	1.551 (39.4)	.500 (12.7)	.750 (19.1)	12

Continued on Page B-30

Dimensions in inches (millimeters) and are subject to change without notice.

© 2013 Glenair, Inc.
U.S. CAGE Code 06324
Printed in U.S.A.

AS85049/10 and MS3437A
Straight EMI/RFI Environmental Backshell

TABLE II: (Continued from Page B-29								
Dash No.	Shell Size	Style	E Max	K Ref	L Max	Cable Range Min	Cable Range Max	M85049/42 Ref.
105	61	1	3.125 (79.4)	2.000 (50.8)	1.770 (45.0)	.625 (15.9)	.937 (23.8)	16
106	61	1	4.125 (104.8)	2.000 (50.8)	1.770 (45.0)	.625 (15.9)	.937 (23.8)	16
107	61	2	3.875 (98.4)	2.230 (56.6)	2.113 (53.7)	.875 (22.2)	1.250 (31.8)	20
108	61	2	4.875 (123.8)	2.230 (56.6)	2.113 (53.7)	.875 (22.2)	1.250 (31.8)	20
109	61	2	3.875 (98.4)	2.024 (51.4)	2.363 (60.0)	1.000 (25.4)	1.375 (34.9)	24
110	61	2	4.875 (123.8)	2.024 (51.4)	2.363 (60.0)	1.000 (25.4)	1.375 (34.9)	24
111	12	1	2.125 (54.0)	1.844 (46.8)	1.332 (33.8)	.350 (8.9)	.500 (12.7)	10
112	16	1	2.125 (54.0)	1.544 (39.2)	1.145 (29.1)	.250 (6.4)	.437 (11.1)	6
113	16	1	3.125 (79.4)	1.544 (39.2)	1.145 (29.1)	.250 (6.4)	.437 (11.1)	6
114	12	1	2.125 (54.0)	1.544 (39.2)	.957 (24.3)	.125 (3.2)	.312 (7.9)	4
115	12	1	3.125 (79.4)	1.544 (39.2)	.957 (24.3)	.125 (3.2)	.312 (7.9)	4
116	14	1	2.125 (54.0)	1.544 (39.2)	1.145 (29.1)	.250 (6.4)	.437 (11.1)	6
117	14	1	3.125 (79.4)	1.544 (39.2)	1.145 (29.1)	.250 (6.4)	.437 (11.1)	6
118	16	1	2.125 (54.0)	1.844 (46.8)	1.332 (33.8)	.350 (8.9)	.625 (15.9)	10
119	16	1	3.125 (79.4)	1.844 (46.8)	1.332 (33.8)	.350 (8.9)	.625 (15.9)	10
120	18	1	2.125 (54.0)	1.544 (39.2)	.957 (24.3)	.125 (3.2)	.312 (7.9)	4
121	18	1	3.125 (79.4)	1.544 (39.2)	.957 (24.3)	.125 (3.2)	.312 (7.9)	4
122	18	1	2.125 (54.0)	1.544 (39.2)	1.145 (29.1)	.250 (6.4)	.437 (11.1)	6
123	18	1	3.125 (79.4)	1.544 (39.2)	1.145 (29.1)	.250 (6.4)	.437 (11.1)	6
124	20	1	3.125 (79.4)	1.544 (39.2)	1.145 (29.1)	.250 (6.4)	.437 (11.1)	6
125	20	1	4.125 (104.8)	1.544 (39.2)	1.145 (29.1)	.250 (6.4)	.437 (11.1)	6
126	22	1	3.125 (79.4)	1.544 (39.2)	.957 (24.3)	.125 (3.2)	.312 (7.9)	4
127	22	1	4.125 (104.8)	1.544 (39.2)	.957 (24.3)	.125 (3.2)	.312 (7.9)	4
128	22	1	3.125 (79.4)	1.544 (39.2)	1.145 (29.1)	.250 (6.4)	.437 (11.1)	6
129	22	1	4.125 (104.8)	1.544 (39.2)	1.145 (29.1)	.250 (6.4)	.437 (11.1)	6
130	24	1	3.125 (79.4)	1.844 (46.8)	1.332 (33.8)	.350 (8.9)	.625 (15.9)	10
131	24	1	4.125 (104.8)	1.844 (46.8)	1.332 (33.8)	.350 (8.9)	.625 (15.9)	10
132	36	1	4.125 (104.8)	1.916 (48.7)	1.551 (39.4)	.500 (12.7)	.750 (19.1)	12
133	36	1	5.125 (130.2)	1.916 (48.7)	1.551 (39.4)	.500 (12.7)	.750 (19.1)	12
134	40	1	4.125 (104.8)	1.916 (48.7)	1.551 (39.4)	.500 (12.7)	.750 (19.1)	12
135	40	1	5.125 (130.2)	1.916 (48.7)	1.551 (39.4)	.500 (12.7)	.750 (19.1)	12
136	10	1	2.125 (54.0)	1.544 (39.2)	1.145 (29.1)	.250 (6.4)	.375 (9.5)	6
137	10	1	3.125 (79.4)	1.544 (39.2)	1.145 (29.1)	.250 (6.4)	.375 (9.5)	6
138	12	1	2.125 (54.0)	1.844 (46.8)	1.332 (33.8)	.350 (8.9)	.500 (12.7)	10
139	12	1	3.125 (79.4)	1.844 (46.8)	1.332 (33.8)	.350 (8.9)	.500 (12.7)	10
140	20	1	3.125 (79.4)	2.000 (50.8)	1.770 (45.0)	.625 (15.9)	.904 (23.0)	16
141	20	1	4.125 (104.8)	2.000 (50.8)	1.770 (45.0)	.625 (15.9)	.904 (23.0)	16
142	22	1	3.125 (79.4)	2.230 (56.6)	2.113 (53.7)	.875 (22.2)	1.029 (26.1)	20
143	22	1	4.125 (104.8)	2.230 (56.6)	2.113 (53.7)	.875 (22.2)	1.029 (26.1)	20
144	24	1	3.125 (79.4)	2.230 (56.6)	2.113 (53.7)	.875 (22.2)	1.144 (29.1)	20
145	24	1	4.125 (104.8)	2.230 (56.6)	2.113 (53.7)	.875 (22.2)	1.144 (29.1)	20
146	36	1	4.125 (104.8)	2.600 (66.0)	3.020 (76.7)	1.437 (36.5)	1.840 (46.7)	32
147	36	1	5.125 (130.2)	2.600 (66.0)	3.020 (76.7)	1.437 (36.5)	1.840 (46.7)	32
148	36	1	4.125 (104.8)	2.000 (50.8)	1.770 (45.0)	.625 (15.9)	.937 (23.8)	16
149	36	1	5.125 (130.2)	2.000 (50.8)	1.770 (45.0)	.625 (15.9)	.937 (23.8)	16
150	14	1	2.125 (54.0)	1.544 (39.2)	.957 (24.3)	.125 (3.2)	.312 (7.9)	4
151	14	1	3.125 (79.4)	1.544 (39.2)	.957 (24.3)	.125 (3.2)	.312 (7.9)	4
152	16	1	2.125 (54.0)	1.544 (39.2)	.957 (24.3)	.125 (3.2)	.312 (7.9)	4
153	16	1	3.125 (79.4)	1.544 (39.2)	.957 (24.3)	.125 (3.2)	.312 (7.9)	4
154	44	1	4.125 (104.8)	2.000 (50.8)	1.770 (45.0)	.625 (15.9)	.937 (23.8)	16
155	44	1	5.125 (130.2)	2.000 (50.8)	1.770 (45.0)	.625 (15.9)	.937 (23.8)	16
156	40	1	4.125 (104.8)	2.000 (50.8)	1.770 (45.0)	.625 (15.9)	.937 (23.8)	16
157	40	1	5.125 (130.2)	2.000 (50.8)	1.770 (45.0)	.625 (15.9)	.937 (23.8)	16

Dimensions in inches (millimeters) and are subject to change without notice.

© 2013 Glenair, Inc.
U.S. CAGE Code 06324
Printed in U.S.A.