Features

- Compliant with AEC-Q200 Rev-C - Stress Test Qualification for Passive Components in Automotive Applications
- Small footprint size (1210)
- Operating temperature range up to 125 °C
- Low thermal derating factor
- Higher hold currents at elevated temperatures
- RoHS compliant*
- Agency recognition:

MF-USHT Series - PTC Resettable Fuses

Electrical Characteristics

Model	V max. Volts	I max. Amps	I_{hold}	I_{trip}	Resistance		Max. Time To Trip		Tripped Power Dissipation
			Amperes at 23 °C		Ohms at 23 °C		Amperes at 23 °C	Seconds at 23 °C	Watts at 23 °C
			Hold	Trip	$R_{Min.}$	$R_{1Max.}$**			Typ.
MF-USHT035KX	30	20	0.35	1.75	0.4	2.2	8.0	0.1	1.0
MF-USHT050KX	30	20	0.50	2.50	0.3	1.6	8.0	0.1	1.0

**$R_{1Max.}$ measured 24 hours post reflow.

Environmental Characteristics

Operating Temperature..... -40 °C to +125 °C
Passive Aging..... +125 °C, 1000 hours..... $R_{final} < R_{1max}$
Humidity Aging..... +85 °C, 85 % R.H. 1000 hours ..... $R_{final} < R_{1max}$
Thermal Shock ..... +125 °C to -40 °C, 20 times..... $R_{final} < R_{1max}$
Solvent Resistance..... MIL-STD-202, Method 215 ..... No change
Vibration ..... MIL-STD-883C, Method 2007.1, Condition A..... No change
Moisture Sensitivity Level (MSL) ..... Level 1
ESD Classification - HBM..... Class 6

Test Procedures And Requirements For Model MF-USHT Series

Test	Test Conditions	Accept/Reject Criteria
Visual/Mech.	Verify dimensions and materials	Per MF physical description
Resistance	In still air @ 23 °C	$R_{min} \le R \le R_{1max}$
Time to Trip	At specified current, Vmax, 23 °C	T ≤ max. time to trip (seconds)
Hold Current	30 min. at I_{hold}	No trip
Trip Cycle Life	V_{max}, I_{max}, 100 cycles	No arcing or burning
Trip Endurance	V_{max}, 48 hours	No arcing or burning
Solderability	ANSI/J-STD-002	95 % min. coverage

cUL File Number..... E174545
http://www.ul.com/ Follow link to Online Certificates Directory, then enter UL File No. E174545, or click here

TÜV Certificate ..... Certificate Number Available on Request, or click here

Thermal Derating Chart - I_{hold} (Amps)

Model	Ambient Operating Temperature									
	-40 °C	-20 °C	0 °C	+23 °C	+40 °C	+50 °C	+60 °C	+70 °C	+85 °C	+125 °C
MF-USHT035KX	0.508	0.459	0.406	0.350	0.308	0.284	0.259	0.235	0.196	0.095
MF-USHT050KX	0.725	0.655	0.580	0.500	0.440	0.405	0.370	0.335	0.280	0.135

WARNING Cancer and Reproductive Harm - www.P65Warnings.ca.gov

*RoHS Directive 2002/95/EC Jan. 27, 2003 including annex and RoHS Recast 2011/65/EU June 8, 2011.
Specifications are subject to change without notice.
Users should verify actual device performance in their specific applications.
The products described herein and this document are subject to specific legal disclaimers as set forth on the last page of this document, and at www.bourns.com/docs/legal/disclaimer.pdf.

Applications

- Protection of automotive circuitry including engine control modules
- Overcurrent surge protection of electronic equipment required to operate at high operating temperature ranges
- Resettable fault protection for general electronic equipment

MF-USHT Series - PTC Resettable Fuses

BOURNS®

Product Dimensions

Model	A		B		C		D
	Min.	Max.	Min.	Max.	Min.	Max.	Min.
MF-USHT035X	3.00 (0.118)	3.43 (0.135)	2.35 (0.093)	2.80 (0.110)	0.40 (0.016)	0.85 (0.033)	0.30 (0.012)
MF-USHT050X	3.00 (0.118)	3.43 (0.135)	2.35 (0.093)	2.80 (0.110)	0.40 (0.016)	0.85 (0.033)	0.30 (0.012)

Packaging: 3000 pcs. per reel.

DIMENSIONS: MM (INCHES)

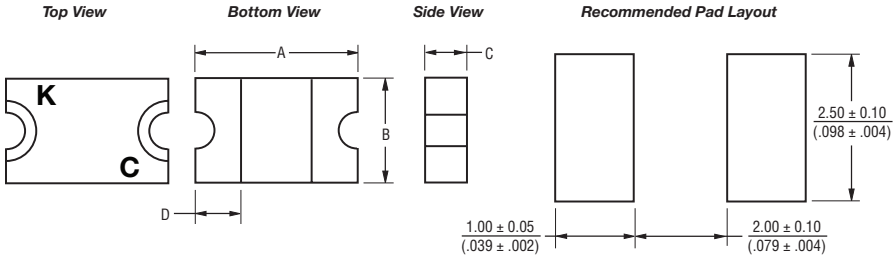

Terminal material:
Nickel/gold plated.

Termination pad solderability:
Standard Au finish:
Meets ANSI/J-STD-002 Category 2.

Recommended Storage:
40 °C max./70 % RH max.

Typical Time to Trip at 23 °C

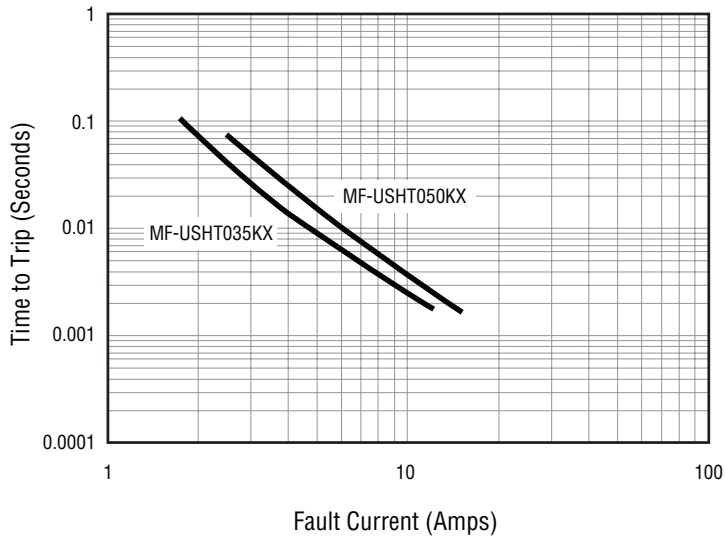

The Time to Trip curves represent typical performance of a device in a simulated application environment. Actual performance in specific customer applications may differ from these values due to the influence of other variables.

How to Order

MF - USHT 035 K X - 2

Multifuse® Product Designator

Series
USHT = 1210 High Temperature Surface Mount Component

Hold Current, I_{hold}
035 - 050 (0.35 - 0.50 Amps)

Material Specific Code

Multifuse® freeXpansion™ Design

Packaging
Packaged per EIA 481-1
-2 = Tape and Reel

Typical Part Marking

Represents total content. Layout may vary.

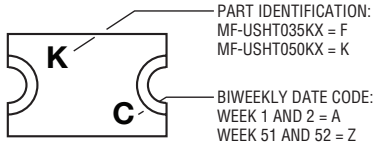

Specifications are subject to change without notice.
Users should verify actual device performance in their specific applications.
The products described herein and this document are subject to specific legal disclaimers as set forth on the last page of this document, and at www.bourns.com/docs/legal/disclaimer.pdf.

Solder Reflow Recommendations

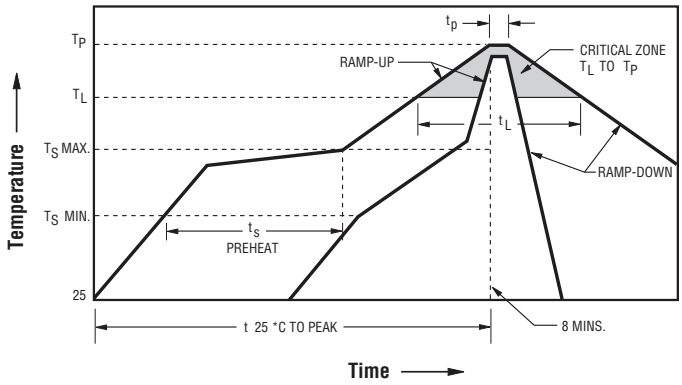

Notes:

- MF-USHT models cannot be wave soldered or hand soldered. Please contact Bourns for soldering recommendations.
- All temperatures refer to topside of the package, measured on the package body surface.
- If reflow temperatures exceed the recommended profile, devices may not meet the published specifications.
- Compatible with Pb and Pb-free solder reflow profiles.
- Excess solder may cause a short circuit, especially during hand soldering. Please refer to the Multifuse® Polymer PTC Soldering Recommendation guidelines.
- Designed for single solder reflow operations.

Profile Feature	Pb-Free Assembly
Average Ramp-Up Rate (TS_{max} to T_p)	3 °C / second max.
PREHEAT: Temperature Min. (TS_{min}) Temperature Max. (TS_{max}) Time (ts_{min} to ts_{max})	 150 °C 200 °C 60~180 seconds
TIME MAINTAINED ABOVE: Temperature (T_L) Time (t_L)	 217 °C 60~150 seconds
Peak / Classification Temperature (T_P)	260 °C
Time within 5 °C of Actual Peak Temperature (t_p)	20~40 seconds
Ramp-Down Rate	6 °C / second max.
Time within 25 °C to Peak Temperature	8 minutes max.

Asia-Pacific: Tel: +886-2 2562-4117 • Email: asiacus@bourns.com
EMEA: Tel: +36 88 520 390 • Email: eurocus@bourns.com
The Americas: Tel: +1-951 781-5500 • Email: americus@bourns.com
www.bourns.com

"freeXpansion Design" is a trademark of Bourns, Inc.
Specifications are subject to change without notice.
Users should verify actual device performance in their specific applications.
The products described herein and this document are subject to specific legal disclaimers as set forth on the last page of this document, and at www.bourns.com/docs/legal/disclaimer.pdf.

MF-USHT Series Tape and Reel Specifications

BOURNS®

Tape Dimensions	MF-USHT Series per EIA 481-1
W	8.0 ± 0.30 (0.315 ± 0.012)
P_0	4.0 ± 0.10 (0.157 ± 0.004)
P_1	4.0 ± 0.10 (0.157 ± 0.004)
P_2	2.0 ± 0.05 (0.079 ± 0.002)
A_0	3.00 ± 0.10 (0.118 ± 0.004)
B_0	3.65 ± 0.10 (0.144 ± 0.004)
B_1 max.	4.35 (0.171)
D_0	1.5 + 0.10/-0.0 (0.059 + 0.004/-0)
F	3.5 ± 0.05 (0.138 ± 0.002)
E_1	1.75 ± 0.10 (0.069 ± 0.004)
E_2 min.	6.25 (0.246)
T max.	0.6 (0.024)
T_1 max.	0.1 (0.004)
K_0	0.85 ± 0.10 (0.033 ± 0.004)
Leader min.	390 (15.35)
Trailer min.	160 (6.30)
Reel Dimensions	
A max.	185 (7.28)
N min.	50 (1.97)
W_1	8.4 + 1.5/-0.0 (0.331 + 0.059/-0.0)
W_2 max.	14.4 (0.567)

DIMENSIONS: MM (INCHES)

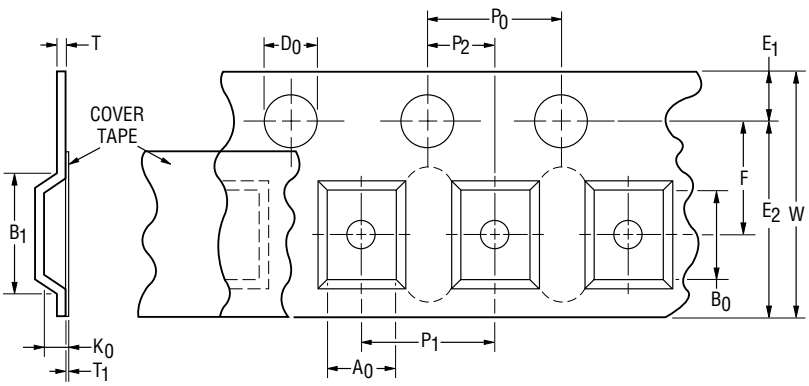

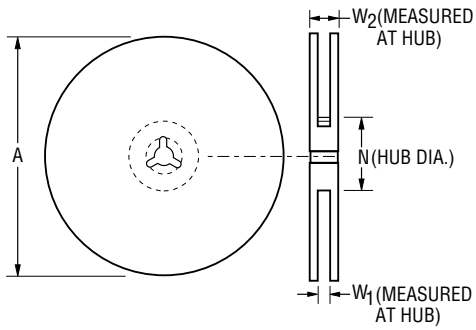

Specifications are subject to change without notice.
Users should verify actual device performance in their specific applications.
The products described herein and this document are subject to specific legal disclaimers as set forth on the last page of this document, and at www.bourns.com/docs/legal/disclaimer.pdf.

Application Notice

- Users are responsible for independent and adequate evaluation of Bourns® Multifuse® Polymer PTC devices in the user's application, including the PPTC device characteristics stated in the applicable data sheet.
- Polymer PTC devices must not be allowed to operate beyond their stated maximum ratings. Operation in excess of such maximum ratings could result in damage to the PTC device and possibly lead to electrical arcing and/or fire. Circuits with inductance may generate a voltage above the rated voltage of the polymer PTC device and should be thoroughly evaluated within the user's application during the PTC selection and qualification process.
- Polymer PTC devices are intended to protect against adverse effects of temporary overcurrent or overtemperature conditions up to rated limits and are not intended to serve as protective devices where overcurrent or overvoltage conditions are expected to be repetitive or prolonged.
- In normal operation, polymer PTC devices experience thermal expansion under fault conditions. Thus, a polymer PTC device must be protected against mechanical stress, and must be given adequate clearance within the user's application to accommodate such thermal expansion. Rigid potting materials or fixed housings or coverings that do not provide adequate clearance should be thoroughly examined and tested by the user, as they may result in the malfunction of polymer PTC devices if the thermal expansion is inhibited.
- Exposure to lubricants, silicon-based oils, solvents, gels, electrolytes, acids, and other related or similar materials may adversely affect the performance of polymer PTC devices.
- Aggressive solvents may adversely affect the performance of polymer PTC devices. Conformal coating, encapsulating, potting, molding, and sealing materials may contain aggressive solvents including but not limited to xylene and toluene, which are known to cause adverse effects on the performance of polymer PTCs. Such aggressive solvents must be thoroughly cured or baked to ensure their complete removal from polymer PTCs to minimize the possible adverse effect on the device.
- Recommended storage conditions should be followed at all times. Such conditions can be found on the applicable data sheet and on the Multifuse® Polymer PTC Moisture/Reflow Sensitivity Classification (MSL) note: https://www.bourns.com/docs/RoHS-MSL/msl_mf.pdf

Specifications are subject to change without notice.
Users should verify actual device performance in their specific applications.
The products described herein and this document are subject to specific legal disclaimers as set forth on the last page of this document, and at www.bourns.com/docs/legal/disclaimer.pdf.

Legal Disclaimer Notice

BOURNS®

This legal disclaimer applies to purchasers and users of Bourns® products manufactured by or on behalf of Bourns, Inc. and its affiliates (collectively, "Bourns").

Unless otherwise expressly indicated in writing, Bourns® products and data sheets relating thereto are subject to change without notice. Users should check for and obtain the latest relevant information and verify that such information is current and complete before placing orders for Bourns® products.

The characteristics and parameters of a Bourns® product set forth in its data sheet are based on laboratory conditions, and statements regarding the suitability of products for certain types of applications are based on Bourns' knowledge of typical requirements in generic applications. The characteristics and parameters of a Bourns® product in a user application may vary from the data sheet characteristics and parameters due to (i) the combination of the Bourns® product with other components in the user's application, or (ii) the environment of the user application itself. The characteristics and parameters of a Bourns® product also can and do vary in different applications and actual performance may vary over time. Users should always verify the actual performance of the Bourns® product in their specific devices and applications, and make their own independent judgments regarding the amount of additional test margin to design into their device or application to compensate for differences between laboratory and real world conditions.

Unless Bourns has explicitly designated an individual Bourns® product as meeting the requirements of a particular industry standard (e.g., ISO/TS 16949) or a particular qualification (e.g., UL listed or recognized), Bourns is not responsible for any failure of an individual Bourns® product to meet the requirements of such industry standard or particular qualification. Users of Bourns® products are responsible for ensuring compliance with safety-related requirements and standards applicable to their devices or applications.

Bourns® products are not recommended, authorized or intended for use in nuclear, lifesaving, life-critical or life-sustaining applications, nor in any other applications where failure or malfunction may result in personal injury, death, or severe property or environmental damage. Unless expressly and specifically approved in writing by two authorized Bourns representatives on a case-by-case basis, use of any Bourns® products in such unauthorized applications might not be safe and thus is at the user's sole risk. Life-critical applications include devices identified by the U.S. Food and Drug Administration as Class III devices and generally equivalent classifications outside of the United States.

Bourns expressly identifies those Bourns® standard products that are suitable for use in automotive applications on such products' data sheets in the section entitled "Applications." Unless expressly and specifically approved in writing by two authorized Bourns representatives on a case-by-case basis, use of any other Bourns® standard products in an automotive application might not be safe and thus is not recommended, authorized or intended and is at the user's sole risk. If Bourns expressly identifies a sub-category of automotive application in the data sheet for its standard products (such as infotainment or lighting), such identification means that Bourns has reviewed its standard product and has determined that if such Bourns® standard product is considered for potential use in automotive applications, it should only be used in such sub-category of automotive applications. Any reference to Bourns® standard product in the data sheet as compliant with the AEC-Q standard or "automotive grade" does not by itself mean that Bourns has approved such product for use in an automotive application.

Bourns® standard products are not tested to comply with United States Federal Aviation Administration standards generally or any other generally equivalent governmental organization standard applicable to products designed or manufactured for use in aircraft or space applications. Bourns expressly identifies Bourns® standard products that are suitable for use in aircraft or space applications on such products' data sheets in the section entitled "Applications." Unless expressly and specifically approved in writing by two authorized Bourns representatives on a case-by-case basis, use of any other Bourns® standard product in an aircraft or space application might not be safe and thus is not recommended, authorized or intended and is at the user's sole risk.

The use and level of testing applicable to Bourns® custom products shall be negotiated on a case-by-case basis by Bourns and the user for which such Bourns® custom products are specially designed. Absent a written agreement between Bourns and the user regarding the use and level of such testing, the above provisions applicable to Bourns® standard products shall also apply to such Bourns® custom products.

Users shall not sell, transfer, export or re-export any Bourns® products or technology for use in activities which involve the design, development, production, use or stockpiling of nuclear, chemical or biological weapons or missiles, nor shall they use Bourns® products or technology in any facility which engages in activities relating to such devices. The foregoing restrictions apply to all uses and applications that violate national or international prohibitions, including embargos or international regulations. Further, Bourns® products and Bourns technology and technical data may not under any circumstance be exported or re-exported to countries subject to international sanctions or embargoes. Bourns® products may not, without prior authorization from Bourns and/or the U.S. Government, be resold, transferred, or re-exported to any party not eligible to receive U.S. commodities, software, and technical data.

To the maximum extent permitted by applicable law, Bourns disclaims (i) any and all liability for special, punitive, consequential, incidental or indirect damages or lost revenues or lost profits, and (ii) any and all implied warranties, including implied warranties of fitness for particular purpose, non-infringement and merchantability.

For your convenience, copies of this Legal Disclaimer Notice with German, Spanish, Japanese, Traditional Chinese and Simplified Chinese bilingual versions are available at:

Web Page: http://www.bourns.com/legal/disclaimers-terms-and-policies

PDF: http://www.bourns.com/docs/Legal/disclaimer.pdf