Alle Rechte vorbehalten/ *All rights reserved*

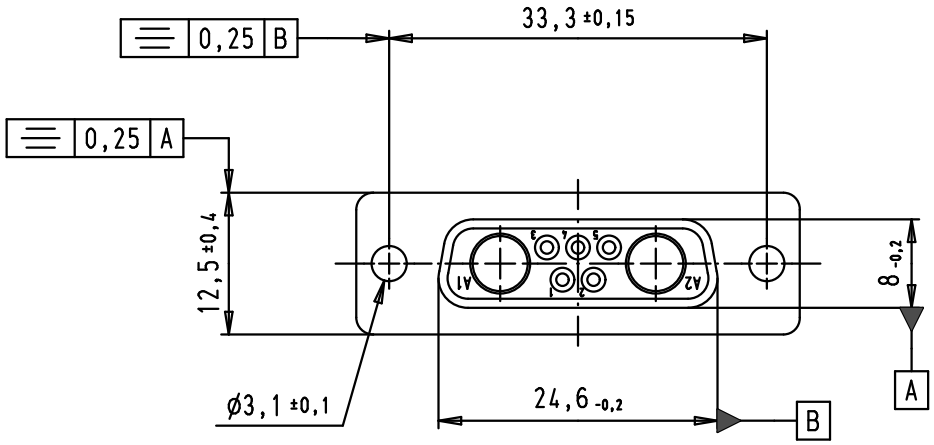

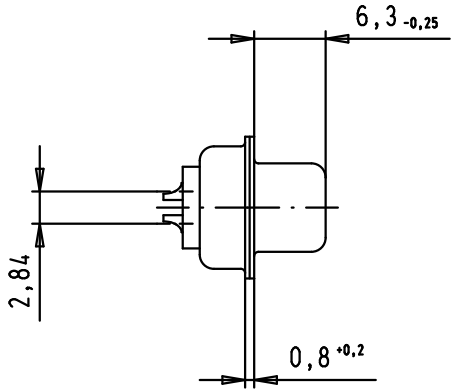

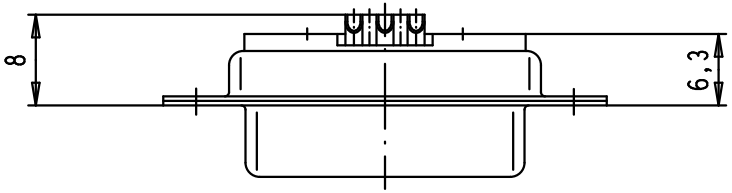

Solder bucket termination for AWG 20

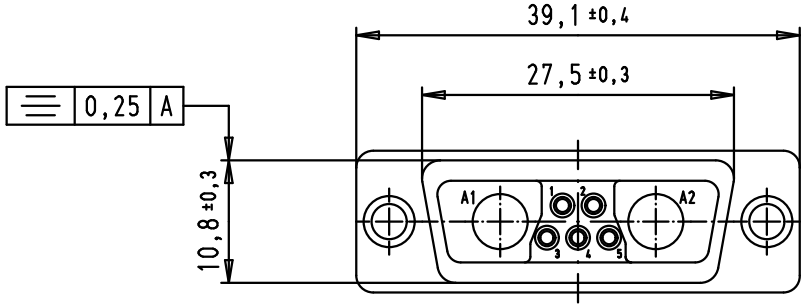

Part number	Performance level
09 69 201 7072	PL3
09 69 201 5072	S4

Mod.	Dat.	Name
EC01706	21/04/10	SC
34614	21/09/07	PK

	Dat.	Name
Detail.	21/09/07	PK
Insp.		
Stand.		

All Dim. in mm
Orig. Size DIN A 4

HARTING EURL
F-95972 Paris

D-Sub, 7W2, female, straight, solder buckets, tin plated shell

Maßstab/ *Scale* 1,5:1

TB 09 69 201 X072

Sub.

Blatt/ *Page* 1/1