400-001
TAG® Ring Backshell
with Strain Relief
Rotatable Coupling - Low Profile

CONNECTOR DESIGNATORS

A-F-H-L-S

ROTATABLE COUPLING

400 F S 001 M 16 06 L 6

- Product Series
- Connector Designator
- Angle and Profile
  - A = 90°
  - B = 45°
  - S = Straight
- Basic Part No.
- Finish (Table II)
- Shell Size (Table I)
- Cable Entry (Table IV, V)
- Strain Relief Style (F, G, L)
- Length: S only (1/2 inch increments: e.g. 6 = 3 inches)

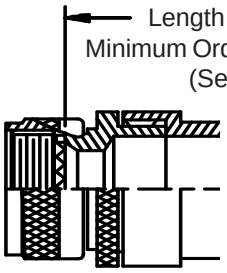

STYLE 2 (STRAIGHT See Note 1)

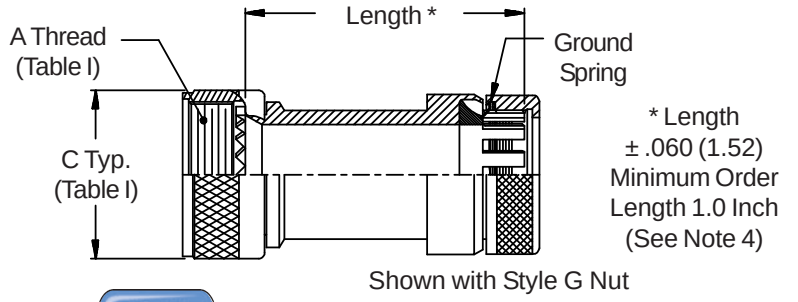

Shown with Style G Nut

-445 **Add "-445" to Specify Glenair's Non-Detent, ("NESTOR") Spring-Loaded, Self-Locking Coupling. See Page 41 for Details.**

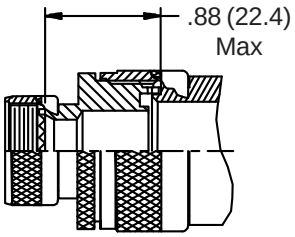

STYLE 2 (45° & 90° See Note 1)

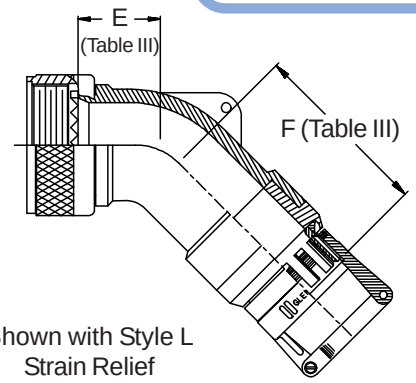

Shown with Style L Strain Relief

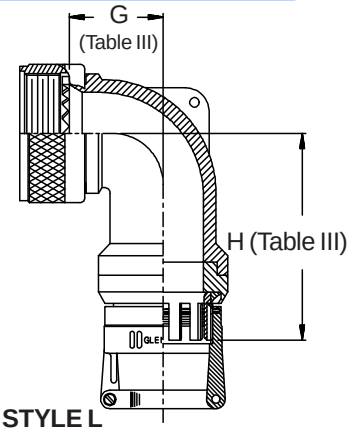

STYLE F
Light Duty
(Table V)

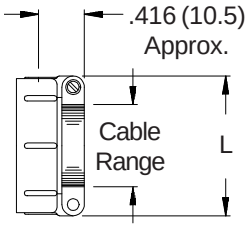

STYLE G
Light Duty
(Table IV)

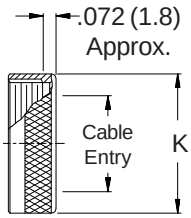

STYLE L
Light Duty
(Table V)

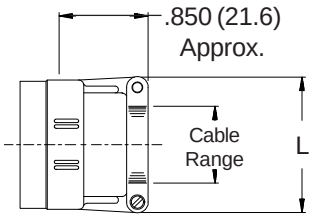

© 2005 Glenair, Inc. CAGE Code 06324 Printed in U.S.A.

See inside back cover
fold-out or pages 13 and
14 for Tables I and II.

TABLE III: ELBOW DIMENSIONS

Shell Size Conn. Desig. A-F-L-S	H	E Max		F Max		G Max		H Max	
08	09	.457	(11.6)	1.660	(42.2)	.500	(12.7)	1.670	(42.4)
10	11	.520	(13.2)	1.720	(43.7)	.595	(15.1)	1.790	(45.5)
12	13	.582	(14.8)	1.780	(45.2)	.610	(15.5)	1.810	(46.0)
14	15	.645	(16.4)	1.870	(47.5)	.700	(17.8)	1.880	(47.8)
16	17	.738	(18.7)	1.980	(50.3)	.885	(22.5)	1.970	(50.0)
18	19	.926	(23.5)	2.170	(55.1)	.975	(24.8)	2.140	(54.4)
20	21	.926	(23.5)	2.170	(55.1)	.975	(24.8)	2.140	(54.4)
22	23	1.020	(25.9)	2.320	(58.9)	1.125	(28.6)	2.250	(57.2)
24	25	1.020	(25.9)	2.320	(58.9)	1.125	(28.6)	2.250	(57.2)
28		1.145	(29.1)	2.370	(60.2)	1.225	(31.1)	2.420	(61.5)
32		1.207	(30.7)	2.470	(62.7)	1.575	(40.0)	2.670	(67.8)
36		1.238	(31.4)	2.560	(65.0)	1.775	(45.1)	2.670	(67.8)

TABLE IV: CABLE ENTRY

Dash No.	K Max		Cable Entry Max	
02	.545	(13.8)	.250	(6.4)
03	.670	(17.0)	.375	(9.5)
04	.795	(20.2)	.500	(12.7)
05	.920	(23.4)	.625	(15.9)
06	1.045	(26.5)	.750	(19.1)
07	1.170	(29.7)	.875	(22.2)
08	1.295	(32.9)	1.000	(25.4)
09	1.420	(36.1)	1.125	(28.6)
10	1.670	(42.4)	1.250	(31.8)

TABLE V: CABLE ENTRY

Dash No.	L Max		Cable Range Min		Cable Range Max	
02	.968	(24.6)	.125	(3.2)	.250	(6.4)
03	1.046	(26.6)	.250	(6.4)	.375	(9.5)
04	1.156	(29.4)	.250	(6.4)	.500	(12.7)
05	1.218	(30.9)	.375	(9.5)	.625	(15.9)
06	1.343	(34.1)	.500	(12.7)	.750	(19.1)
07	1.468	(37.3)	.625	(15.9)	.875	(22.2)
08	1.593	(40.5)	.625	(15.9)	1.000	(25.4)
09	1.718	(43.6)	.750	(19.1)	1.125	(28.6)
10	1.843	(46.8)	.875	(22.2)	1.250	(31.8)

1. When maximum cable entry (page 21) is exceeded, Style 2 will be supplied. Dimensions E, F, G and H will not apply. Please consult factory.
2. Metric dimensions (mm) are indicated in parentheses.
3. Cable range is defined as the accommodations range for the wire bundle or cable. Dimensions shown are not intended for inspection criteria.
4. Consult factory for shorter lengths on straight backshells.

© 2005 Glenair, Inc.