SYMBOL DEFINITION		
A DIMENSION WITHOUT AN INSPECTION REPORT SYMBOL ( ) DOES NOT REQUIRE INSPECTION. IT MAY BE CONTROLLED ON THE INDIVIDUAL COMPONENT DRAWING.	TOTAL NO OF INSPECTIONS REQUIRED	16
	LAST NO. USED	16

MISSING SYMBOLS
NO MISSING SYMBOL NUMBER

DWG STATUS					ZONE	REVISION HISTORY	AUTH	DR	APVD 1	APVD 2
DATE	STG	REV	N/P	CHG						
18SE01	R	01	-	-		ALL PARTS - REDRAWN TO PD,ADDED OPTIONAL CONSTRUCTION NOTES & REVISED MAT'L SPEC	213958	EOV	EOV	RC
11DE01	R	02	-	-		ALL PARTS - REMOVED 2.7 DIM & REVISED INSPECTION SYMBOL NUMBER	218438	EOV	EOV	RC
17JA03	R	03	-	-		ALL PARTS - UPDATED PDM ATTRIBUTES	234915	EAR	EAR	RC
23JA03	R	04	-	-		ALL PARTS - ADDED NOTE 5	235937	EOV	EOV	RC

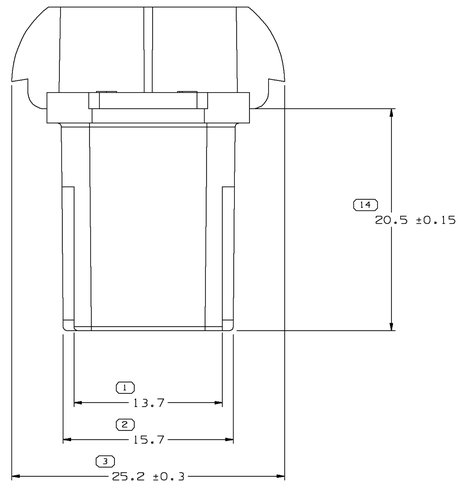

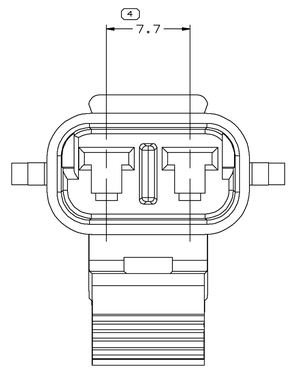

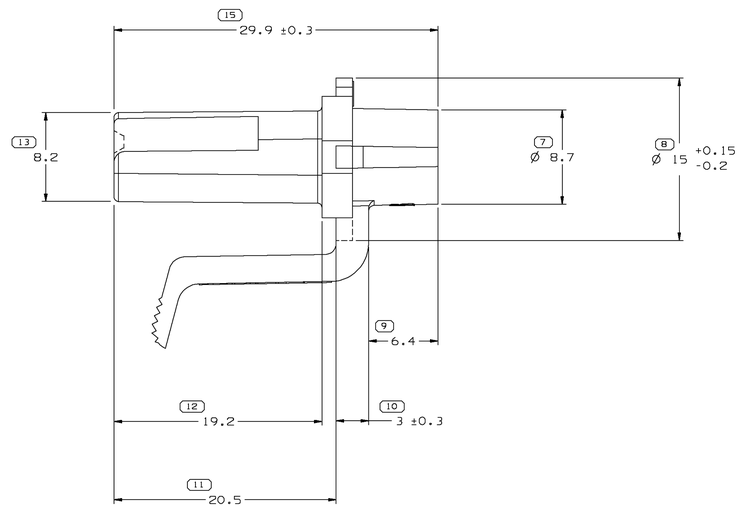

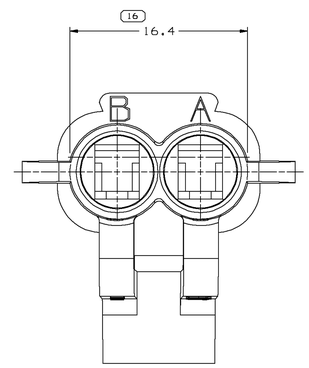

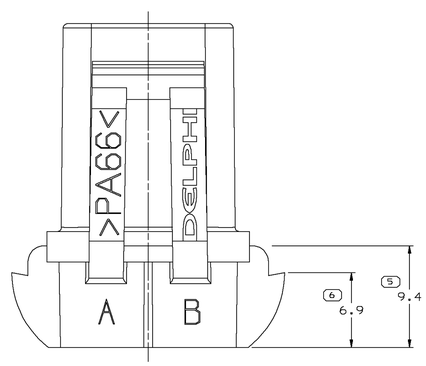

NOTES

1. UNLESS OTHERWISE SPECIFIED AND/OR INDICATED:
   DIMENSIONS ARE TO FACE OF VIEW SHOWN AND AUTOMATICALLY ROUNDED BY COMPUTER FOR INSPECTION (SEE MATH MODEL FOR PRECISE DIMENSIONS). FOR ALL OTHER DIMENSIONS NOT SHOWN BUT REQUIRED FOR TOOL BUILD, SEE MATH MODEL FOR PRECISE TOOL PATH DATA.

2. MATERIAL RECYCLING CODE >PA66< PER SAE J1344. (2.3)X(0.1) RAISED CHARACTERS AS SHOWN TO BE LOCATED ON ANY EXTERIOR SURFACE.OPTIONAL CONSTRUCTION TO BE NO MATERIAL RECYCLING CODE.

3. MATING COMPONENTS OR EQUIVALENT:
   CONNECTOR 15300002
   TERMINAL 12077412
   TERMINAL POSITION ASSURANCE LOCK 15300014

4. (2.3)X(0.1) RAISED DELPHI CORPORATE BRAND TO BE LOCATED ON ANY EXTERIOR SURFACE, PREFERABLY VISIBLE AT FINAL ASSEMBLY. OPTIONAL CONSTRUCTION TO BE "PED" OR NO LOGO.

5. CAVITY IDENTIFICATION LETTERS TO BE LOCATED ON BARRELS AND/OR RAIL.

PART NO	REV	N/P	STATUS	MATERIAL SPECIFICATION AND COLOR	VOLUME CM³
15300008	E9	-	-	M3592001 PA66 IM HS BLK	3.734
12177247	A8	-	-	M3592004 PA66 IM HS RED	3.734
12177246	A8	-	-	M3592002 PA66 IM HS NAT	3.734
12162693	A9	-	-	M3592012 PA66 IM HS GRA LT	3.734

R 0.1 MAX
R 0.2 MAX
SHARP CORNER TOLERANCE

DIMENSIONAL RANGE (MM)											CHART E1
FROM	> 0	> 20	> 30	> 70	> 100	> 150	> 200	> 250	> 300		
TO	20	30	70	100	150	200	250	300	400		
TOLERANCE UNLESS OTHERWISE SPECIFIED											
±0.15	±0.2	±0.3	±0.4	±0.5	±0.6	±0.8	±1	±1.2			
ANGULAR TOLERANCE ±2°											

15 PROCESS SENSITIVE DIMENSION

DIMENSIONS ENCLOSED IN ( ) INDICATE REFERENCE DIMENSIONS AND NO TOLERANCE LIMITS ARE ESTABLISHED

THIRD ANGLE PROJECTION

DO NOT SCALE
USE MATH DATA

DWG TYPE: PART DRAWING
STYLE
VOLUME (CM³): SEE CHART
DISTR CODE: D
ROUTING: 6900,6901

UNLESS OTHERWISE SPECIFIED

THIS DOCUMENT IS IN ACCORDANCE WITH ASME Y14.5M-1994 AS AMENDED BY THE GM GLOBAL DIMENSIONING AND TOLERANCING ADDENDUM - 1997. ALL GEOMETRIC TOLERANCES AND RELATED DATUMS APPLY RFS. RULE #1(PERFECT FORM AT MMC) DOES NOT APPLY WHEN RELATIONSHIP BETWEEN FEATURES IS ESTABLISHED BY ORIENTATION OR LOCATION TOLERANCES. SEPARATE POSITION CALLOUTS MAY BE GIVEN SEPARATELY, REGARDLESS OF DATUM REFERENCE.
ALL DIMENSIONS ARE IN MILLIMETERS

REFERENCE

DELPHI

DELPHI PACKARD ELECTRIC SYSTEMS
WARREN, OH

		DATE
DR		
APVD1	E. VAZQUEZ	18SE01
APVD2	E. VAZQUEZ	18SE01
APVD3	R. CORZAS	18SE01
APVD4		
APVD5		

SUBSTANCES OF CONCERN AND RECYCLED CONTENT PER DELPHI 10949001

MATERIAL: SEE CHART

DRAWING NAME: TAXI CONN 2 F M/P 280 N/A SEALED

DRAWING NUMBER: 12162700

SIZE	SCALE	FRAME NO	SHEET NO	STG	REV	N/P
A0	5:1	1 OF 1	1 OF 1	R	04	-