High Temperature 200°C, C0G Dielectric, 10 – 200 VDC (Industrial Grade)

Electronic Components KEMET CHARGED.

Overview

KEMET's high temperature surface mount C0G Multilayer Ceramic Capacitors (MLCCs) feature a robust, proprietary base metal dielectric system that offers industry-leading performance relative to capacitance and case size combined with capacitance stability at extreme temperatures up to +200°C. This new platform promotes downsizing opportunities of existing high temperature C0G technology, and offers replacement opportunities of existing X7R, BX and BR dielectric technologies.

KEMET's high temperature C0G dielectric features a 200°C maximum operating temperature and is considered "stable." The Electronics Components, Assemblies & Materials Association (EIA) characterizes C0G dielectric as a Class I material. Components of this classification are temperature compensating and are suited for resonant circuit applications or those where Q and stability of capacitance characteristics are required. C0G exhibits no change in capacitance with respect to time and voltage and boasts a negligible change in capacitance with reference to ambient temperature. Capacitance change is limited to ±30 ppm/ºC from -55°C to +200°C.

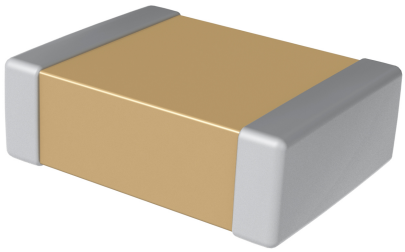

Click image above for interactive 3D content

Open PDF in Adobe Reader for full functionality

Ordering Information

C	1210	H	124	J	5	G	A	C	TU
Ceramic	Case Size (L" x W")	Specification/ Series	Capacitance Code (pF)	Capacitance Tolerance[1]	Rated Voltage (VDC)	Dielectric	Failure Rate/ Design	Termination Finish[2]	Packaging/Grade (C-Spec)[3]
	0402 0603 0805 1206 1210 1812 2220	H= High Temperature (200°C)	2 significant digits + number of zeros. Use 9 for 1.0 – 9.9 pF Use 8 for 0.5 – .99 pF e.g., 2.2 pF = 229 e.g., 0.5 pF = 508	B = ±0.10 pF C = ±0.25 pF D = ±0.5 pF F = ±1% G = ±2% J = ±5% K = ±10% M = ±20%	8 = 10 4 = 16 3 = 25 5 = 50 1 = 100 2 = 200	G = C0G	A = N/A	C = 100% Matte Sn L = SnPb (5% minimum)	Blank = Bulk TU = 7" Reel (full reel quantity) T050 = 50 pcs / 7" Reel T100 = 100pcs / 7" Reel T250 = 250pcs / 7" Reel T500 = 500pcs / 7" Reel T1K0 = 1,000 pcs / Reel

[1] *Additional capacitance tolerance offerings may be available. Contact KEMET for details.*

[2] *Additional termination finish options may be available. Contact KEMET for details.*

[3] *Reeling quantities are dependent upon chip size and thickness dimension. When ordering using the "T1K0" packaging option, 1812 thru 2225 case size devices with chip thickness of ≥1.9 mm (nominal) may be shipped on multiple 7" reels or a single 13" reel. Additional reeling or packaging options may be available. Contact KEMET for details.*

© KEMET Electronics Corporation • P.O. Box 5928 • Greenville, SC 29606 (864) 963-6300 • www.kemet.com

Dimensions – Millimeters (Inches)

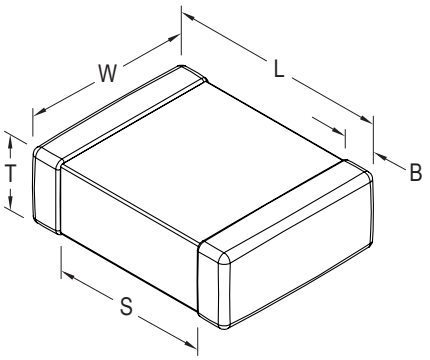

EIA Size Code	Metric Size Code	L Length	W Width	T Thickness	B Bandwidth	S Separation Minimum	Mounting Technique
0402	1005	1.00 (.040) ±0.05 (.002)	0.50 (.020) ±0.05 (.002)	See Table 2 for Thickness	0.30 (.012) ±0.10 (.004)	0.30 (.012)	Solder Reflow Only
0603	1608	1.60 (.063) ±0.15 (.006)	0.80 (.032) ±0.15 (.006)		0.35 (.014) ±0.15 (.006)	0.70 (.028)	Solder Wave or Solder Reflow
0805	2012	2.00 (.079) ±0.20 (.008)	1.25 (.049) ±0.20 (.008)		0.50 (0.02) ±0.25 (.010)	0.75 (.030)	
1206	3216	3.20 (.126) ±0.20 (.008)	1.60 (.063) ±0.20 (.008)		0.50 (0.02) ±0.25 (.010)	N/A	
1210	3225	3.20 (.126) ±0.20 (.008)	2.50 (.098) ±0.20 (.008)		0.50 (0.02) ±0.25 (.010)		Solder Reflow Only
1812	4532	4.50 (.177) ±0.30 (.012)	3.20 (.126) ±0.30 (.012)		0.60 (.024) ±0.35 (.014)		
2220	5650	5.70 (.224) ±0.40 (.016)	5.00 (.197) ±0.40 (.016)		0.60 (.024) ±0.35 (.014)		

Benefits

- -55°C to +200°C operating temperature range
- Lead (Pb)-Free, RoHS and REACH compliant
- EIA 0402, 0603, 0805, 1206, 1210, 1812, and 2220 case sizes
- DC voltage ratings of 10 V, 16 V, 25 V, 50 V, 100 V, and 200 V
- Capacitance offerings ranging from 0.5 pF up to 0.47 µF
- Available capacitance tolerances of ±0.10 pF, ±0.25 pF, ±0.5 pF, ±1%, ±2%, ±5%, ±10% or ±20%
- No piezoelectric noise• Extremely low ESR and ESL
- High thermal stability
- High ripple current capability
- Preferred capacitance solution at line frequencies and into the MHz range
- No capacitance change with respect to applied rated DC voltage
- Negligible capacitance change with respect to temperature from -55°C to +200°C
- No capacitance decay with time
- Non-polar device, minimizing installation concerns
- 100% pure matte tin-plated termination finish allowing for excellent solderability

Applications

Typical applications include critical timing, tuning, circuits requiring low loss, circuits with pulse, high current, decoupling, bypass, filtering, transient voltage suppression, blocking and energy storage for use in extreme environments such as down-hole exploration, aerospace engine compartments and geophysical probes.

Qualification/Certification

High temperature (200ºC) Industrial grade products meet or exceed the requirements outlined in Table 4, Performance & Reliability. Qualification packages are available for review and download on our website at www.kemet.com/hightemp

Environmental Compliance

Lead (Pb)-Free, RoHS, and REACH compliant without exemptions (excluding SnPb termination finish option).

Electrical Parameters/Characteristics

Item	Parameters/Characteristics
Operating Temperature Range	-55°C to +200°C
Capacitance Change with Reference to +25°C and 0 VDC Applied (TCC)	±30 ppm/ºC (up to +200ºC)
Aging Rate (Maximum % Capacitance Loss/Decade Hour)	0%
Dielectric Withstanding Voltage (DWV)	250% of rated voltage (5 ±1 second and charge/discharge not exceeding 50 mA)
Dissipation Factor (DF) Maximum Limit @ 25ºC	0.1%
Insulation Resistance (IR) Limit @ 25°C	1,000 megohm microfarads or 100 GΩ (Rated voltage applied for 120 ±5 seconds @ 25°C)

To obtain IR limit, divide MΩ-µF value by the capacitance and compare to GΩ limit. Select the lower of the two limits.
Capacitance and Dissipation Factor (DF) measured under the following conditions:
1 MHz ±100 kHz and 1.0 Vrms ±0.2 V if capacitance ≤ 1,000 pF
1 kHz ± 50 Hz and 1.0 Vrms ±0.2 V if capacitance > 1,000 pF
Note: When measuring capacitance it is important to ensure the set voltage level is held constant. The HP4284 and Agilent E4980 have a feature known as Automatic Level Control (ALC). The ALC feature should be switched to "ON."

Post Environmental Limits

High Temperature Life, Biased Humidity, Moisture Resistance					
Dielectric	Rated DC Voltage	Capacitance Value	Dissipation Factor (Maximum %)	Capacitance Shift	Insulation Resistance
C0G	All	All	0.5	0.3% or ±0.25 pF	10% of Initial Limit

Electrical Characteristics

Delta Cap vs. Temperature (Typical)

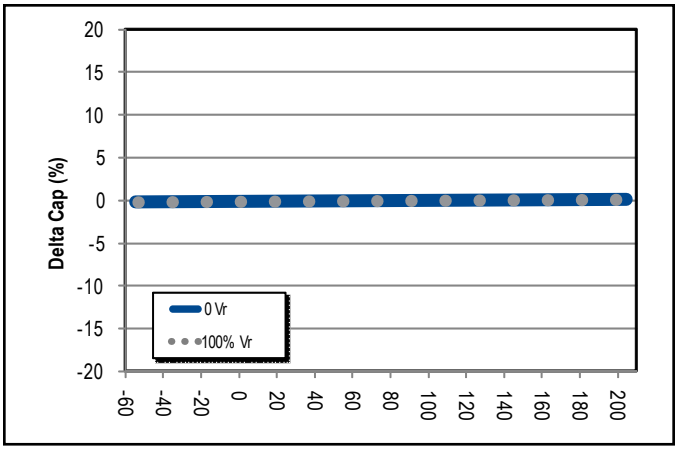

C1210H104J1GAC - Life Test IR Distribution (Lognormal)

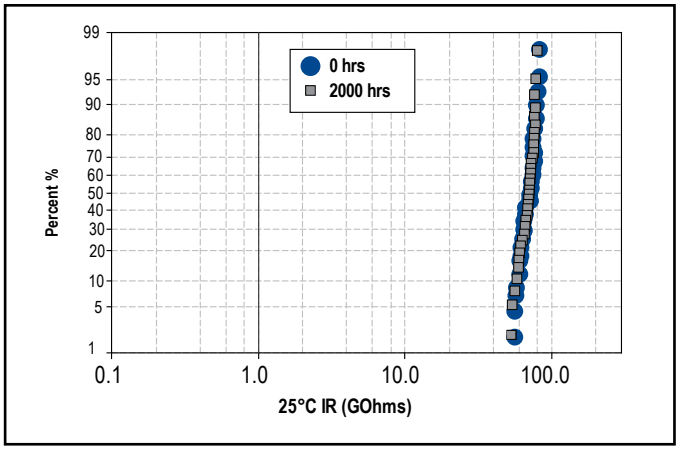

Capacitance vs. Temperature with 25 V DC Bias (Rated Voltage)

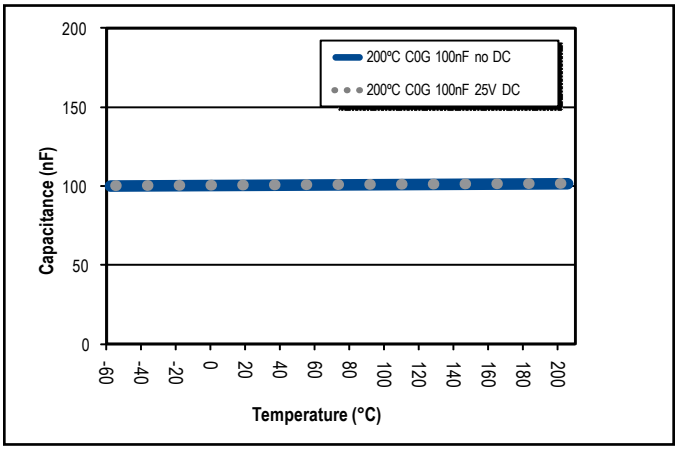

DF vs. Temperature without DC Bias.

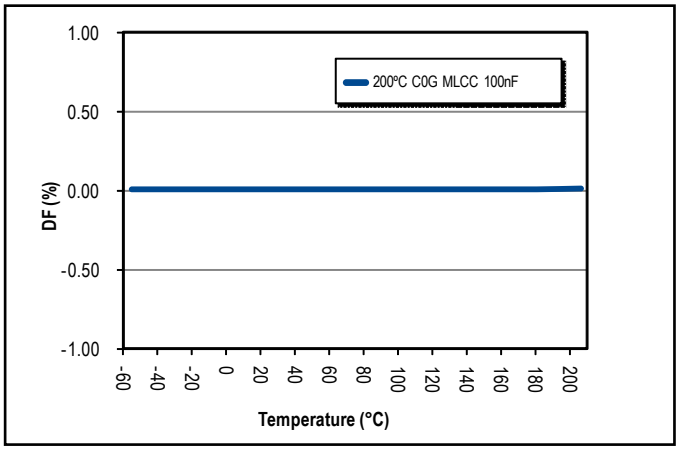

IR vs. Temperature with 25 V DC Bias (Rated Voltage)

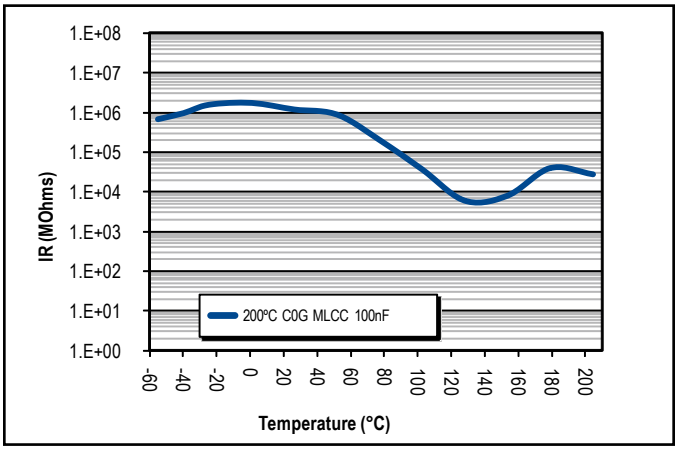

BME vs. PME/IR vs. Temperature with 25 V DC Bias (Rated Voltage)

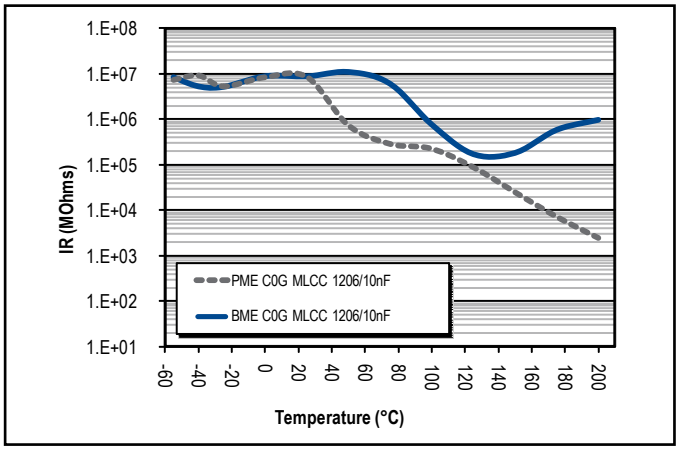

Table 1A – Capacitance Range/Selection Waterfall (0402 – 1206 Case Sizes)

Capacitance	Cap Code	Case Size / Series								C0402H					C0603H						C0805H						C1206H					
		Voltage Code								8	4	3	5	1	8	4	3	5	1	2	8	4	3	5	1	2	8	4	3	5	1	2
		Rated Voltage (VDC)								10	16	25	50	100	10	16	25	50	100	200	10	16	25	50	100	200	10	16	25	50	100	200
		Capacitance Tolerance								Product Availability and Chip Thickness Codes See Table 2 for Chip Thickness Dimensions																						
0.5 & 0.75 pF	508 & 758	B	C	D						BB	BB	BB	BB		CF	CF	CF	CF	CF	CF	DN	DN	DN	DN	DN	DN						
1.0 – 9.0 pF*	109 – 919*	B	C	D						BB	BB	BB	BB		CF	CF	CF	CF	CF	CF	DN	DN	DN	DN	DN	DN	EB	EB	EB	EB	EB	EB
10 – 91 pF*	100 – 910*				F	G	J	K	M	BB	BB	BB	BB		CF	CF	CF	CF	CF	CF	DN	DN	DN	DN	DN	DN	EB	EB	EB	EB	EB	EB
100 – 180 pF*	101 – 181*				F	G	J	K	M	BB	BB	BB	BB	BB	CF	CF	CF	CF	CF	CF	DN	DN	DN	DN	DN	DN	EB	EB	EB	EB	EB	EB
200 – 430 pF*	201 – 431*				F	G	J	K	M	BB	BB	BB	BB	BB	CF	CF	CF	CF	CF		DN	DN	DN	DN	DN	DN	EB	EB	EB	EB	EB	EB
470 pF	471				F	G	J	K	M	BB	BB	BB	BB	BB	CF	CF	CF	CF	CF		DN	DN	DN	DN	DN	DP	EB	EB	EB	EB	EB	EB
510 pF	511				F	G	J	K	M	BB	BB	BB	BB	BB	CF	CF	CF	CF	CF		DN	DN	DN	DN	DN	DN	EB	EB	EB	EB	EB	EB
560 pF	561				F	G	J	K	M	BB	BB	BB	BB	BB	CF	CF	CF	CF	CF		DN	DN	DN	DN	DN	DN	EB	EB	EB	EB	EB	EB
620 pF	621				F	G	J	K	M	BB	BB	BB	BB	BB	CF	CF	CF	CF	CF		DN	DN	DN	DN	DN	DN	EB	EB	EB	EB	EB	EB
680 pF	681				F	G	J	K	M	BB	BB	BB	BB	BB	CF	CF	CF	CF	CF		DN	DN	DN	DN	DN	DN	EB	EB	EB	EB	EB	EB
750 pF	751				F	G	J	K	M	BB	BB	BB	BB	BB	CF	CF	CF	CF	CF		DN	DN	DN	DN	DN	DN	EB	EB	EB	EB	EB	EB
820 pF	821				F	G	J	K	M	BB	BB	BB	BB	BB	CF	CF	CF	CF	CF		DN	DN	DN	DN	DN	DN	EB	EB	EB	EB	EB	EB
910 pF	911				F	G	J	K	M	BB	BB	BB	BB	BB	CF	CF	CF	CF	CF		DN	DN	DN	DN	DP	DP	EB	EB	EB	EB	EB	EB
1,000 pF	102				F	G	J	K	M	BB	BB	BB	BB	BB	CF	CF	CF	CF	CF		DN	DN	DN	DN	DP	DP	EB	EB	EB	EB	EB	EE
1,100 pF	112				F	G	J	K	M	BB	BB	BB	BB		CF	CF	CF	CF	CF		DN	DN	DN	DN	DN		EB	EB	EB	EB	EB	EB
1,200 pF	122				F	G	J	K	M	BB	BB	BB	BB		CF	CF	CF	CF	CF		DN	DN	DN	DN	DN		EB	EB	EB	EB	EB	EB
1,300 pF	132				F	G	J	K	M	BB	BB	BB	BB		CF	CF	CF	CF	CF		DP	DP	DP	DP	DP		EB	EB	EB	EB	EC	EC
1,500 pF	152				F	G	J	K	M	BB	BB	BB	BB		CF	CF	CF	CF	CF		DP	DP	DP	DP	DP		EB	EB	EB	EB	ED	EC
1,600 pF	162				F	G	J	K	M						CF	CF	CF	CF	CF		DP	DP	DP	DP	DP		EB	EB	EB	EB	ED	ED
1,800 pF	182				F	G	J	K	M						CF	CF	CF	CF	CF		DP	DP	DP	DP	DP		EB	EB	EB	EB	ED	ED
2,000 pF	202				F	G	J	K	M						CF	CF	CF	CF	CF		DN	DN	DN	DN	DN		EB	EB	EB	EB	ED	ED
2,200 pF	222				F	G	J	K	M						CF	CF	CF	CF	CF		DN	DN	DN	DN	DN		EB	EB	EB	EB	EE	EE
2,400 pF	242				F	G	J	K	M						CF	CF	CF	CF	CF		DN	DN	DN	DN	DN		EB	EB	EB	EB	EC	EC
2,700 pF	272				F	G	J	K	M						CF	CF	CF	CF	CF		DN	DN	DN	DN	DN		EB	EB	EB	EB	EC	EC
3,000 pF	302				F	G	J	K	M						CF	CF	CF	CF	CF		DP	DP	DP	DP	DN		EC	EC	EC	EC	EC	
3,300 pF	332				F	G	J	K	M						CF	CF	CF	CF	CF		DP	DP	DP	DP	DN		EC	EC	EC	EC	EE	
3,600 pF	362				F	G	J	K	M						CF	CF	CF	CF	CF		DP	DP	DP	DP	DN		EC	EC	EC	EC	EE	
3,900 pF	392				F	G	J	K	M						CF	CF	CF	CF	CF		DE	DE	DE	DE	DN		EC	EC	EC	EC	EF	
4,300 pF	432				F	G	J	K	M						CF	CF	CF	CF	CF		DE	DE	DE	DE	DN		EC	EC	EC	EC	EC	
4,700 pF	472				F	G	J	K	M						CF	CF	CF	CF	CF		DE	DE	DE	DE	DN		EC	EC	EC	EC	EC	
5,100 pF	512				F	G	J	K	M						CF	CF	CF	CF			DE	DE	DE	DE	DN		ED	ED	ED	ED	ED	
5,600 pF	562				F	G	J	K	M						CF	CF	CF	CF			DN	DN	DN	DN	DN		ED	ED	ED	ED	ED	
6,200 pF	622				F	G	J	K	M						CF	CF	CF	CF			DN	DN	DN	DN	DN		EB	EB	EB	EB	EB	
6,800 pF	682				F	G	J	K	M						CF	CF	CF	CF			DN	DN	DN	DN	DN		EB	EB	EB	EB	EB	
7,500 pF	752				F	G	J	K	M						CF	CF	CF				DN	DN	DN	DN	DN		EB	EB	EB	EB	EB	
8,200 pF	822				F	G	J	K	M						CF	CF	CF				DN	DN	DN	DN	DN		EC	EC	EC	EC	EB	
9,100 pF	912				F	G	J	K	M						CF	CF	CF				DN	DN	DN	DN	DN		EC	EC	EC	EC	EB	
10,000 pF	103				F	G	J	K	M						CF	CF	CF				DN	DN	DN	DN	DP		ED	ED	ED	ED	EB	
12,000 pF	123				F	G	J	K	M												DN	DN	DN	DN	DE		EB	EB	EB	EB	EB	
15,000 pF	153				F	G	J	K	M												DN	DN	DN	DP	DG		EB	EB	EB	EB	EB	
18,000 pF	183				F	G	J	K	M												DN	DN	DN	DP			EB	EB	EB	EB	EB	
22,000 pF	223				F	G	J	K	M												DP	DP	DP	DF			EB	EB	EB	EB	EC	
27,000 pF	273				F	G	J	K	M												DF	DF	DF				EB	EB	EB	EB	EE	
33,000 pF	333				F	G	J	K	M												DG	DG	DG				EB	EB	EB	EB	EE	
47,000 pF	473				F	G	J	K	M																		EC	EC	EC	EE	EH	
56,000 pF	563				F	G	J	K	M																		ED	ED	ED	EF		
68,000 pF	683				F	G	J	K	M																		EF	EF	EF	EH		
82,000 pF	823				F	G	J	K	M																		EH	EH	EH	EH		
0.10 µF	104				F	G	J	K	M																		EH	EH	EH			
Capacitance	Cap Code	Rated Voltage (VDC)								10	16	25	50	100	10	16	25	50	100	200	10	16	25	50	100	200	10	16	25	50	100	200
		Voltage Code								8	4	3	5	1	8	4	3	5	1	2	8	4	3	5	1	2	8	4	3	5	1	2
		Case Size / Series								C0402H					C0603H						C0805H						C1206H					

**Capacitance range Includes E24 decade values only. (i.e., 10, 11, 12, 13, 15, 16, 18, 20, 22, 24, 27, 30, 33, 36, 39, 43, 47, 51, 56, 62, 68, 75, 82 and 91)*

KEMET reserves the right to substitute product with an improved temperature characteristic, tighter capacitance tolerance and/or higher voltage capability within the same form factor (configuration and dimensions).

These products are protected under US Patents 7,172,985 and 7,670,981, other patents pending, and any foreign counterparts..

Table 1B – Capacitance Range/Selection Waterfall (1210 – 2220 Case Sizes)

Capacitance	Cap Code	Case Size / Series								C1210H						C1812H						C2220H					
		Voltage Code								8	4	3	5	1	2	8	4	3	5	1	2	8	4	3	5	1	2
		Rated Voltage (VDC)								10	16	25	50	100	200	10	16	25	50	100	200	10	16	25	50	100	200
		Capacitance Tolerance								Product Availability and Chip Thickness Codes See Table 2 for Chip Thickness Dimensions																	
1.0 - 9.1 pF*	109 - 919*	B	C	D						FB	FB	FB	FB	FB	FB												
10 - 91 pF*	100 - 910*				F	G	J	K	M	FB	FB	FB	FB	FB	FB												
100 - 910 pF*	101 - 911*				F	G	J	K	M	FB	FB	FB	FB	FB	FB												
1,000 pF	102				F	G	J	K	M	FB	FB	FB	FB	FB	FB												
1,100 pF	112				F	G	J	K	M	FB	FB	FB	FB	FB	FB												
1,200 pF	122				F	G	J	K	M	FB	FB	FB	FB	FB	FB												
1,300 pF	132				F	G	J	K	M	FB	FB	FB	FB	FB	FC												
1,500 pF	152				F	G	J	K	M	FB	FB	FB	FB	FB	FE												
1,600 pF	162				F	G	J	K	M	FB	FB	FB	FB	FB	FE												
1,800 pF	182				F	G	J	K	M	FB	FB	FB	FB	FB	FE												
2,000 pF	202				F	G	J	K	M	FB	FB	FB	FB	FC	FE												
2,200 pF	222				F	G	J	K	M	FB	FB	FB	FB	FC	FG												
2,400 pF	242				F	G	J	K	M	FB	FB	FB	FB	FC	FC												
2,700 pF	272				F	G	J	K	M	FB	FB	FB	FB	FC	FC												
3,000 pF	302				F	G	J	K	M	FB	FB	FB	FB	FC	FF												
3,300 pF	332				F	G	J	K	M	FB	FB	FB	FB	FF	FF												
3,600 pF	362				F	G	J	K	M	FB	FB	FB	FB	FF	FF												
3,900 pF	392				F	G	J	K	M	FB	FB	FB	FB	FF	FF												
4,300 pF	432				F	G	J	K	M	FB	FB	FB	FB	FF	FF												
4,700 pF	472				F	G	J	K	M	FF	FF	FF	FF	FG	FG												
5,100 pF	512				F	G	J	K	M	FB	FB	FB	FB	FG	FG												
5,600 pF	562				F	G	J	K	M	FB	FB	FB	FB	FG	FG												
6,200 pF	622				F	G	J	K	M	FB	FB	FB	FB	FG													
6,800 pF	682				F	G	J	K	M	FB	FB	FB	FB	FG													
7,500 pF	752				F	G	J	K	M	FC	FC	FC	FC	FC													
8,200 pF	822				F	G	J	K	M	FC	FC	FC	FC	FC													
9,100 pF	912				F	G	J	K	M	FE	FE	FE	FE	FE													
10,000 pF	103				F	G	J	K	M	FF	FF	FF	FF	FF													
12,000 pF	123				F	G	J	K	M	FG	FG	FG	FG	FB													
15,000 pF	153				F	G	J	K	M	FG	FG	FG	FG	FB		GB	GB	GB	GB	GB							
18,000 pF	183				F	G	J	K	M	FB	FB	FB	FB	FB		GB	GB	GB	GB	GB							
22,000 pF	223				F	G	J	K	M	FB	FB	FB	FB	FB		GB	GB	GB	GB	GB							
27,000 pF	273				F	G	J	K	M	FB	FB	FB	FB	FB		GB	GB	GB	GB	GB							
33,000 pF	333				F	G	J	K	M	FB	FB	FB	FB	FB		GB	GB	GB	GB	GB							
47,000 pF	473				F	G	J	K	M	FB	FB	FB	FB	FE		GB	GB	GB	GB	GB							
56,000 pF	563				F	G	J	K	M	FB	FB	FB	FB	FF		GB	GB	GB	GB	GB							
68,000 pF	683				F	G	J	K	M	FB	FB	FB	FC	FG		GB	GB	GB	GB	GB							
82,000 pF	823				F	G	J	K	M	FC	FC	FC	FF	FH		GB	GB	GB	GB	GB							
0.10 µF	104				F	G	J	K	M	FE	FE	FE	FG	FM		GB	GB	GB	GB	GD							
0.12 µF	124				F	G	J	K	M	FG	FG	FG	FH			GB	GB	GB	GB	GH							
0.15 µF	154				F	G	J	K	M	FH	FH	FH	FM			GD	GD	GD	GD	GN							
0.18 µF	184				F	G	J	K	M							GH	GH	GH	GH								
0.22 µF	224				F	G	J	K	M							GK	GK	GK	GK								
0.47 µF	474				F	G	J	K	M													JJ	JJ	JJ	JJ		
Capacitance	Cap Code	Rated Voltage (VDC)								10	16	25	50	100	200	10	16	25	50	100	200	10	16	25	50	100	200
		Voltage Code								8	4	3	5	1	2	8	4	3	5	1	2	8	4	3	5	1	2
		Case Size / Series								C1210H						C1812H						C2220H					

**Capacitance range Includes E24 decade values only. (i.e., 10, 11, 12, 13, 15, 16, 18, 20, 22, 24, 27, 30, 33, 36, 39, 43, 47, 51, 56, 62, 68, 75, 82 and 91)*
KEMET reserves the right to substitute product with an improved temperature characteristic, tighter capacitance tolerance and/or higher voltage capability within the same form factor (configuration and dimensions).
These products are protected under US Patents 7,172,985 and 7,670,981, other patents pending, and any foreign counterparts..

Table 2 – Chip Thickness/Packaging Quantities

Thickness Code	Case Size	Thickness ± Range (mm)	Paper Quantity		Plastic Quantity	
			7" Reel	13" Reel	7" Reel	13" Reel
BB	0402	0.50 ± 0.05	10,000	50,000	0	0
CF	0603	0.80 ± 0.07*	4,000	15,000	0	0
DN	0805	0.78 ± 0.10*	4,000	15,000	0	0
DP	0805	0.90 ± 0.10*	4,000	15,000	0	0
DE	0805	1.00 ± 0.10	0	0	2,500	10,000
DF	0805	1.10 ± 0.10	0	0	2,500	10,000
DG	0805	1.25 ± 0.15	0	0	2,500	10,000
EB	1206	0.78 ± 0.10	4,000	10,000	4,000	10,000
EC	1206	0.90 ± 0.10	0	0	4,000	10,000
ED	1206	1.00 ± 0.10	0	0	2,500	10,000
EE	1206	1.10 ± 0.10	0	0	2,500	10,000
EF	1206	1.20 ± 0.15	0	0	2,500	10,000
EH	1206	1.60 ± 0.20	0	0	2,000	8,000
FB	1210	0.78 ± 0.10	0	0	4,000	10,000
FC	1210	0.90 ± 0.10	0	0	4,000	10,000
FE	1210	1.00 ± 0.10	0	0	2,500	10,000
FF	1210	1.10 ± 0.10	0	0	2,500	10,000
FG	1210	1.25 ± 0.15	0	0	2,500	10,000
FH	1210	1.55 ± 0.15	0	0	2,000	8,000
FM	1210	1.70 ± 0.20	0	0	2,000	8,000
GB	1812	1.00 ± 0.10	0	0	1,000	4,000
GD	1812	1.25 ± 0.15	0	0	1,000	4,000
GH	1812	1.40 ± 0.15	0	0	1,000	4,000
GK	1812	1.60 ± 0.20	0	0	1,000	4,000
GN	1812	1.70 ± 0.20	0	0	1,000	4,000
JJ	2220	2.20 ± 0.15	0	0	500	2,000
Thickness Code	**Case Size**	**Thickness ± Range (mm)**	**7" Reel**	**13" Reel**	**7" Reel**	**13" Reel**
			Paper Quantity		**Plastic Quantity**	

Package quantity based on finished chip thickness specifications.

Table 3 – Chip Capacitor Land Pattern Design Recommendations per IPC–7351

EIA Size Code	Metric Size Code	Density Level A: Maximum (Most) Land Protrusion (mm)					Density Level B: Median (Nominal) Land Protrusion (mm)					Density Level C: Minimum (Least) Land Protrusion (mm)				
		C	Y	X	V1	V2	C	Y	X	V1	V2	C	Y	X	V1	V2
0402	1005	0.50	0.72	0.72	2.20	1.20	0.45	0.62	0.62	1.90	1.00	0.40	0.52	0.52	1.60	0.80
0603	1608	0.90	1.15	1.10	4.00	2.10	0.80	0.95	1.00	3.10	1.50	0.60	0.75	0.90	2.40	1.20
0805	2012	1.00	1.35	1.55	4.40	2.60	0.90	1.15	1.45	3.50	2.00	0.75	0.95	1.35	2.80	1.70
1206	3216	1.60	1.35	1.90	5.60	2.90	1.50	1.15	1.80	4.70	2.30	1.40	0.95	1.70	4.00	2.00
1210	3225	1.60	1.35	2.80	5.65	3.80	1.50	1.15	2.70	4.70	3.20	1.40	0.95	2.60	4.00	2.90
1210[1]	3225	1.50	1.60	2.90	5.60	3.90	1.40	1.40	2.80	4.70	3.30	1.30	1.20	2.70	4.00	3.00
1812	4532	2.15	1.60	3.60	6.90	4.60	2.05	1.40	3.50	6.00	4.00	1.95	1.20	3.40	5.30	3.70
2220	5650	2.75	1.70	5.50	8.20	6.50	2.65	1.50	5.40	7.30	5.90	2.55	1.30	5.30	6.60	5.60

[1] *Only for capacitance values ≥ 22 µF*

Density Level A: *For low-density product applications. Recommended for wave solder applications and provides a wider process window for reflow solder processes. KEMET only recommends wave soldering of EIA 0603, 0805 and 1206 case sizes.*

Density Level B: *For products with a moderate level of component density. Provides a robust solder attachment condition for reflow solder processes.*

Density Level C: *For high component density product applications. Before adapting the minimum land pattern variations the user should perform qualification testing based on the conditions outlined in IPC Standard 7351 (IPC–7351).*

Image below based on Density Level B for an EIA 1210 case size.

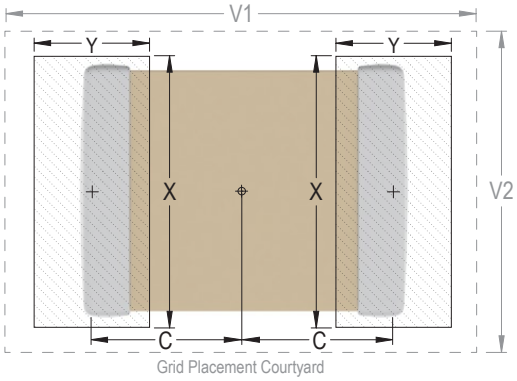

Soldering Process

Recommended Soldering Technique:

- Solder wave or solder reflow for EIA case sizes 0603, 0805 and 1206
- All other EIA case sizes are limited to solder reflow only

Recommended Reflow Soldering Profile:

KEMET's families of surface mount multilayer ceramic capacitors (SMD MLCCs) are compatible with wave (single or dual), convection, IR or vapor phase reflow techniques. Preheating of these components is recommended to avoid extreme thermal stress. KEMET's recommended profile conditions for convection and IR reflow reflect the profile conditions of the IPC/J-STD-020 standard for moisture sensitivity testing. These devices can safely withstand a maximum of three reflow passes at these conditions.

Profile Feature	Termination Finish	
	SnPb	100% Matte Sn
Preheat/Soak		
Temperature Minimum (T_{Smin})	100°C	150°C
Temperature Maximum (T_{Smax})	150°C	200°C
Time (t_S) from T_{Smin} to T_{Smax}	60 – 120 seconds	60 – 120 seconds
Ramp-Up Rate (T_L to T_P)	3°C/second maximum	3°C/second maximum
Liquidous Temperature (T_L)	183°C	217°C
Time Above Liquidous (t_L)	60 – 150 seconds	60 – 150 seconds
Peak Temperature (T_P)	235°C	260°C
Time Within 5°C of Maximum Peak Temperature (t_P)	20 seconds maximum	30 seconds maximum
Ramp-Down Rate (T_P to T_L)	6°C/second maximum	6°C/second maximum
Time 25°C to Peak Temperature	6 minutes maximum	8 minutes maximum

Note 1: All temperatures refer to the center of the package, measured on the capacitor body surface that is facing up during assembly reflow.

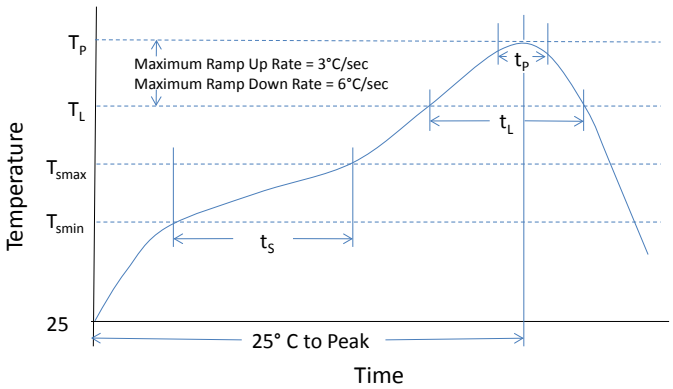

Table 4 – Performance & Reliability: Test Methods and Conditions

Product Qualification Test Plan	
Reliability/Environmental Tests per MIL–STD–202//JESD22	
High Temperature Life	200°C rated voltage 2,000 hours
Load Humidity	85°C /85%RH rated voltage 1,000 hours
Low Voltage Humidity	85°C /85%RH, 1.5 V, 1,000 hours
Temperature Cycling	-55°C to +200°C, 50 Cycles
Thermal Shock	-55°C to +150°C, 20 seconds transfer, 15 minute dwell, 300 cycles
Moisture Resistance	Cycled Temp/RH 0 V, 10 cycles @ 24 hours each
Physical, Mechanical & Process Tests per MIL–STD 202/JIS–C–6429	
Resistance to Solvents	Include Aqueous wash chemical, OKEM Clean or equivalent
Mechanical Shock and Vibration	Method 213: Figure 1, Condition F Method 204: 5 gs for 20 minutes 12 cycles
Resistance to Soldering Heat	Condition B, no per-heat of samples, Single Wave Solder
Terminal Strength	Force of 1.8 kg for 60 seconds
Board Flex	Appendix 2, Note: 3.0 mm (minimum)

Storage and Handling

Ceramic chip capacitors should be stored in normal working environments. While the chips themselves are quite robust in other environments, solderability will be degraded by exposure to high temperatures, high humidity, corrosive atmospheres, and long term storage. In addition, packaging materials will be degraded by high temperature– reels may soften or warp and tape peel force may increase. KEMET recommends that maximum storage temperature not exceed 40ºC and maximum storage humidity not exceed 70% relative humidity. Temperature fluctuations should be minimized to avoid condensation on the parts and atmospheres should be free of chlorine and sulfur bearing compounds. For optimized solderability chip stock should be used promptly, preferably within 1.5 years of receipt.

Construction

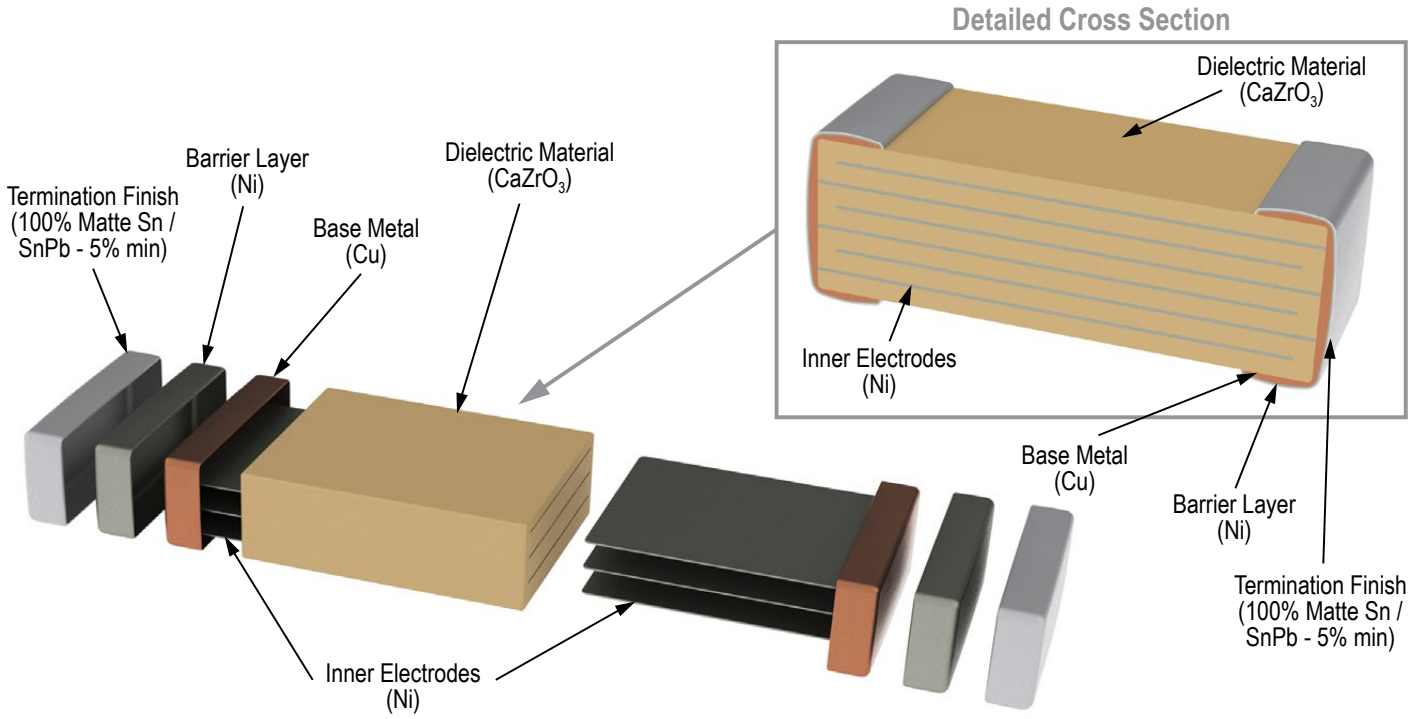

Capacitor Marking (Optional):

Laser marking option is not available on:

- C0G, Ultra Stable X8R and Y5V dielectric devices
- EIA 0402 case size devices
- EIA 0603 case size devices with Flexible Termination option.
- KPS Commercial and Automotive grade stacked devices.

These capacitors are supplied unmarked only.

Tape & Reel Packaging Information

KEMET offers multilayer ceramic chip capacitors packaged in 8, 12 and 16 mm tape on 7" and 13" reels in accordance with EIA Standard 481. This packaging system is compatible with all tape-fed automatic pick and place systems. See Table 2 for details on reeling quantities for commercial chips.

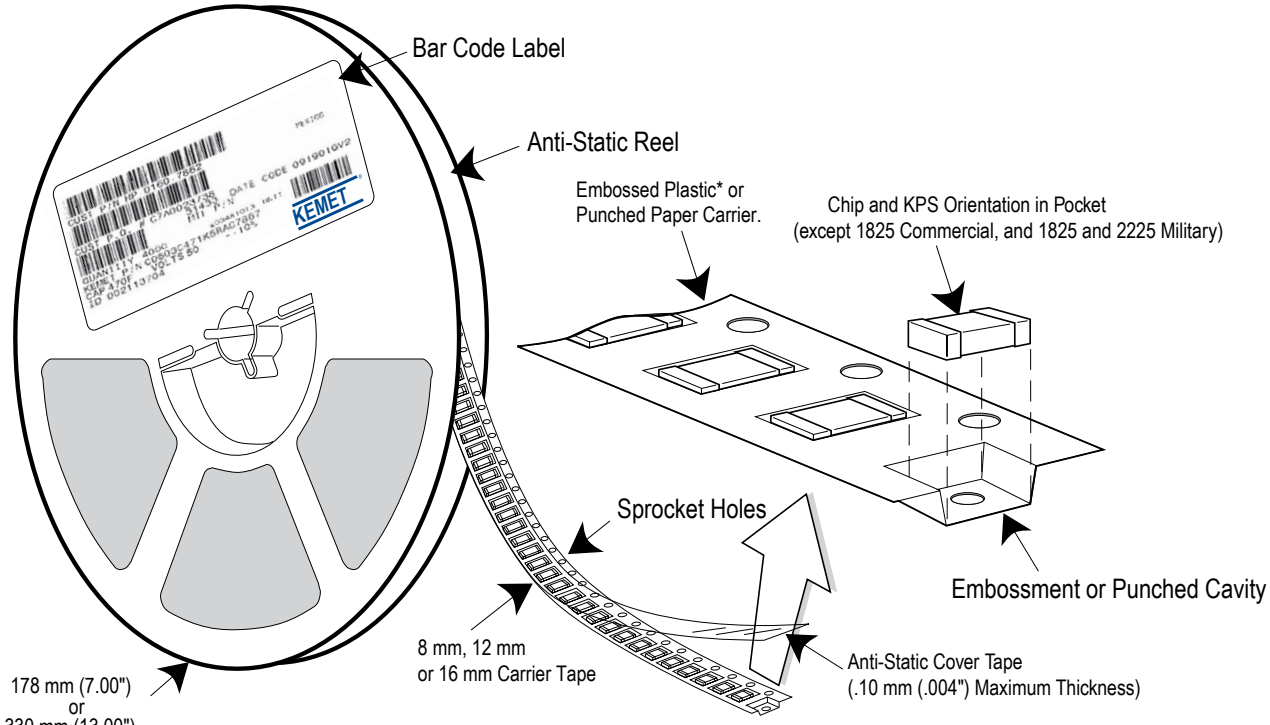

*EIA 01005, 0201, 0402 and 0603 case sizes available on punched paper carrier only.

Table 5 – Carrier Tape Configuration, Embossed Plastic & Punched Paper (mm)

EIA Case Size	Tape size (W)*	Embossed Plastic		Punched Paper	
		7" Reel	13" Reel	7" Reel	13" Reel
		Pitch (P_1)*		Pitch (P_1)*	
01005 – 0402	8			2	2
0603	8			4	4
0805	8	4	4	4	4
1206 – 1210	8	4	4	4	4
1805 – 1808	12	4	4		
≥ 1812	12	8	8		
KPS 1210	12	8	8		
KPS 1812 & 2220	16	12	12		
Array 0508 & 0612	8	4	4		

**Refer to Figures 1 & 2 for W and P_1 carrier tape reference locations.*
**Refer to Tables 6 & 7 for tolerance specifications.*

Figure 1 – Embossed (Plastic) Carrier Tape Dimensions

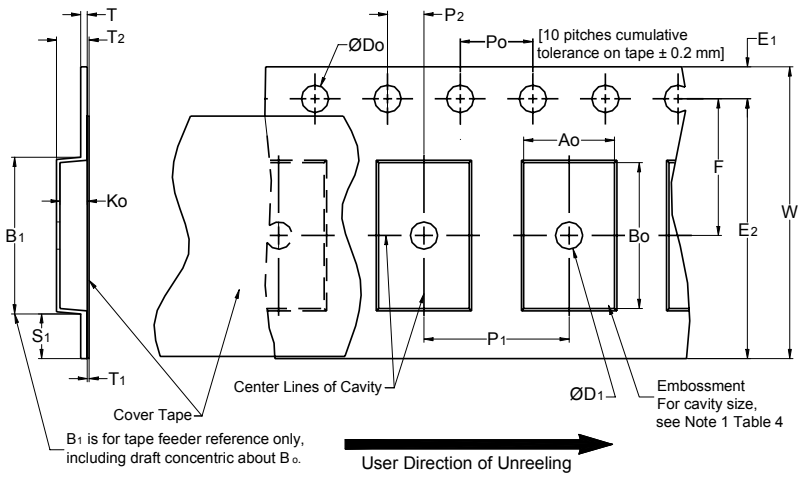

Table 6 – Embossed (Plastic) Carrier Tape Dimensions

Metric will govern

Constant Dimensions — Millimeters (Inches)									
Tape Size	D_0	D_1 Minimum Note 1	E_1	P_0	P_2	R Reference Note 2	S_1 Minimum Note 3	T Maximum	T_1 Maximum
8 mm	1.5 +0.10/-0.0 (0.059 +0.004/-0.0)	1.0 (0.039)	1.75 ±0.10 (0.069 ±0.004)	4.0 ±0.10 (0.157 ±0.004)	2.0 ±0.05 (0.079 ±0.002)	25.0 (0.984)	0.600 (0.024)	0.600 (0.024)	0.100 (0.004)
12 mm		1.5 (0.059)				30 (1.181)			
16 mm									

Variable Dimensions — Millimeters (Inches)								
Tape Size	Pitch	B_1 Maximum Note 4	E_2 Minimum	F	P_1	T_2 Maximum	W Maximum	A_0,B_0 & K_0
8 mm	Single (4 mm)	4.35 (0.171)	6.25 (0.246)	3.5 ±0.05 (0.138 ±0.002)	4.0 ±0.10 (0.157 ±0.004)	2.5 (0.098)	8.3 (0.327)	Note 5
12 mm	Single (4 mm) & Double (8 mm)	8.2 (0.323)	10.25 (0.404)	5.5 ±0.05 (0.217 ±0.002)	8.0 ±0.10 (0.315 ±0.004)	4.6 (0.181)	12.3 (0.484)	
16 mm	Triple (12 mm)	12.1 (0.476)	14.25 (0.561)	7.5 ±0.05 (0.138 ±0.002)	12.0 ±0.10 (0.157 ±0.004)	4.6 (0.181)	16.3 (0.642)	

1. The embossment hole location shall be measured from the sprocket hole controlling the location of the embossment. Dimensions of embossment location and hole location shall be applied independent of each other.
2. The tape with or without components shall pass around R without damage (see Figure 6).
3. If S_1 < 1.0 mm, there may not be enough area for cover tape to be properly applied (see EIA Standard 481 paragraph 4.3 section b).
4. B_1 dimension is a reference dimension for tape feeder clearance only.
5. The cavity defined by A_0, B_0 and K_0 shall surround the component with sufficient clearance that:
(a) the component does not protrude above the top surface of the carrier tape.
(b) the component can be removed from the cavity in a vertical direction without mechanical restriction, after the top cover tape has been removed.
(c) rotation of the component is limited to 20° maximum for 8 and 12 mm tapes and 10° maximum for 16 mm tapes (see Figure 3).
(d) lateral movement of the component is restricted to 0.5 mm maximum for 8 and 12 mm wide tape and to 1.0 mm maximum for 16 mm tape (see Figure 4).
(e) for KPS Series product, A_0 and B_0 are measured on a plane 0.3 mm above the bottom of the pocket.
(f) see Addendum in EIA Standard 481 for standards relating to more precise taping requirements.

Figure 2 – Punched (Paper) Carrier Tape Dimensions

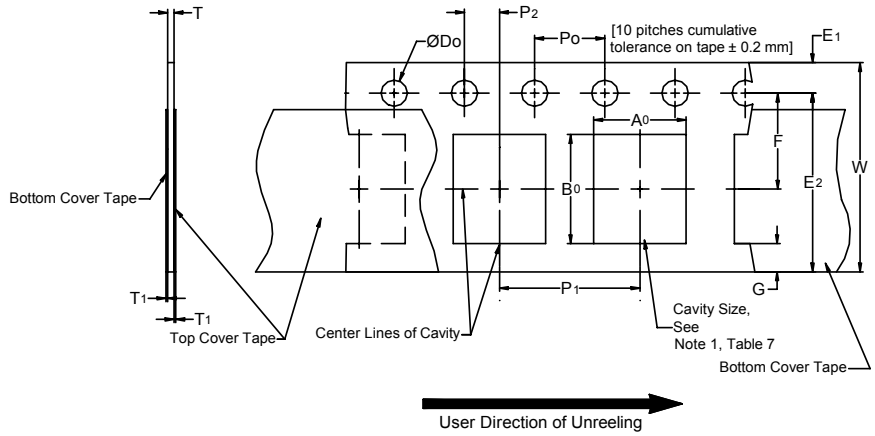

Table 7 – Punched (Paper) Carrier Tape Dimensions

Metric will govern

Constant Dimensions — Millimeters (Inches)							
Tape Size	D_0	E_1	P_0	P_2	T_1 Maximum	G Minimum	R Reference Note 2
8 mm	1.5 +0.10 -0.0 (0.059 +0.004 -0.0)	1.75 ±0.10 (0.069 ±0.004)	4.0 ±0.10 (0.157 ±0.004)	2.0 ±0.05 (0.079 ±0.002)	0.10 (0.004) Maximum	0.75 (0.030)	25 (0.984)

Variable Dimensions — Millimeters (Inches)							
Tape Size	Pitch	E2 Minimum	F	P_1	T Maximum	W Maximum	A_0 B_0
8 mm	Half (2 mm)	6.25 (0.246)	3.5 ±0.05 (0.138 ±0.002)	2.0 ±0.05 (0.079 ±0.002)	1.1 (0.098)	8.3 (0.327)	Note 1
8 mm	Single (4 mm)			4.0 ±0.10 (0.157 ±0.004)		8.3 (0.327)	

1. The cavity defined by A_0, B_0 and T shall surround the component with sufficient clearance that:
a) the component does not protrude beyond either surface of the carrier tape.
b) the component can be removed from the cavity in a vertical direction without mechanical restriction, after the top cover tape has been removed.
c) rotation of the component is limited to 20° maximum (see Figure 3).
d) lateral movement of the component is restricted to 0.5 mm maximum (see Figure 4).
e) see Addendum in EIA Standard 481 for standards relating to more precise taping requirements.
2. The tape with or without components shall pass around R without damage (see Figure 6).

Packaging Information Performance Notes

1. Cover Tape Break Force: 1.0 Kg minimum.
2. Cover Tape Peel Strength: The total peel strength of the cover tape from the carrier tape shall be:

Tape Width	Peel Strength
8 mm	0.1 to 1.0 Newton (10 to 100 gf)
12 and 16 mm	0.1 to 1.3 Newton (10 to 130 gf)

The direction of the pull shall be opposite the direction of the carrier tape travel. The pull angle of the carrier tape shall be 165° to 180° from the plane of the carrier tape. During peeling, the carrier and/or cover tape shall be pulled at a velocity of 300 ±10 mm/minute.
3. Labeling: Bar code labeling (standard or custom) shall be on the side of the reel opposite the sprocket holes. *Refer to EIA Standards 556 and 624.*

Figure 3 – Maximum Component Rotation

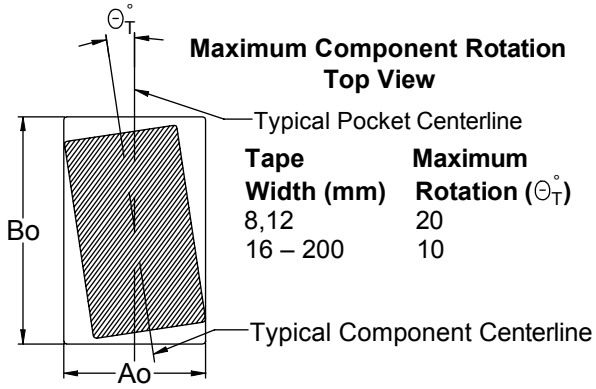

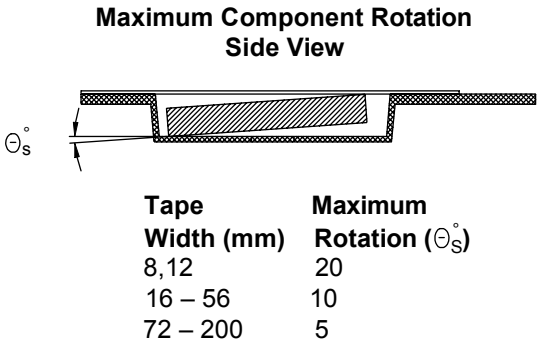

Figure 4 – Maximum Lateral Movement

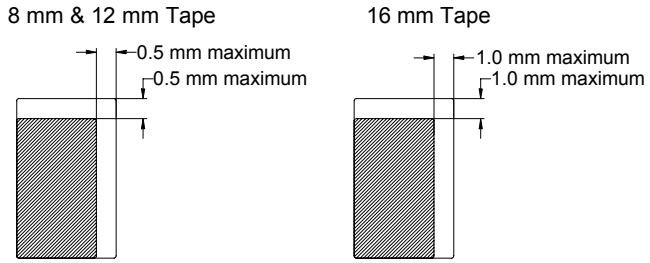

Figure 5 – Bending Radius

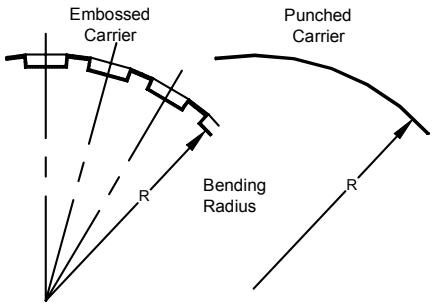

Figure 6 – Reel Dimensions

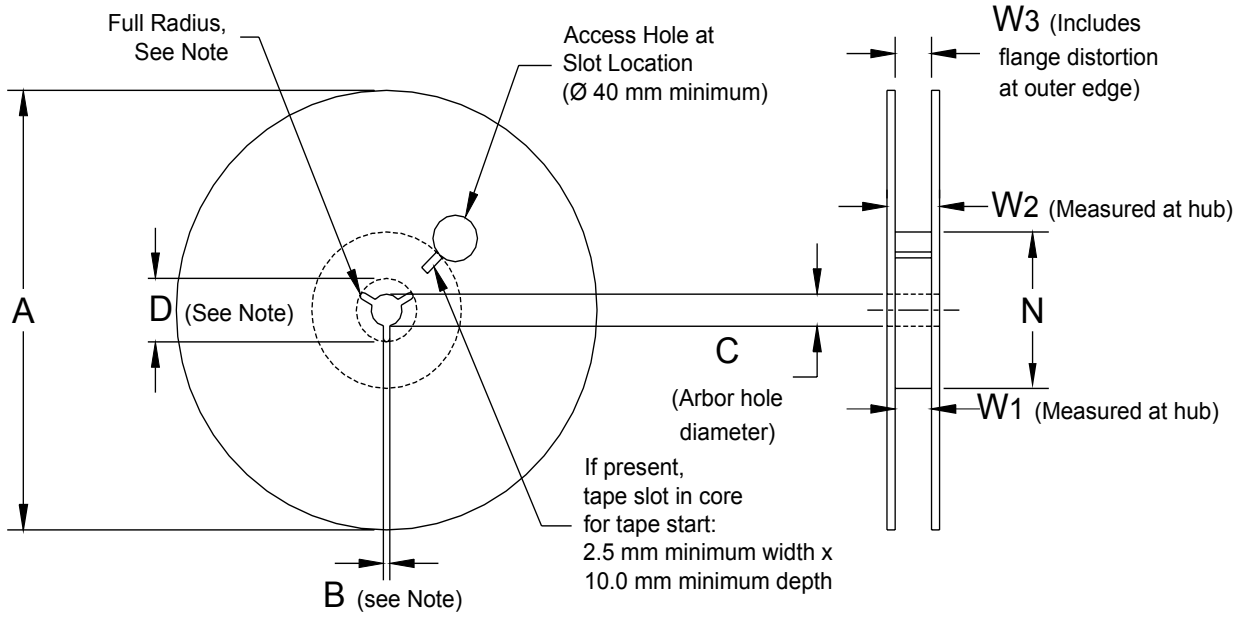

Note: Drive spokes optional; if used, dimensions B and D shall apply.

Table 8 – Reel Dimensions

Metric will govern

Constant Dimensions — Millimeters (Inches)				
Tape Size	A	B Minimum	C	D Minimum
8 mm	178 ±0.20 (7.008 ±0.008) or 330 ±0.20 (13.000 ±0.008)	1.5 (0.059)	13.0 +0.5/-0.2 (0.521 +0.02/-0.008)	20.2 (0.795)
12 mm				
16 mm				

Variable Dimensions — Millimeters (Inches)				
Tape Size	N Minimum	W_1	W_2 Maximum	W_3
8 mm	50 (1.969)	8.4 +1.5/-0.0 (0.331 +0.059/-0.0)	14.4 (0.567)	Shall accommodate tape width without interference
12 mm		12.4 +2.0/-0.0 (0.488 +0.078/-0.0)	18.4 (0.724)	
16 mm		16.4 +2.0/-0.0 (0.646 +0.078/-0.0)	22.4 (0.882)	

Figure 7 – Tape Leader & Trailer Dimensions

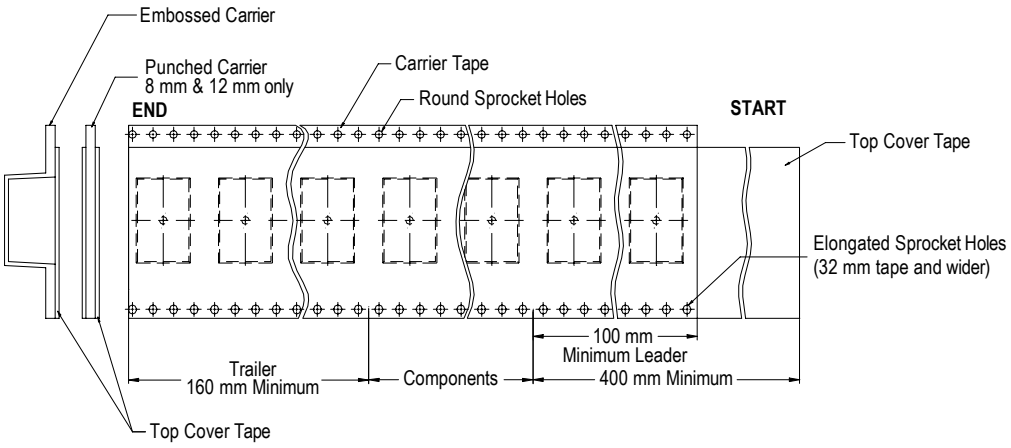

Figure 8 – Maximum Camber

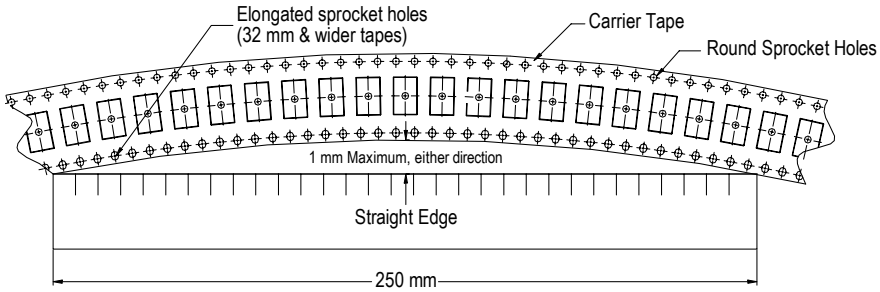

Bulk Cassette Packaging (Ceramic Chips Only)

Meets Dimensional Requirements IEC–286 and EIAJ 7201

*Unit mm *Reference*

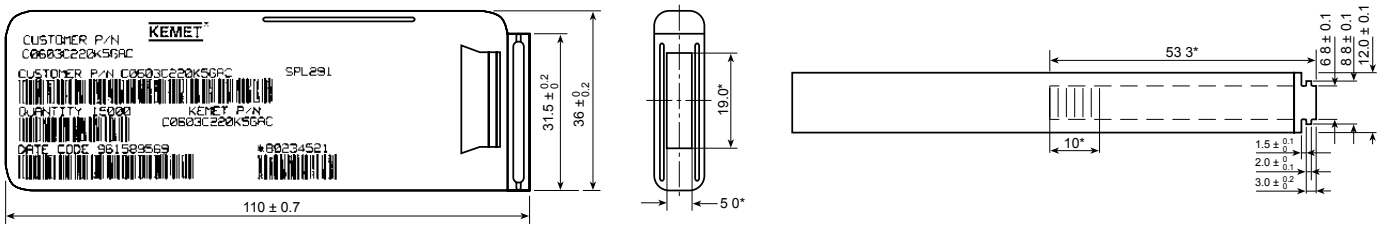

Capacitor Dimensions for Bulk Cassette

Cassette Packaging – Millimeters

EIA Size Code	Metric Size Code	L Length	W Width	B Bandwidth	S Separation Minimum	T Thickness	Number of Pieces/Cassette
0402	1005	1.0 ±0.05	0.5 ±0.05	0.2 to 0.4	0.3	0.5 ±0.05	50,000
0603	1608	1.6 ±0.07	0.8 ±0.07	0.2 to 0.5	0.7	0.8 ±0.07	15,000

KEMET Corporation World Headquarters

2835 KEMET Way
Simpsonville, SC 29681

Mailing Address:
P.O. Box 5928
Greenville, SC 29606

www.kemet.com
Tel: 864-963-6300
Fax: 864-963-6521

Corporate Offices
Fort Lauderdale, FL
Tel: 954-766-2800

North America

Southeast
Lake Mary, FL
Tel: 407-855-8886

Northeast
Wilmington, MA
Tel: 978-658-1663

Central
Novi, MI
Tel: 248-994-1030

West
Milpitas, CA
Tel: 408-433-9950

Mexico
Guadalajara, Jalisco
Tel: 52-33-3123-2141

Europe

Southern Europe
Sasso Marconi, Italy
Tel: 39-051-939111

Skopje, Macedonia
Tel: 389-2-55-14-623

Central Europe
Landsberg, Germany
Tel: 49-8191-3350800

Kamen, Germany
Tel: 49-2307-438110

Northern Europe
Wyboston, United Kingdom
Tel: 44-1480-273082

Espoo, Finland
Tel: 358-9-5406-5000

Asia

Northeast Asia
Hong Kong
Tel: 852-2305-1168

Shenzhen, China
Tel: 86-755-2518-1306

Beijing, China
Tel: 86-10-5877-1075

Shanghai, China
Tel: 86-21-6447-0707

Seoul, South Korea
Tel: 82-2-6294-0550

Taipei, Taiwan
Tel: 886-2-27528585

Southeast Asia
Singapore
Tel: 65-6701-8033

Penang, Malaysia
Tel: 60-4-6430200

Bangalore, India
Tel: 91-806-53-76817

Note: KEMET reserves the right to modify minor details of internal and external construction at any time in the interest of product improvement. KEMET does not assume any responsibility for infringement that might result from the use of KEMET Capacitors in potential circuit designs. KEMET is a registered trademark of KEMET Electronics Corporation.

Disclaimer

All product specifications, statements, information and data (collectively, the "Information") in this datasheet are subject to change. The customer is responsible for checking and verifying the extent to which the Information contained in this publication is applicable to an order at the time the order is placed.

All Information given herein is believed to be accurate and reliable, but it is presented without guarantee, warranty, or responsibility of any kind, expressed or implied.

Statements of suitability for certain applications are based on KEMET Electronics Corporation's ("KEMET") knowledge of typical operating conditions for such applications, but are not intended to constitute – and KEMET specifically disclaims – any warranty concerning suitability for a specific customer application or use. The Information is intended for use only by customers who have the requisite experience and capability to determine the correct products for their application. Any technical advice inferred from this Information or otherwise provided by KEMET with reference to the use of KEMET's products is given gratis, and KEMET assumes no obligation or liability for the advice given or results obtained.

Although KEMET designs and manufactures its products to the most stringent quality and safety standards, given the current state of the art, isolated component failures may still occur. Accordingly, customer applications which require a high degree of reliability or safety should employ suitable designs or other safeguards (such as installation of protective circuitry or redundancies) in order to ensure that the failure of an electrical component does not result in a risk of personal injury or property damage.

Although all product–related warnings, cautions and notes must be observed, the customer should not assume that all safety measures are indicted or that other measures may not be required.