3 PHASE BUSBAR - 1/2 pole spacing

18mm² for 80A / 25mm² for 100A

Altech Corp.®

UL508 listed
E205412

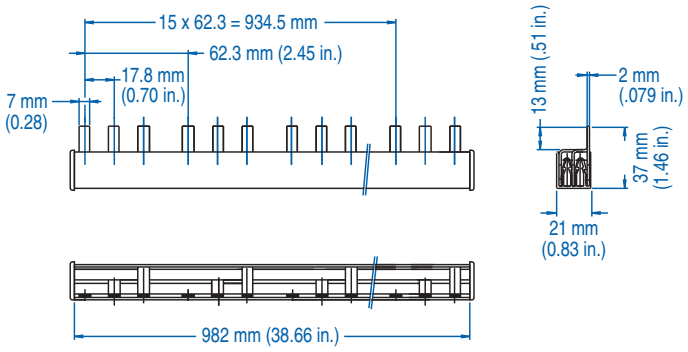

18mm² for 80A				25mm² for 100A			
Type/ Cat. No.	No. of Pins	No. of MMC to Jumper	Length [mm]	Type/ Cat. No.	No. of Pins	No. of MMC to Jumper	Length [mm]
3P18U3H/6	6	2x3 pole	110.8	3P25U3H/6	6	2x3 pole	110.8
3P18U3H/9	9	3x3 pole	173.1	3P25U3H/9	9	3x3 pole	173.1
3P18U3H/12	12	4x3 pole	235.4	3P25U3H/12	12	4x3 pole	235.4
3P18U3H/15	15	5x3 pole	297.7	3P25U3H/15	15	5x3 pole	297.7
3P18U3H/18	18	6x3 pole	360.0	3P25U3H/18	18	6x3 pole	360.0
3P18U3H/21	21	7x3 pole	422.3	3P25U3H/21	21	7x3 pole	422.3
3P18U3H/24	24	8x3 pole	484.6	3P25U3H/24	24	8x3 pole	484.6
3P18U3H/27	27	9x3 pole	546.9	3P25U3H/27	27	9x3 pole	546.9
3P18U3H/30	30	10x3 pole	609.2	3P25U3H/30	30	10x3 pole	609.2
3P18U3H/33	33	11x3 pole	671.5	3P25U3H/33	33	11x3 pole	671.5
3P18U3H/36	36	12x3 pole	733.8	3P25U3H/36	36	12x3 pole	733.8
3P18U3H/39	39	13x3 pole	796.1	3P25U3H/39	39	13x3 pole	796.1
3P18U3H/42	42	14x3 pole	858.4	3P25U3H/42	42	14x3 pole	858.4
3P18U3H/45	45	15x3 pole	920.7	3P25U3H/45	45	15x3 pole	920.7
3P18U3H/48	48	16x3 pole	983.0	3P25U3H/48	48	16x3 pole	983.0
3P18U3H/51	51	17x3 pole	1045.3	3P25U3H/51	51	17x3 pole	1045.3
3P18U3H/54	54	18x3 pole	1107.6	3P25U3H/54	54	18x3 pole	1107.6
3P18U3H/57	57	19x3 pole	1169.9	3P25U3H/57	57	19x3 pole	1169.9

ACCESSORIES

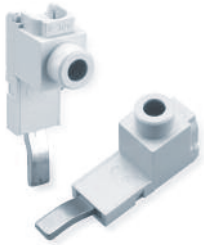

Type/Cat. No:	P50UT	P50UB
Description:	Power Feed Lug	Modular Direct Power Feed

Type/Cat. No:	BRS5	18/25CAP3P
Description:	Insulation Cap	End Cap

Altech UL1077

Altech UL508