# 3 PHASE BUSBAR - 1/2 pole spacing

18mm² for 80A / 25mm² for 100A

Altech Corp.®

UL508 listed
E205412

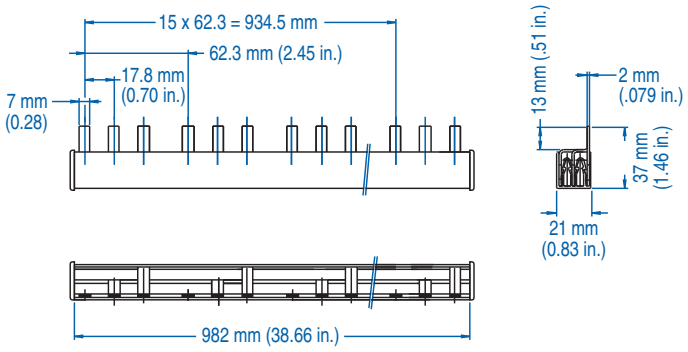


| 18mm² for 80A | | | | 25mm² for 100A | | | |
|---|---|---|---|---|---|---|---|
| Type/ Cat. No. | No. of Pins | No. of MMC to Jumper | Length [mm] | Type/ Cat. No. | No. of Pins | No. of MMC to Jumper | Length [mm] |
| 3P18U3H/6 | 6 | 2x3 pole | 110.8 | 3P25U3H/6 | 6 | 2x3 pole | 110.8 |
| 3P18U3H/9 | 9 | 3x3 pole | 173.1 | 3P25U3H/9 | 9 | 3x3 pole | 173.1 |
| 3P18U3H/12 | 12 | 4x3 pole | 235.4 | 3P25U3H/12 | 12 | 4x3 pole | 235.4 |
| 3P18U3H/15 | 15 | 5x3 pole | 297.7 | 3P25U3H/15 | 15 | 5x3 pole | 297.7 |
| 3P18U3H/18 | 18 | 6x3 pole | 360.0 | 3P25U3H/18 | 18 | 6x3 pole | 360.0 |
| 3P18U3H/21 | 21 | 7x3 pole | 422.3 | 3P25U3H/21 | 21 | 7x3 pole | 422.3 |
| 3P18U3H/24 | 24 | 8x3 pole | 484.6 | 3P25U3H/24 | 24 | 8x3 pole | 484.6 |
| 3P18U3H/27 | 27 | 9x3 pole | 546.9 | 3P25U3H/27 | 27 | 9x3 pole | 546.9 |
| 3P18U3H/30 | 30 | 10x3 pole | 609.2 | 3P25U3H/30 | 30 | 10x3 pole | 609.2 |
| 3P18U3H/33 | 33 | 11x3 pole | 671.5 | 3P25U3H/33 | 33 | 11x3 pole | 671.5 |
| 3P18U3H/36 | 36 | 12x3 pole | 733.8 | 3P25U3H/36 | 36 | 12x3 pole | 733.8 |
| 3P18U3H/39 | 39 | 13x3 pole | 796.1 | 3P25U3H/39 | 39 | 13x3 pole | 796.1 |
| 3P18U3H/42 | 42 | 14x3 pole | 858.4 | 3P25U3H/42 | 42 | 14x3 pole | 858.4 |
| 3P18U3H/45 | 45 | 15x3 pole | 920.7 | 3P25U3H/45 | 45 | 15x3 pole | 920.7 |
| 3P18U3H/48 | 48 | 16x3 pole | 983.0 | 3P25U3H/48 | 48 | 16x3 pole | 983.0 |
| 3P18U3H/51 | 51 | 17x3 pole | 1045.3 | 3P25U3H/51 | 51 | 17x3 pole | 1045.3 |
| 3P18U3H/54 | 54 | 18x3 pole | 1107.6 | 3P25U3H/54 | 54 | 18x3 pole | 1107.6 |
| 3P18U3H/57 | 57 | 19x3 pole | 1169.9 | 3P25U3H/57 | 57 | 19x3 pole | 1169.9 |

## ACCESSORIES

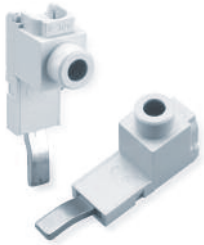

| Type/Cat. No: | P50UT | P50UB |
|---|---|---|
| Description: | Power Feed Lug | Modular Direct Power Feed |

| Type/Cat. No: | BRS5 | 18/25CAP3P |
|---|---|---|
| Description: | Insulation Cap | End Cap |

Altech UL1077

Altech UL508